Mechanical Engineering Summary

For job interviews

Content

1. Thermodynamics – Page 3
2. Fluid Mechanics – Page 34
3. Pumping Machinery – Page 64
4. Heat Transfer – Page 133
5. Heat Exchangers – Page 149
6. Material Science – Page 185
7. Manufacturing Processes – Page 221
8. Machine Design – Page 240
9. Electromechanical Devices – Page 253
10. General Questions – Page 266

Thermodynamics

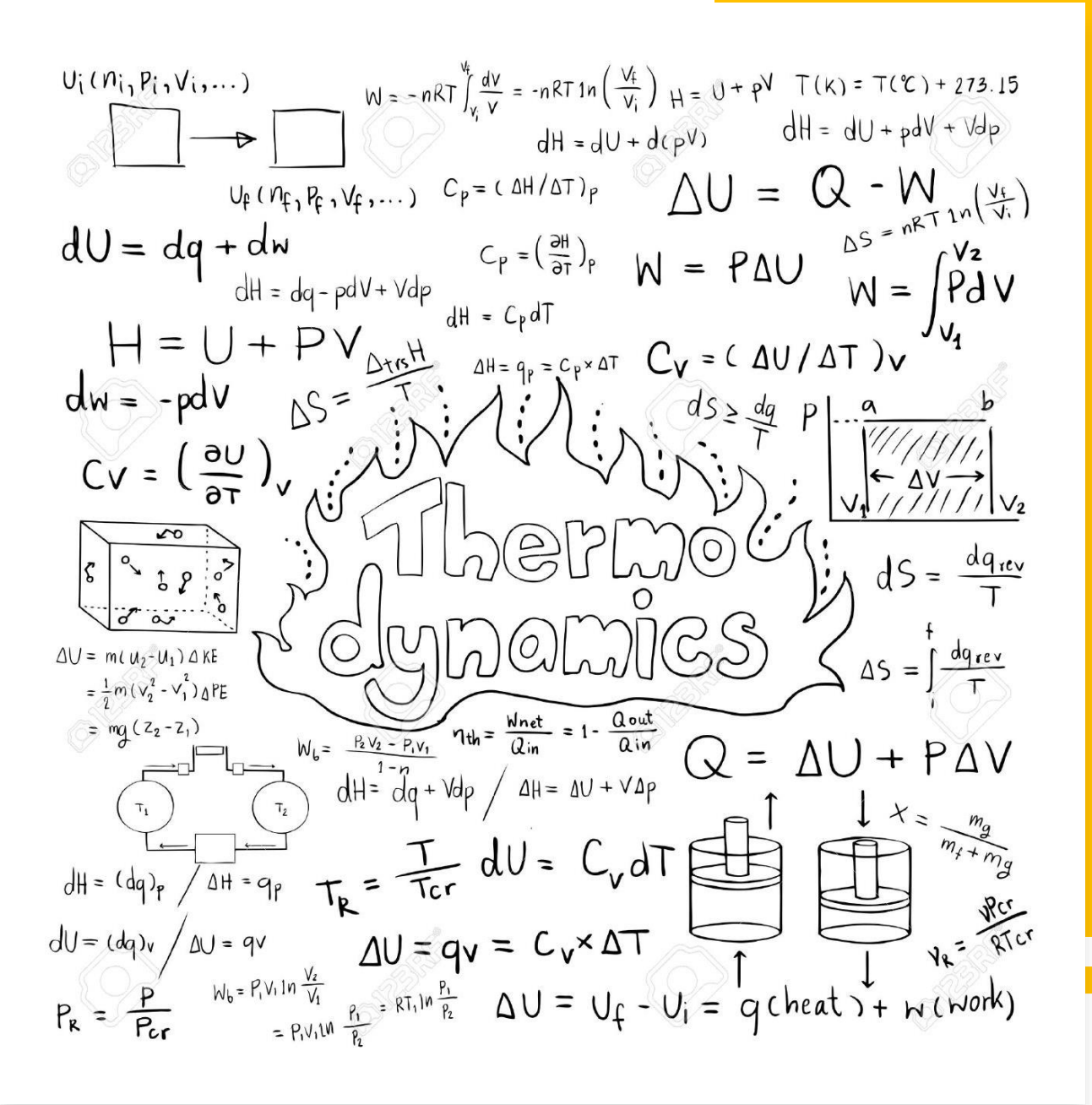

What is Thermodynamics?

- **It is the science that relate energy (work and heat) to the change of system properties.**

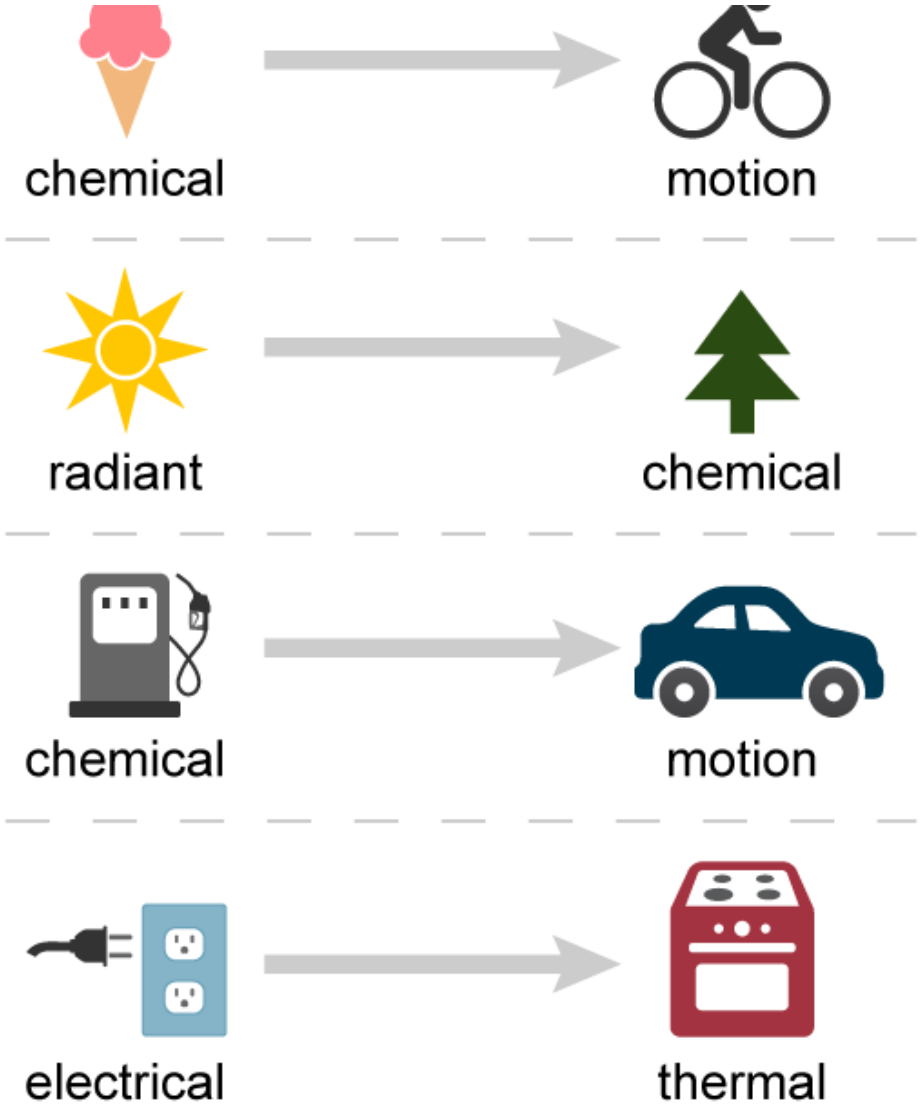

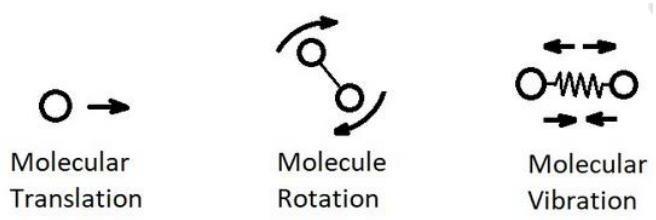

What is Internal Energy?

The internal energy is the energy contained within the system.

It consists of :

1. **Sensible component**: which accounts for the translational, rotational, and/or vibrational motion of the atoms/molecules.
2. **Latent component**: which relates to intermolecular forces influencing phase change between solid, liquid, and vapor states.
3. **Chemical component:** which accounts for energy stored in the chemical bonds between atoms.
4. **Nuclear component**: which relates to the strong bonds within the nucleus of the atom itself.

What is Enthalpy?

$$H = U + pV$$

What is the 0th law ?

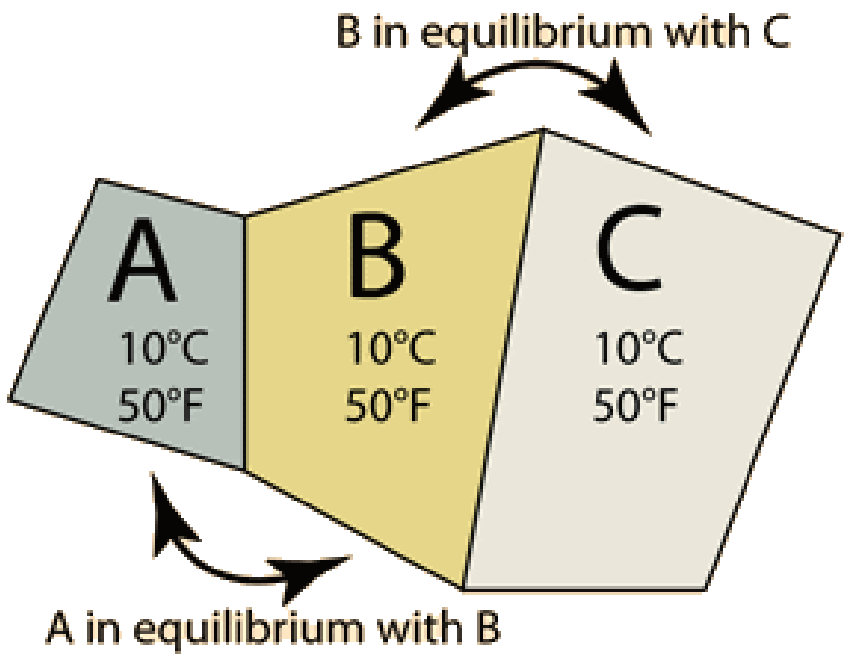

- **The zeroth law** says that when two objects are individually in thermal equilibrium with a third object, then they are also in equilibrium with each other.

What is the 1st law of thermodynamics?

- The first law of thermodynamics is a version of the law of conservation of energy.
- The First Law of Thermodynamics states that energy cannot be created or destroyed - only converted from one form of energy to another.
- The example is the **internal combustion engine**.
- The chemical energy (fuel air mixture) & the heat (ignition) are converted into mechanical work and some useless forms of energy (heat coming out).

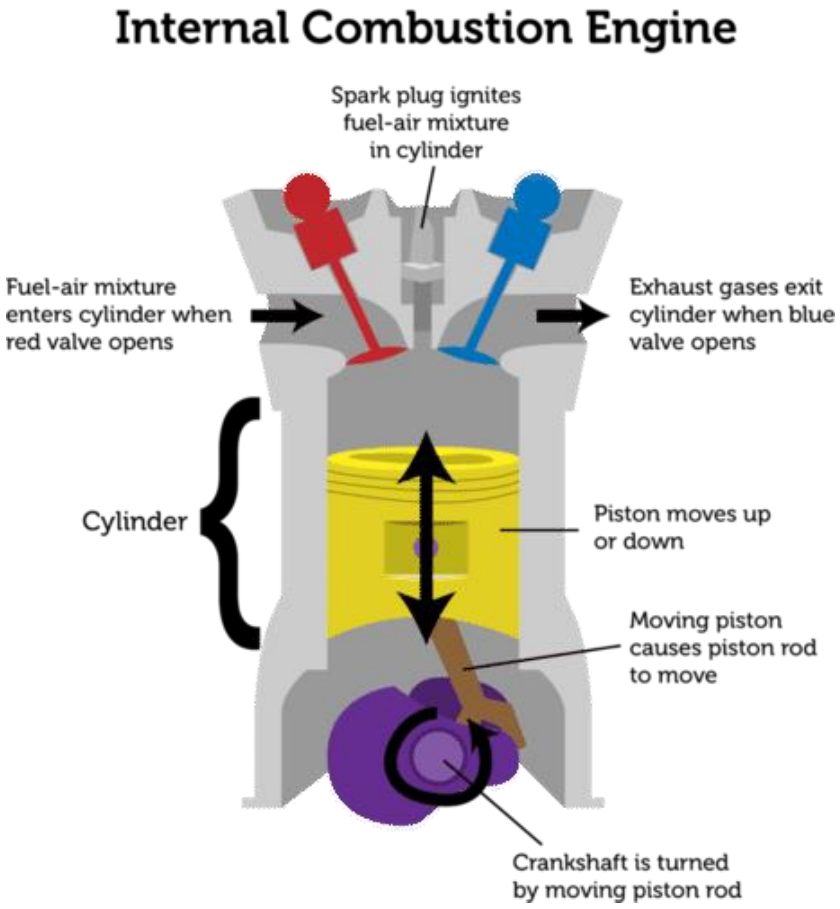

What is the equation of the 1st law of thermodynamics?

$$\Delta E_{12} = {}_1Q_2 - {}_1W_2$$

$${}_1Q_2 = \Delta E_2 + {}_1W_2$$

$$\boxed{{}_1Q_2 = m\left(u_2 + \frac{v_2^2}{2} + gz_2\right) - m\left(u_1 + \frac{v_1^2}{2} + gz_1\right) + {}_1W_2}$$

$$\boxed{\dot{Q}_{cv} = \sum \dot{m}_e \left(h_e + \frac{v_e^2}{2} + gz_e\right) - \sum \dot{m}_i \left(h_i + \frac{v_i^2}{2} + gz_i\right) + \dot{W}_{cv}}$$

What is the 2nd law of thermodynamics?

- The Second Law of Thermodynamics is about the **quality** of energy.
- It states that as energy is transferred or transformed, more and more of it is wasted.
- It's why engineers still can't make a perfectly efficient machine.
- It also states that the entropy of an isolated system is always increasing.
- The more entropy we generate, the less energy is leftover to do useful work.

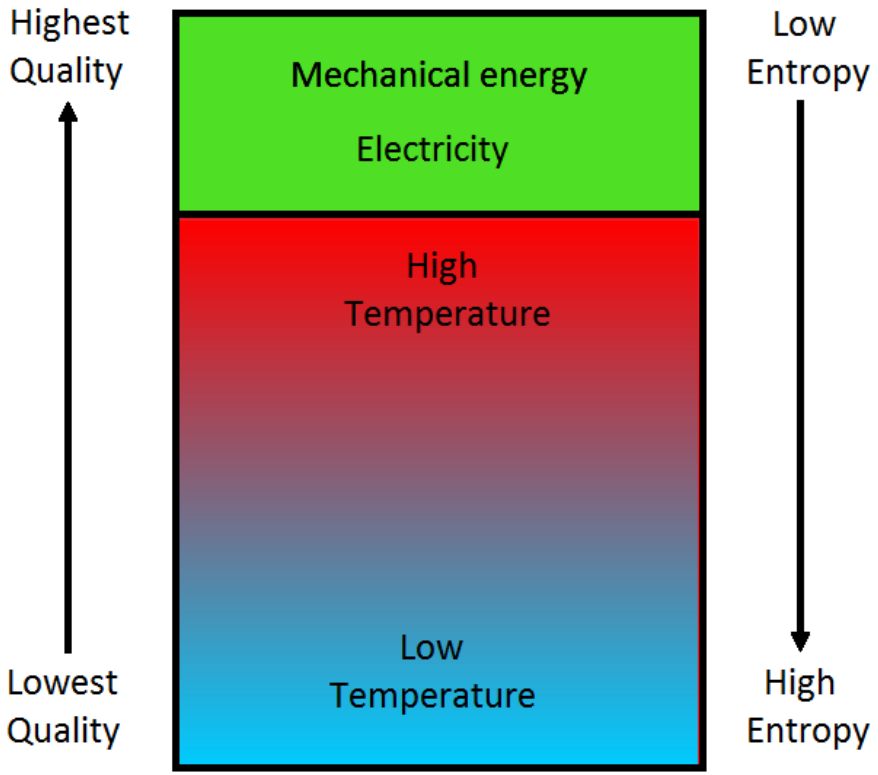

What is entropy?

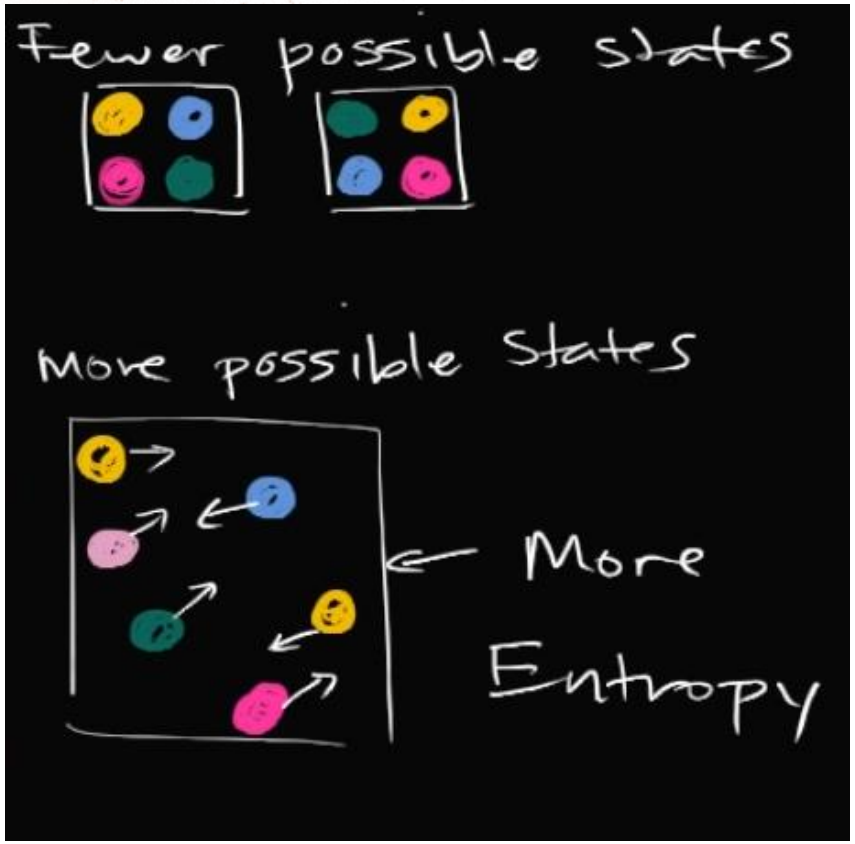

- **Entropy** is the disorder of a system.
- The disorder relates to the number of possible states that a system can take on.

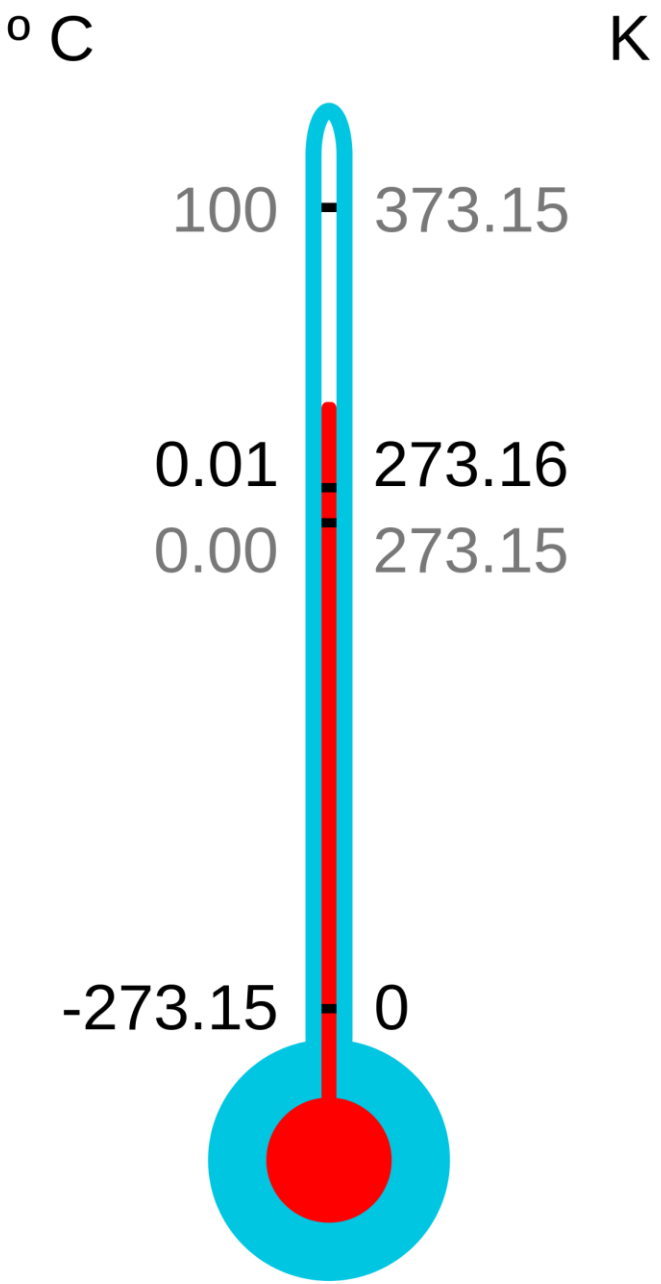

What is the 3rd law of thermodynamics?

- It is **impossible** to lower the temperature of **any system** to **absolute zero** in a finite number of steps.

Can you explain the Carnot cycle?

- **Carnot cycle** is a reversible cycle (consists entirely of reversible processes) and is the most efficient cycle.
- **Reversible cycles** cannot be achieved in practice because of the irreversibilities:
  - Friction.
  - Mixing of Two Fluids.
  - Heat Transfer.
  - Plastic Deformation of Solids.
  - Chemical Reactions.

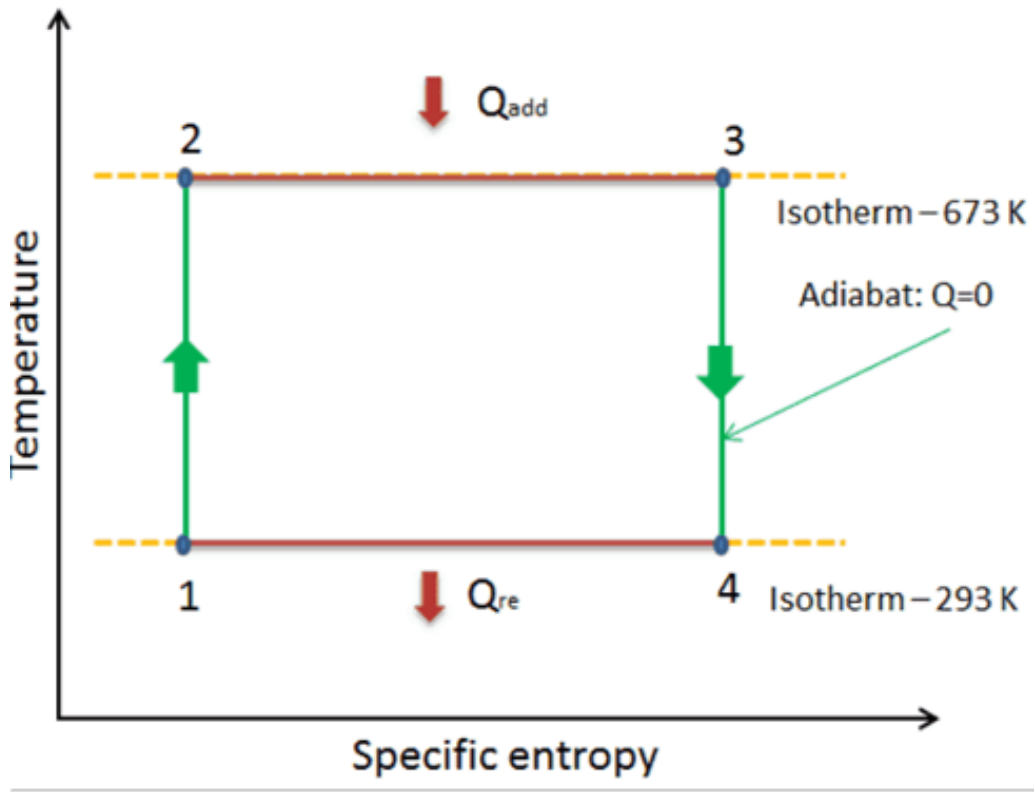

What is the difference between the efficiencies in both laws?

$$\eta_{\text{th,rev}} = 1 - \frac{T_L}{T_H}$$

First-law efficiency

Thermal efficiency is a measure of the performance of a heat engine.

Second-law efficiency :

- The ratio of the actual thermal efficiency to the Carnot efficiency under the same conditions.
  - **Carnot efficiency** is the highest efficiency a heat engine.
- For example, the maximum efficiency of a steam power plant operating between TH = 1000 K and TL = 300 K is 70%.
- While an actual efficiency of 40%.

$$\eta_{\text{II}} = \frac{\eta_{\text{th}}}{\eta_{\text{th,rev}}}$$

$$\text{Thermal efficiency} = \frac{\text{Net work output}}{\text{Total heat input}}$$

$$\eta_{\text{th}} = \frac{W_{\text{net,out}}}{Q_{\text{in}}}$$

Draw & Explain the Refrigeration cycle.

A refrigerant, which is a substance moved repeatedly in these four components, should have some important characteristics such as low flammability, low toxicity, and low boiling point.

1. The evaporator is responsible to cool the refrigerated space. To do so, the refrigerant need to be a **cold mix of liquid and gas** in the inlet of the evaporator.
2. As the refrigerant moves through the evaporator coil, the refrigerant become a **cool gas** in the outlet of the evaporator.
3. The remaining stages are responsible to bring the refrigerant back to this desired state.
4. Then the compressor converts the cool gas/vapor into a **very hot and high-pressure vapor**.
5. The condenser is responsible for converting the refrigerant **into a hot and high-pressure liquid**.
6. The expansion device is responsible for converting the refrigerant into a **cold mix of liquid and gas**, which is our desired state in the evaporator.

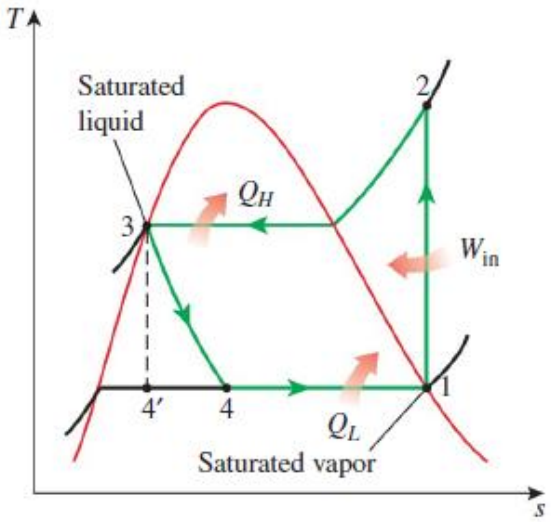

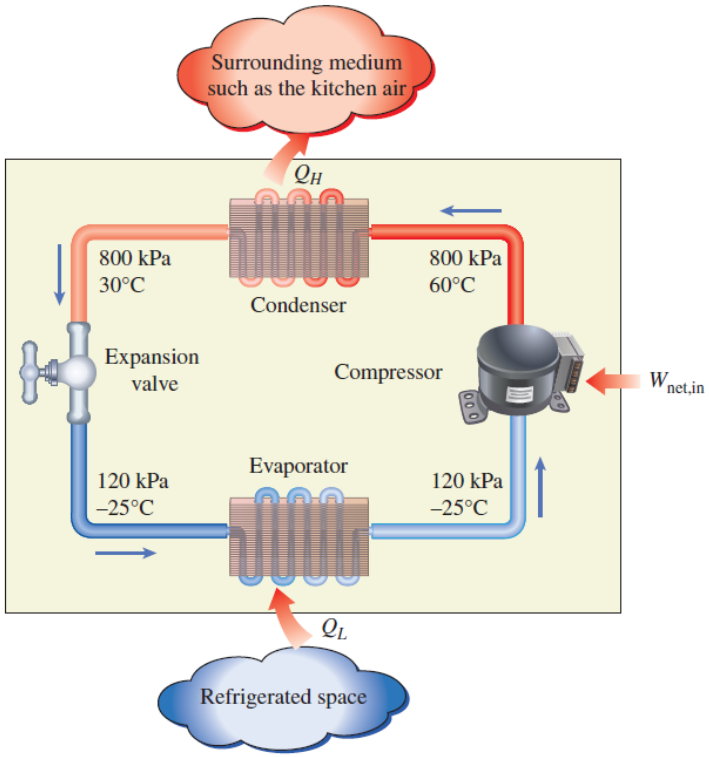

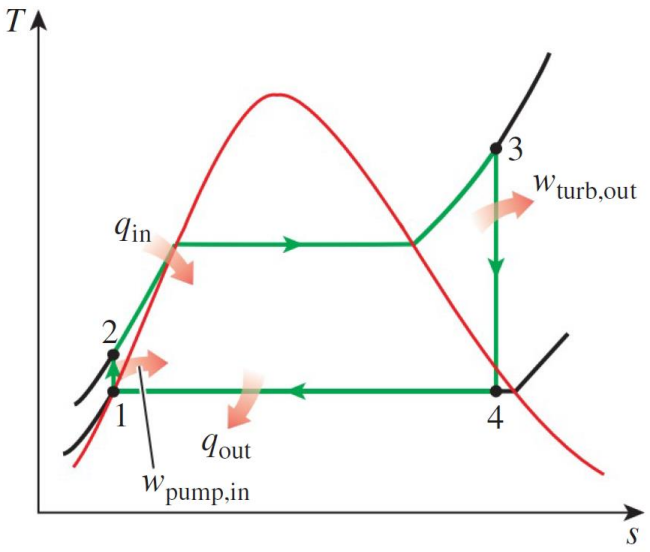

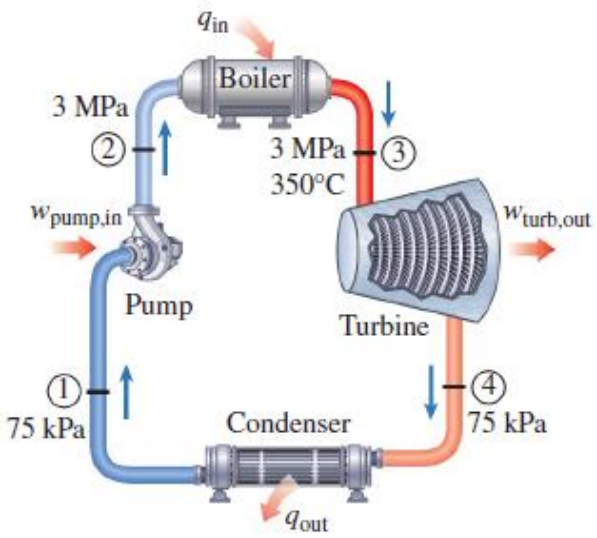

Draw & Explain the Rankin cycle

- Water enters the pump at state 1 as saturated liquid and is compressed isentropically to the operating pressure of the boiler.
- The water temperature increases somewhat during this isentropic compression process due to a slight decrease in the specific volume of water. The vertical distance between states 1 and 2 on the T-s diagram is greatly exaggerated for clarity. (If water were truly incompressible, would there be a temperature change at all during this process?) Water enters the boiler as a compressed liquid at state 2 and leaves as a superheated vapor at state 3.
- The boiler is basically a large heat exchanger where the heat is transferred to the water essentially at constant pressure.
- The superheated vapor at state 3 enters the turbine, where it expands isentropically and produces work by rotating the shaft connected to an electric generator. The pressure and the temperature of steam drop during this process to the values at state 4, where steam enters the condenser. At this state, steam is usually a saturated liquid–vapor mixture with a high quality. Steam is condensed at constant pressure in the condenser, which is basically a large heat exchanger, by rejecting heat to a cooling medium such as a lake, a river, or the atmosphere. Steam leaves the condenser as saturated liquid and enters the pump, completing the cycle.
- These plants can be (a) fossil-fueled, (b) nuclear-fueled, (c) solar thermal, and (d) geothermal.

Draw & Explain the Brayton Cycle

Gas turbines usually operate on an *open cycle.*

1. Fresh air at ambient conditions is drawn into the compressor, where its temperature and pressure are raised.
2. The high-pressure air proceeds into the combustion chamber, where the fuel is burned at constant pressure.
3. The resulting high-temperature gases then enter the turbine, where they expand to the atmospheric pressure while producing power. The exhaust gases leaving the turbine are thrown out.

- The two major application areas of gas-turbine engines are aircraft propulsion and electric power generation.

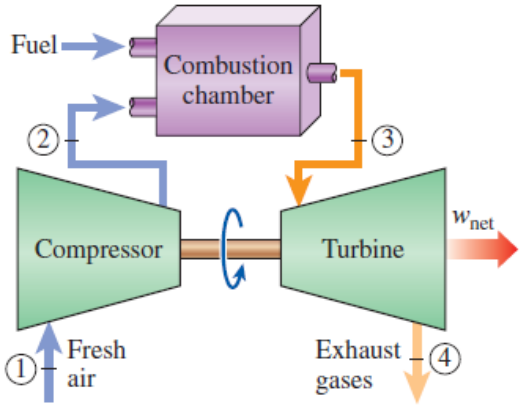

FIGURE 9–29
An open-cycle gas-turbine engine.

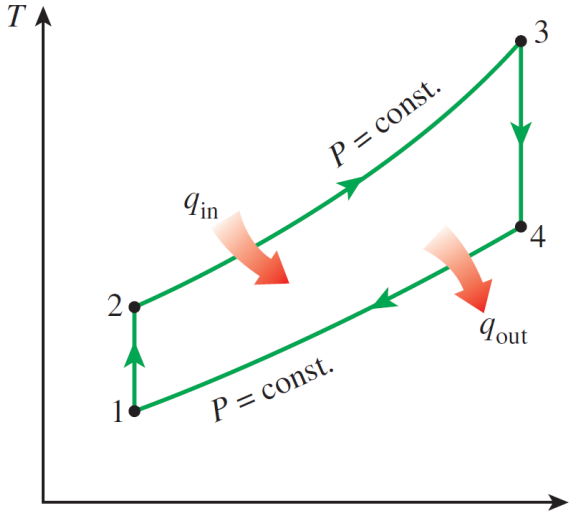

(*a*) *T-s* diagram

What are the stages of jet engine?

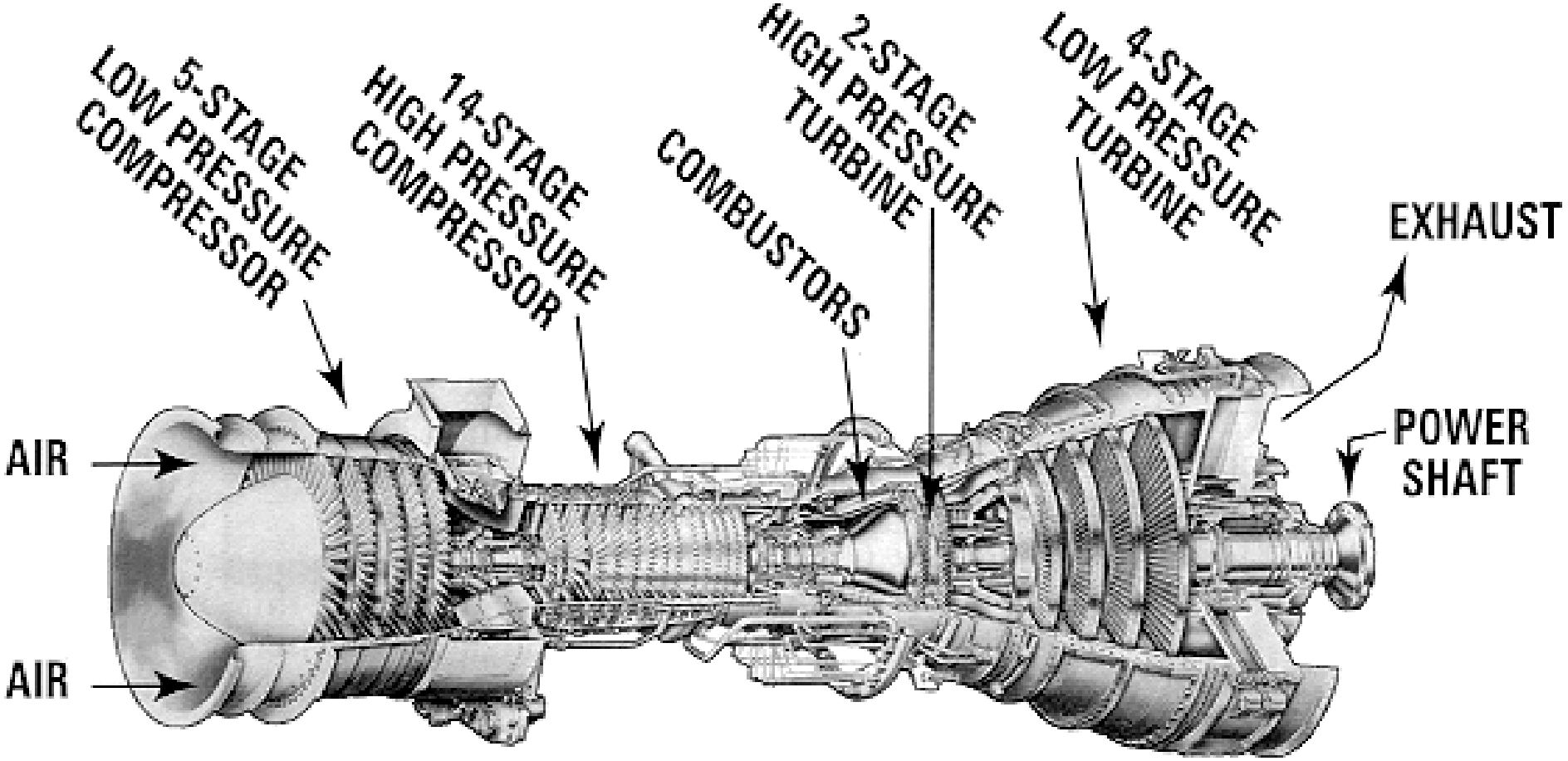

What is the turbine?

- A turbine is a rotary mechanical device that extracts energy from a fluid flow and converts it into useful work.
- Moving fluid acts on the blades so that they move and impart rotational energy to the rotor.

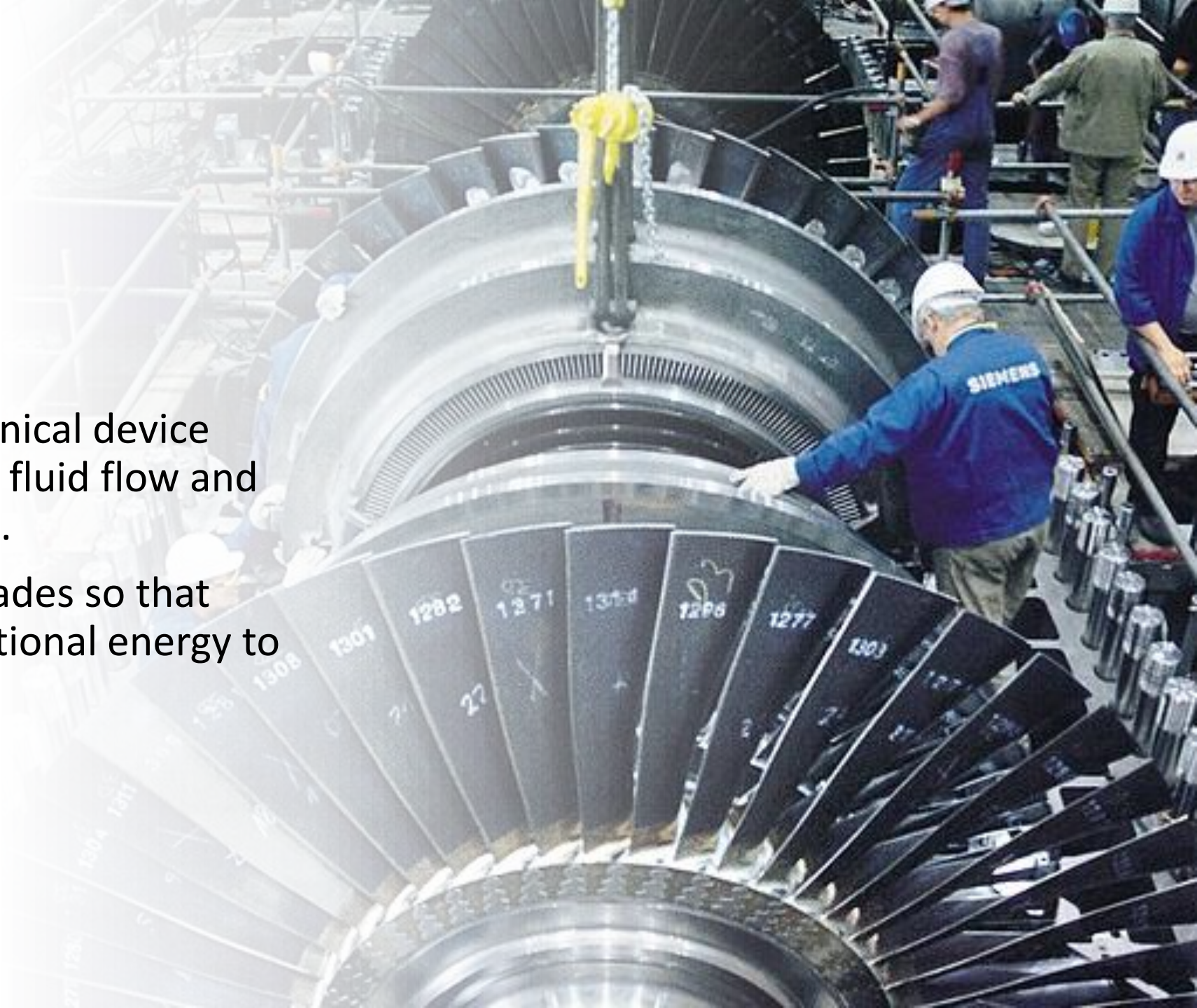

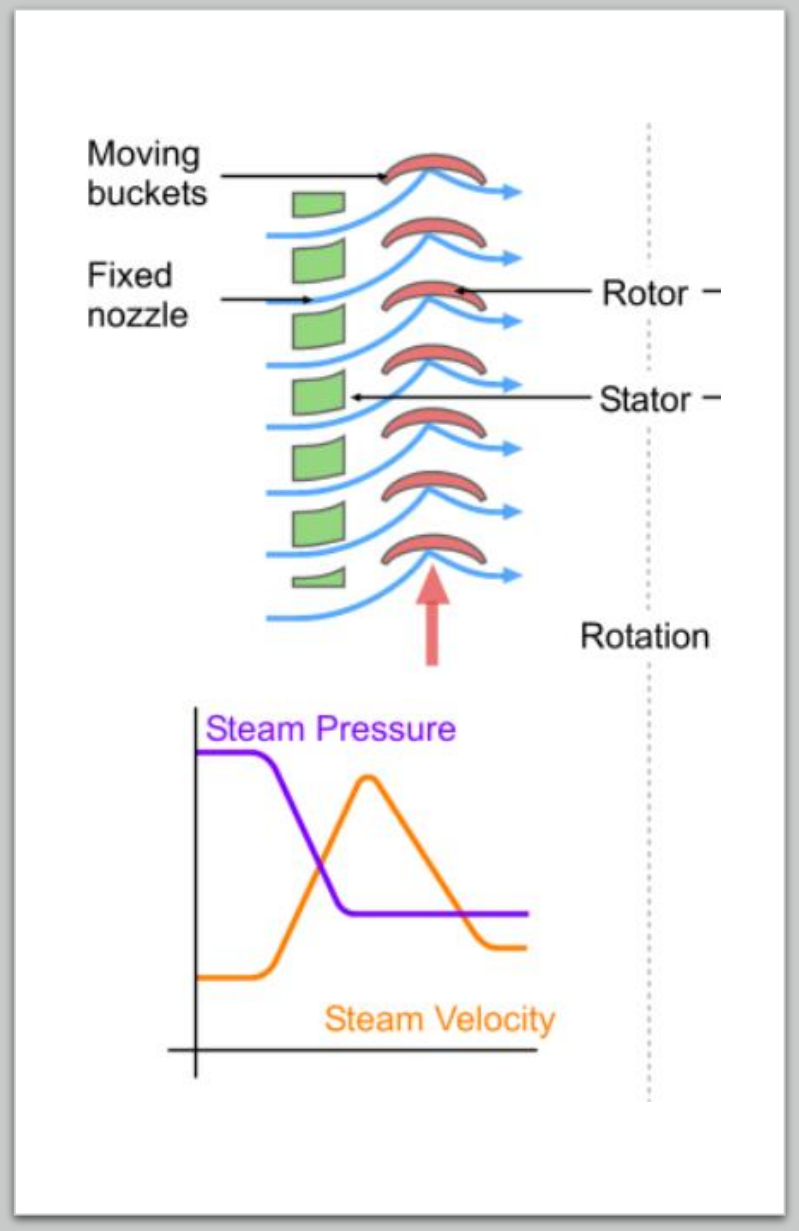

Impulse Principle

- **Impulse turbines** change the direction of flow of a high velocity fluid or gas jet. The resulting impulse spins the turbine and leaves the fluid flow with diminished kinetic energy.
- There is no pressure change of the fluid or gas in the turbine blades (the moving blades), as in the case of a steam or gas turbine, all the pressure drop takes place in the stationary blades (the nozzles). Before reaching the turbine, the fluid's pressure head is changed to velocity head by accelerating the fluid with a nozzle.

Reaction Principle

- **Reaction turbines** develop torque by reacting to the gas or fluid's pressure or mass. The pressure of the gas or fluid changes as it passes through the turbine rotor blades.
- Most steam turbines use this concept.
- Reaction turbines are better suited to higher flow velocities or applications where the fluid head (upstream pressure) is low.

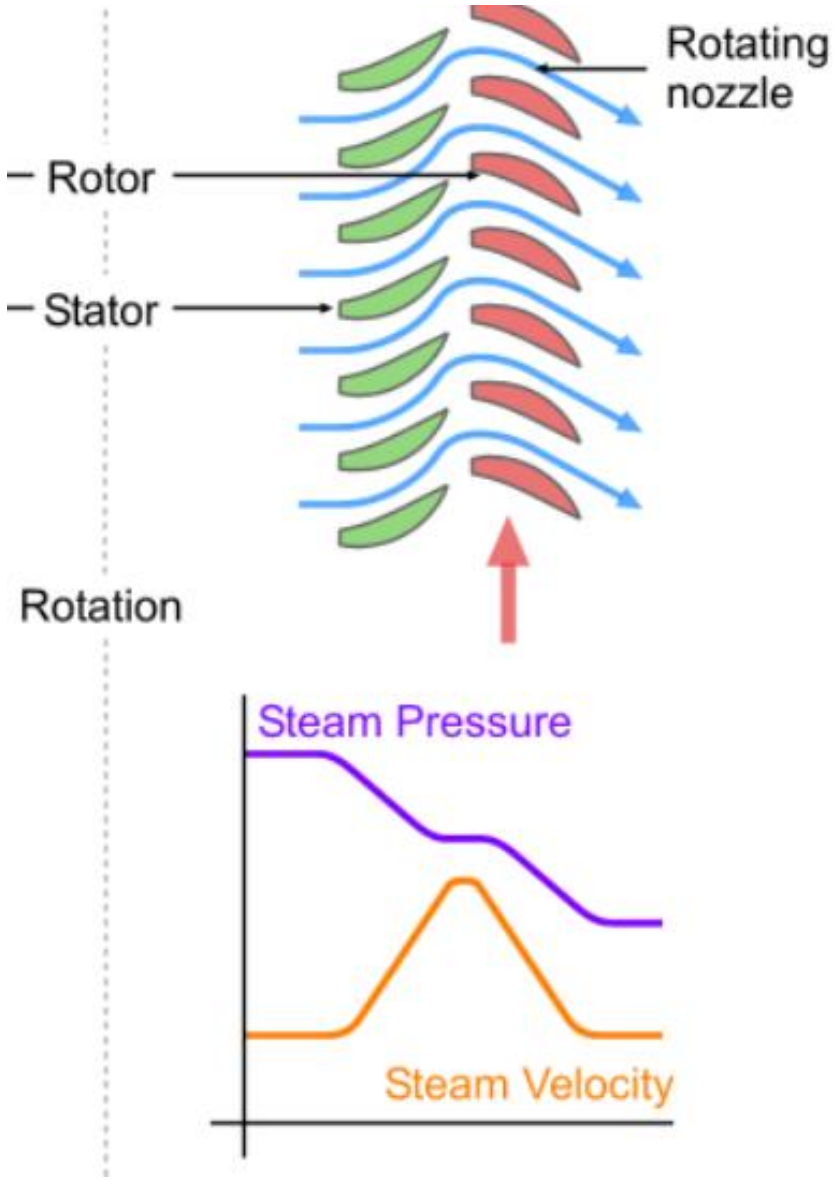

What is the difference between the steam turbine and gas turbine?

In term of	steam turbine	gas turbine
Working Fluid	high pressure steam	air or some other gas
Work Output	delivers torque only.	Deliver either torque or thrust.
The Space Required	More, requires boilers and heat exchangers, which should be connected externally. executing one step of the Rankine cycle	Less, combined device of compressor, combustion chamber, and turbine executing a cyclic operation executes the whole Brayton cycle.
The Efficiency	Lower, lower operating temperatures. steam turbines ~550 0C	Higher, higher operating temperatures. Gas turbines ~1500 0C

The combined cycle

- The combined cycle of greatest interest is the gas-turbine (Brayton) cycle topping a steam turbine (Rankine) cycle, which has a higher thermal efficiency than either of the cycles executed individually.
- The use of higher temperatures in gas turbines is made possible by developments in cooling the turbine blades and coating the blades with high-temperature-resistant materials such as ceramics.
- In this cycle, energy is recovered from the exhaust gases by transferring it to the steam in a heat exchanger that serves as the boiler. In general, more than one gas turbine is needed to supply sufficient heat to the steam.

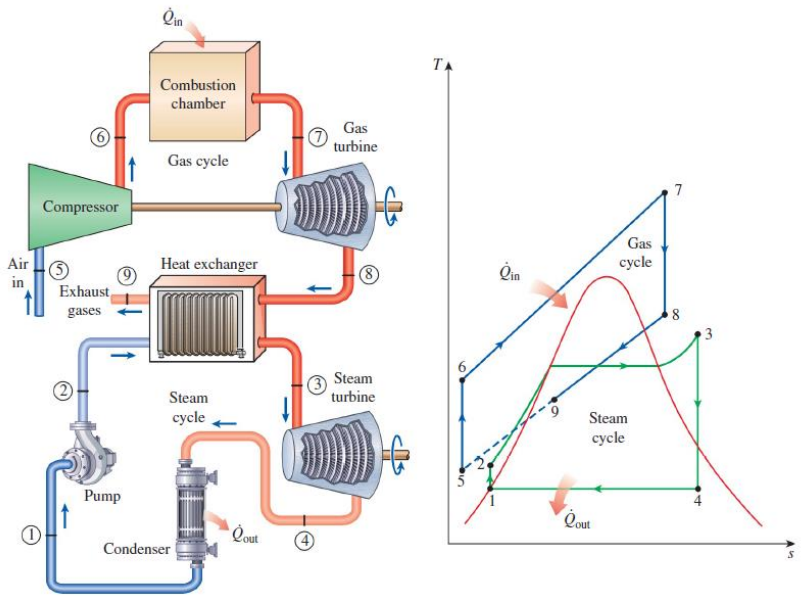

Define the combustion and what is the oxygen's role in combustion?

- Combustion is a chemical reaction during which a fuel is **oxidized**, and a large quantity of energy is release.
- The **oxidizer** most often used in combustion processes is air, for obvious reasons—it is free and readily available.
- We should also mention that bringing a fuel into intimate contact with oxygen is not sufficient to start a combustion process.
- The fuel must be brought above its ignition temperature to start the combustion.

What is fuel?

- Any material that can be burned to release thermal energy is called a **fuel**.
- Most familiar fuels consist primarily of hydrogen and carbon. They are called hydrocarbon fuels and are denoted by the general formula CnHm.
- Hydrocarbon fuels exist in all phases, some examples being coal, gasoline, and natural gas.

Differentiate between dry and atmospheric air?

- Air in the atmosphere normally contains some water vapor (or moisture) and is referred to as **atmospheric air**.
- By contrast, air that contains no water vapor is called **dry air**.
- It is often convenient to treat air as a mixture of water vapor and dry air since the composition of dry air remains relatively constant, but the amount of water vapor changes as a result of condensation and evaporation from oceans, lakes, rivers, showers, and even the human body.
- Although the amount of water vapor in the air is small, it plays a major role in human comfort.

Air = Water vapor + Dry Air

(changing due to condensation & evaporation) (Relatively constant)

CS Scanned with CamScanner

Important Parameters

- **Absolute or Specific humidity** specify directly the mass of water vapor present in a unit mass of **dry air.**
- Consider 1 kg of dry air. By definition, dry air contains no water vapor, and thus its specific humidity is zero. let us add some water vapor to this dry air. The specific humidity will increase. As more vapor or moisture is added, the specific humidity will keep increasing until the air can hold no more moisture. At this point, the air is said to be saturated with moisture, and it is called **saturated air.** Any moisture introduced into saturated air will condense.

$$\omega = \frac{m_v}{m_a}$$

Important Parameters

- The comfort level depends more on the amount of moisture the air holds (mv) relative to the maximum amount of moisture the air can hold at the same temperature (mg). The ratio of these two quantities is called the **relative humidity**

$$\phi = \frac{m_v}{m_g}$$

Dew-point Temperature

- If you live in a humid area, you are probably used to waking up most **summer mornings** and finding the grass wet. You know it did not rain the night before. So what happened? Well, the excess moisture in the air simply condensed on the **cool surfaces**, forming what we call **dew**. In summer, a considerable amount of water vaporizes during the day. As the temperature falls during the night, so does the "moisture capacity" of air, which is the maximum amount of moisture air can hold. (What happens to the relative humidity during this process?) After a while, the moisture capacity of air equals its moisture content. At this point, air is saturated, and its relative humidity is 100 percent. Any further drop in temperature results in the condensation of some of the moisture, and this is the beginning of dew formation.
- The **dew-point temperature Tdp** is defined as the temperature at which condensation begins when the air is cooled at constant pressure.

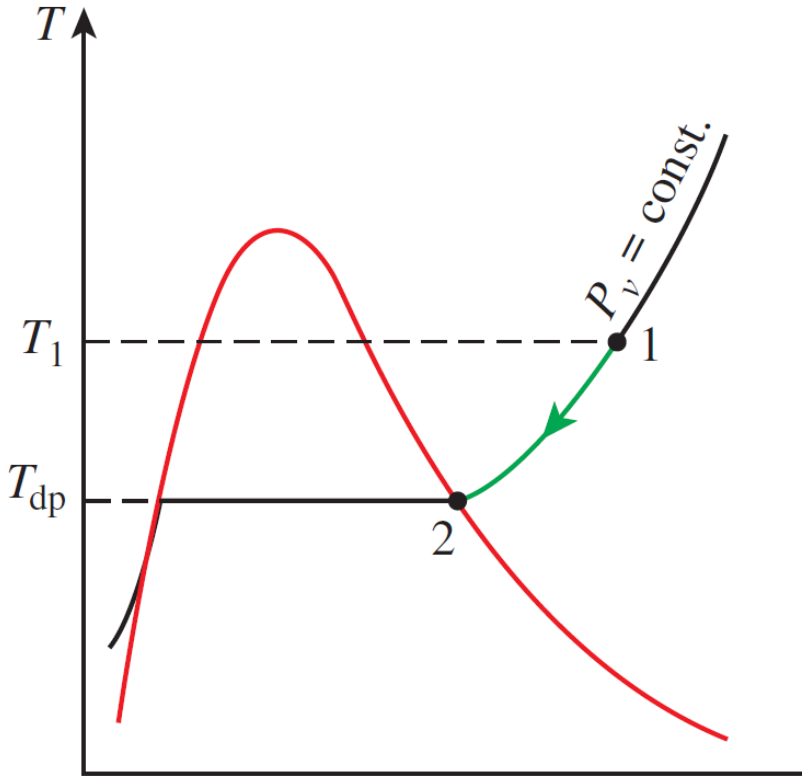

Air Conditioning Processes

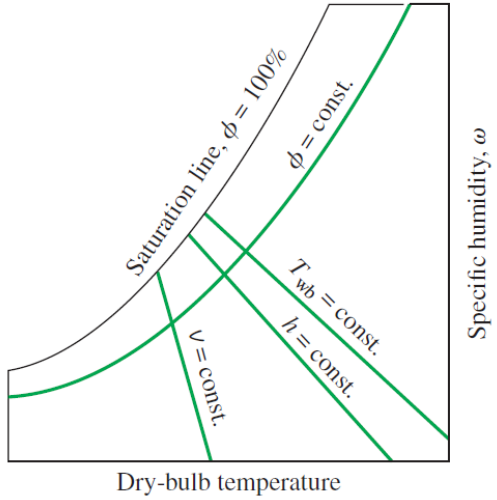

- Notice that simple heating and cooling processes appear as horizontal lines on this chart since the moisture content of the air remains constant (w constant) during these processes.
- **Air is commonly heated and humidified in winter and cooled and dehumidified in summer.**

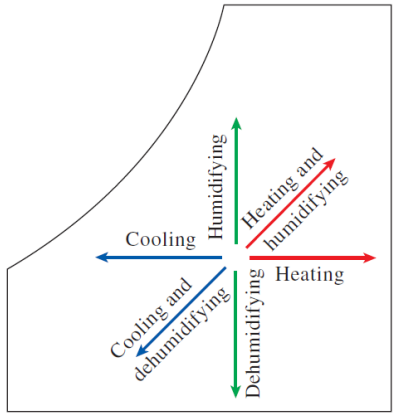

FIGURE 14–19
Various air-conditioning processes.

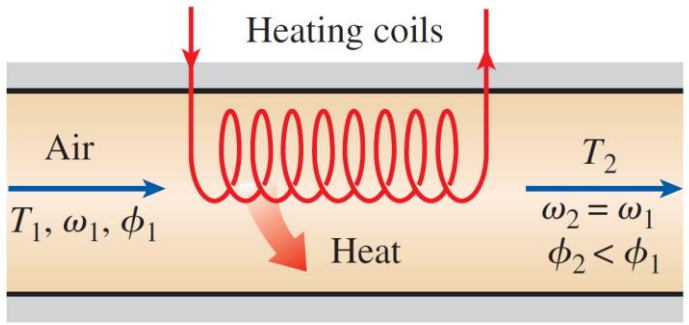

Simple Heating and Cooling (w constant)

- Notice that the relative humidity of air decreases during a heating process even if the specific humidity v remains constant. This is because the relative humidity is the ratio of the moisture content to the moisture capacity of air at the same temperature, and moisture capacity increases with temperature.
- A cooling process at constant specific humidity is similar to the heating process discussed above, except the dry-bulb temperature decreases and the relative humidity increases during such a process

Identify the bubble point

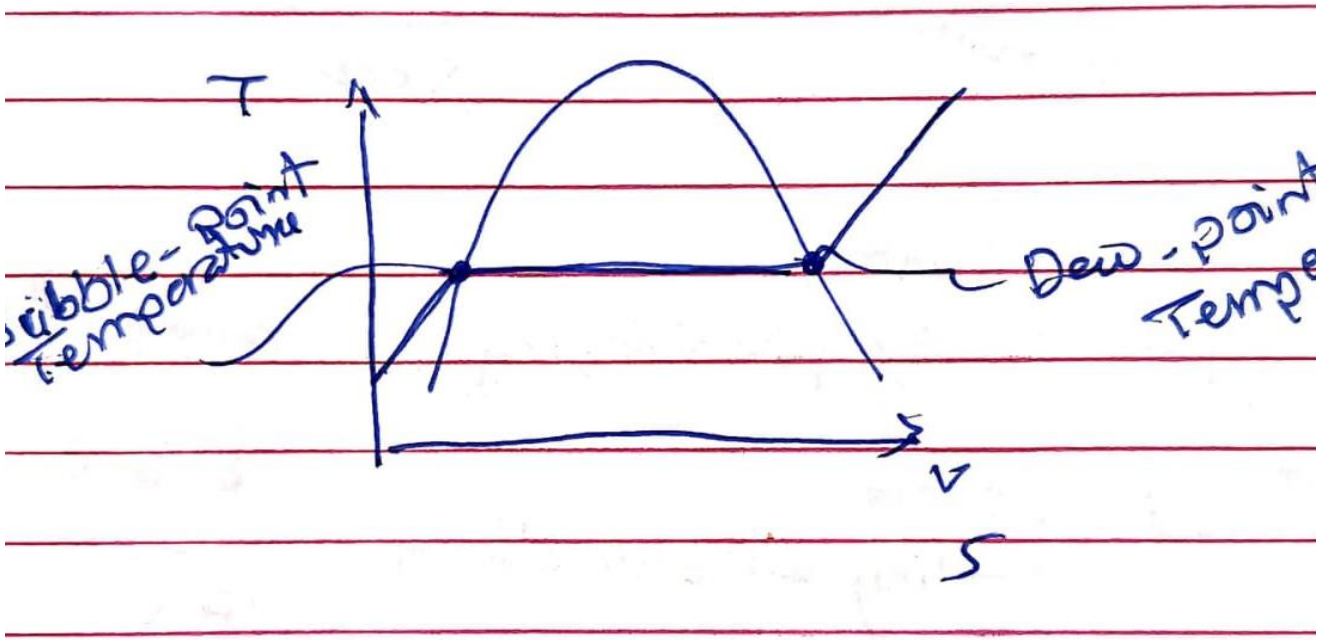

Scanned with CamScanner

- In thermodynamics, the bubble point is the temperature (at a given pressure) where the first bubble of vapor is formed when heating a liquid.

Venturi Effect

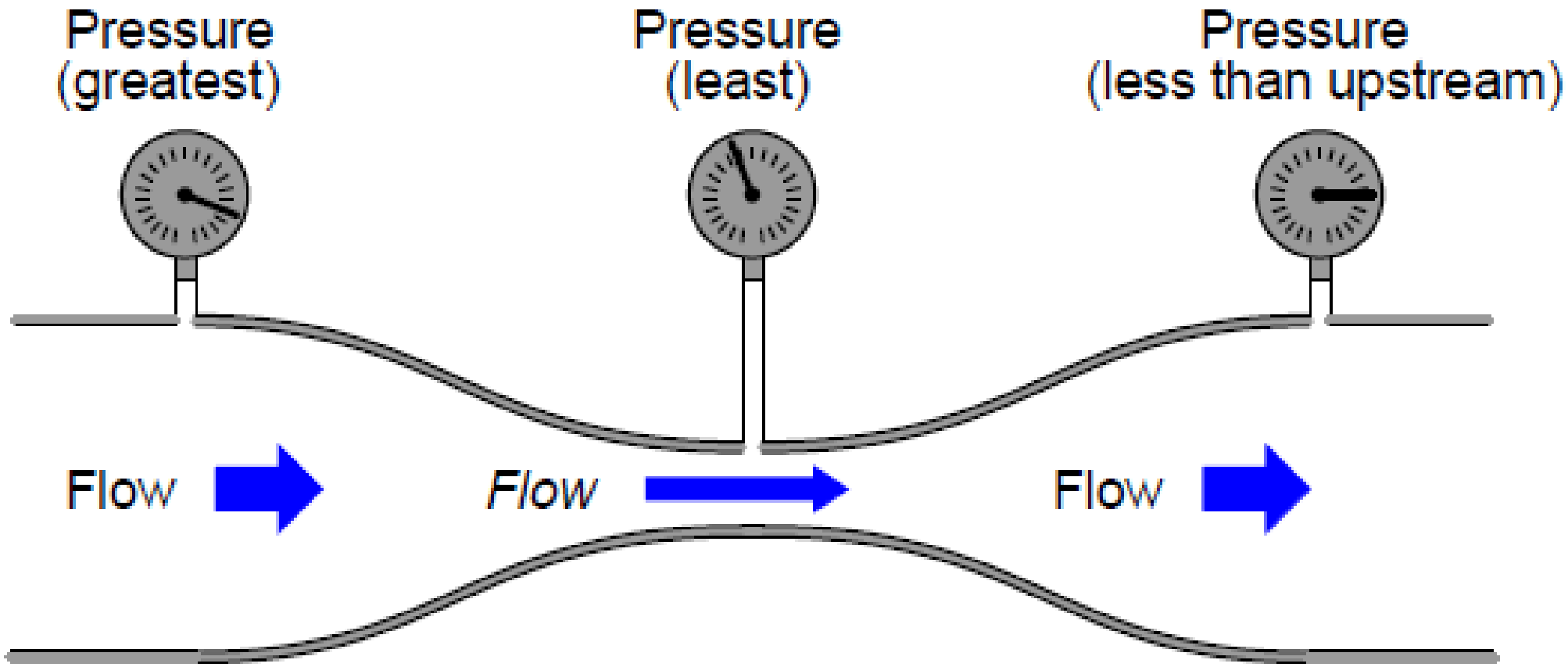

Fluid Mechanics

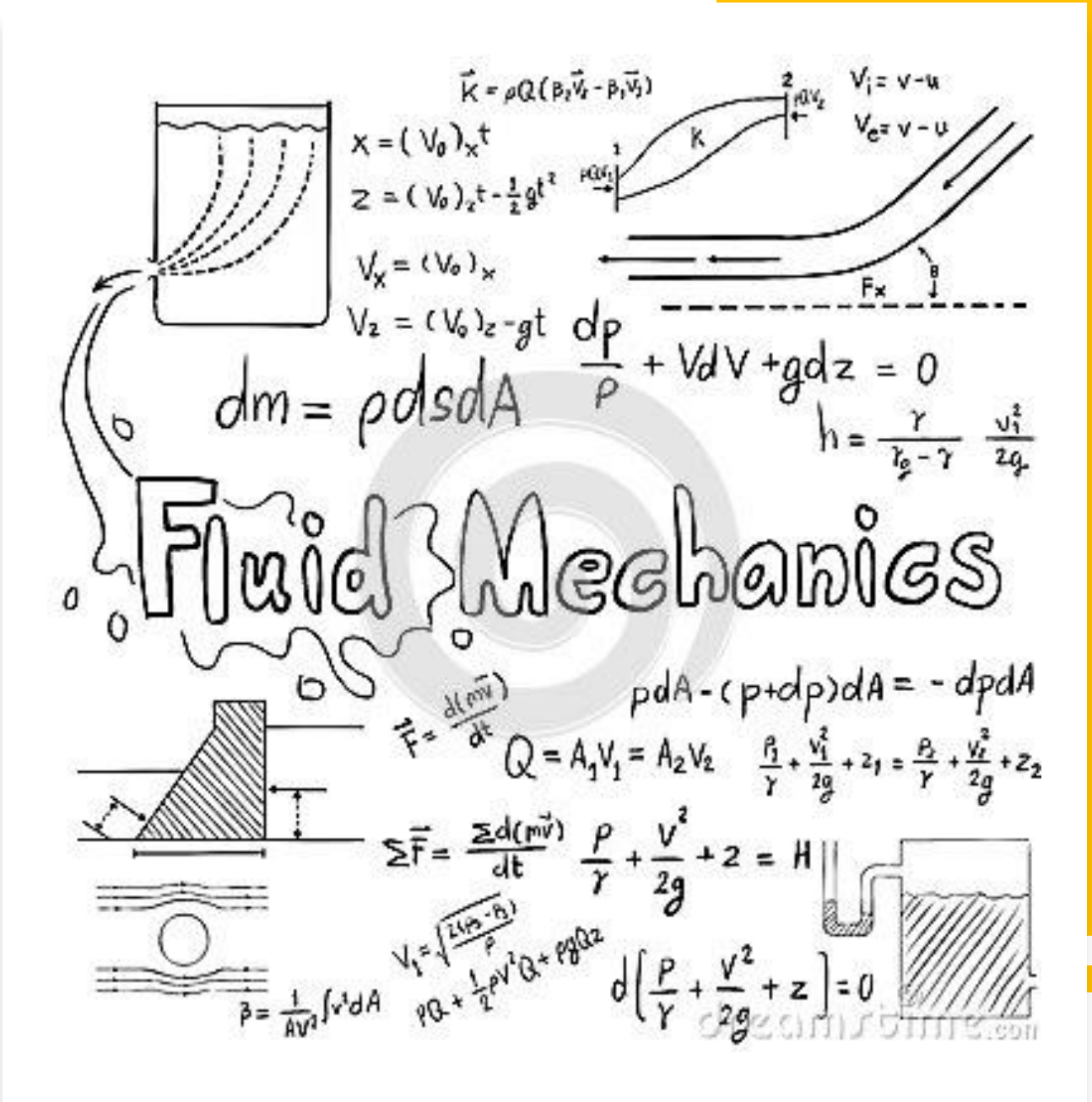

specific gravity

$$SG = \frac{\rho}{\rho_{H_2O}}$$

- Sometimes the density of a substance is given relative to the density of a well-known substance.

Specific gravities of some substances at 0°C

Substance	SG
Water	1.0
Blood	1.05
Seawater	1.025
Gasoline	0.7
Ethyl alcohol	0.79
Mercury	13.6
Wood	0.3–0.9
Gold	19.2
Bones	1.7–2.0
Ice	0.92
Air (at 1 atm)	0.0013

$$\gamma_s = \rho g$$

Specific Weight

The weight of a unit volume of a substance is called specific weight and is expressed as

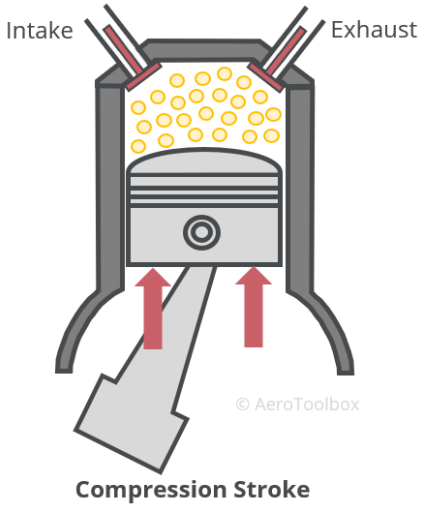

Pressure Units

- 1 Bar = 100 kPa = 14.5 psi
- The recommended pressure for air in tires ranges between **30 and 35 psi.**
- In car engine, peak cylinder pressures near TDC (where spark occurs) will be in the range of **300 psi** for engine's at light loads

What is Hydrostatic pressure?

- The pressure that is generated by the **weight of liquid** above a measurement point, when the liquid is at rest.

$$P_h = \rho g h$$

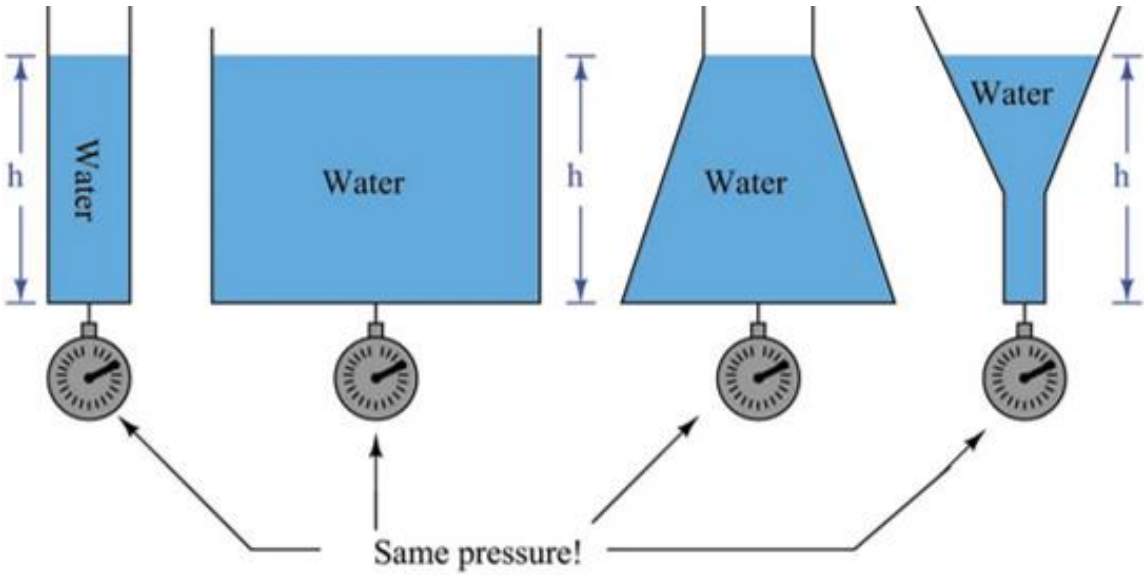

What is the Hydrostatic Equation?

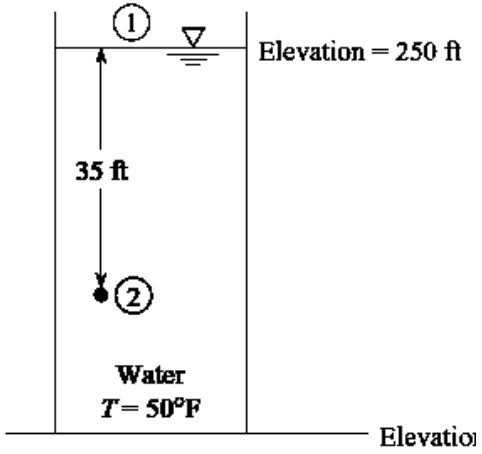

The piezometric head in a static fluid with uniform density is constant at every point.

$$\frac{p_1}{\gamma} + z_1 = \frac{p_2}{\gamma} + z_2$$

What is the Bernoulli equation?

- The assumptions to apply Bernoulli equation :
  - The flow is steady - the flow parameters does **not** change with time.
  - The flow is **not** compressible (constant density).
  - The flow is **not** viscous.

- The **total mechanical energy** of the fluid is conserved and constant.

- **Volute** in the casing of centrifugal pumps converts the velocity of fluid into pressure energy by increasing the area of flow.

$$\frac{P_2}{\rho g} + \frac{V_2^2}{2g} + z_2 = \frac{P_1}{\rho g} + \frac{V_1^2}{2g} + z_1$$

Pressure head + kinetic head + potential head = constant

What are the differences between Turbulent and laminar flow?

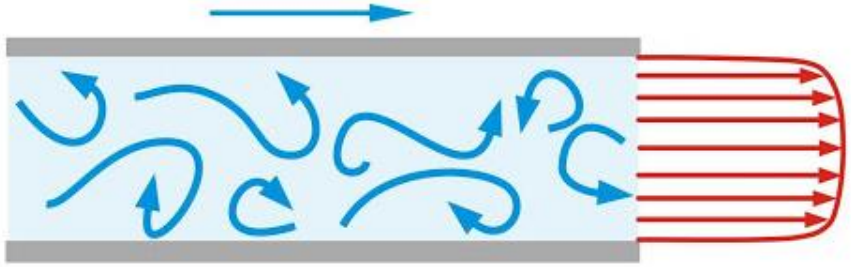

<u>Turbulent flow</u>

- is characterized by a **mixing action** throughout the flow field, and this mixing is caused by eddies of varying sizes within the flow.
- Full of **irregularities**, **eddies**, and **vortices** mixing flow.

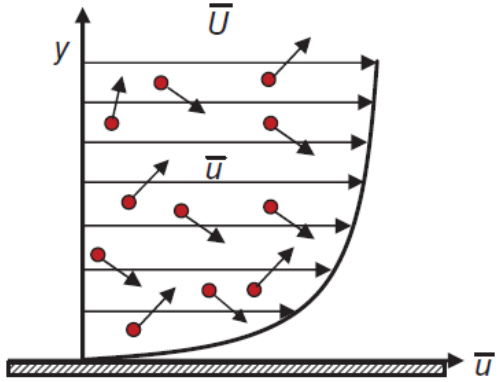

Turbulent flow near a solid boundary

What are the differences between Turbulent and laminar flow?

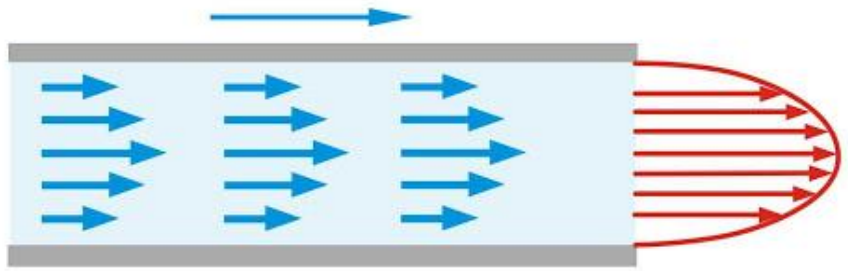

Laminar flow

- This flow has a very **smooth appearance**.
- No **mixing phenomena** and **eddies**.
- A typical example is the flow of honey.
- Velocity distribution is parabolic (less uniform)
- Velocity is constant with time at any given position (no fluctuation)

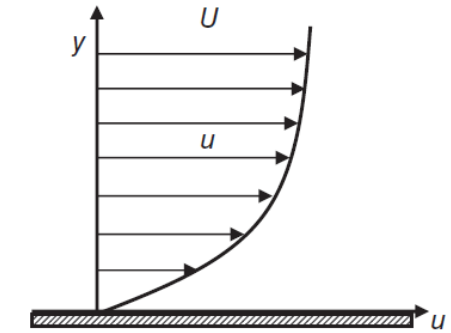

Laminar flow near a solid boundary

Figure 1.13 The velocity profiles

What is Reynold's number?

1. Laminar Flow $Re < 2000$
2. Unstable Flow $2000 < Re < 4000$
3. Turblent Flow $Re > 4000$

The Reynolds number (Re) is

- dimensionless quantity.
- used to **predict flow patterns** in different fluid flow situations.

$$Re = \frac{\rho V L}{\mu}$$

What are the Friction Losses in Piping System?

- Friction losses in piping systems are normally divided into two parts:
  - **The major losses** represent the friction losses in straight pipes.
  - **The minor losses** represent the losses in various types of pipe fittings including bends, valves, filters, and flowmeters. (K is a friction factor to be obtained experimentally for every pipe fitting)

$$(h_L)_{minor} = \sum K \frac{V^2}{2g}$$

$$h_L = \frac{fLV^2}{2gD}$$

How to calculate the flow rate and the mass flow rate?

Mass flow rate equation

$$\dot{m} = \rho A \overline{V} = \rho Q$$

$$Q = VA$$

$$\text{Flow Rate } (\text{m}^3/\text{s}) = \text{Velocity } (\text{m/s}) \times \text{Area } (\text{m}^2)$$

Can the fluid move inside a pipe from a low-pressure point to a high-pressure point?

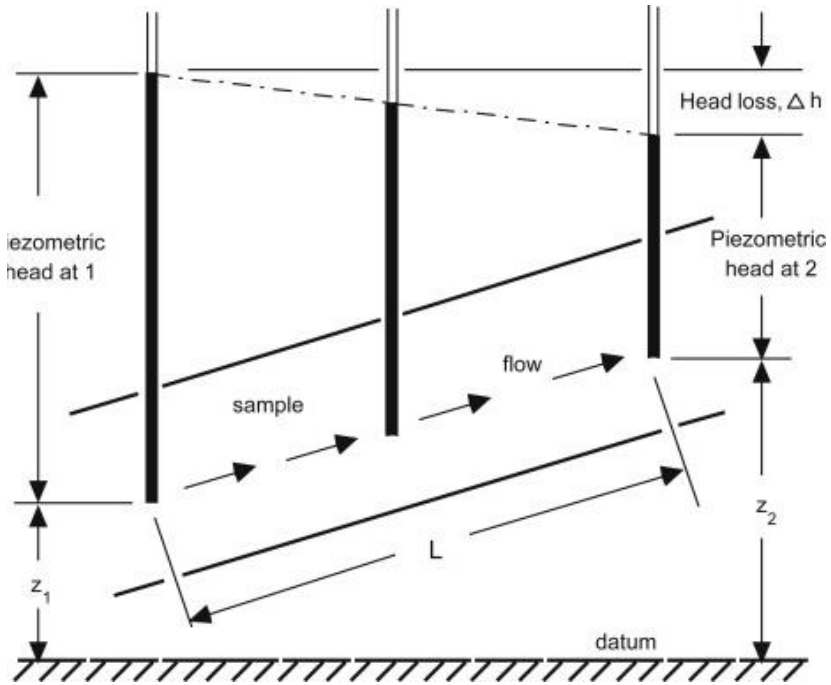

- Fluid basically flows from "higher energy level" to a "lower energy level". And yes, fluid can flow from low pressure point to high pressure point.
- **The direction in which the Total Head decreases is the direction of the flow.**

Mention 5 devices to measure temperature.

- **Thermocouple**
- **Thermistor**
- **Infrared Thermometers**
- Bi-metal thermometers
- Gas-actuated thermometer

What is Thermocouple?

- **Thermocouples** consist of two wire legs made from different metals. The wires legs are welded together at one end, creating a junction. This junction is where the temperature is measured.
- Let say one was made from copper, and the other one was made from iron.
- Then, the two metals will conduct heat differently, so the temperature gradient will be different that means the electron buildup will be different.
- And so we can connect a voltmeter to this and read a voltage difference.

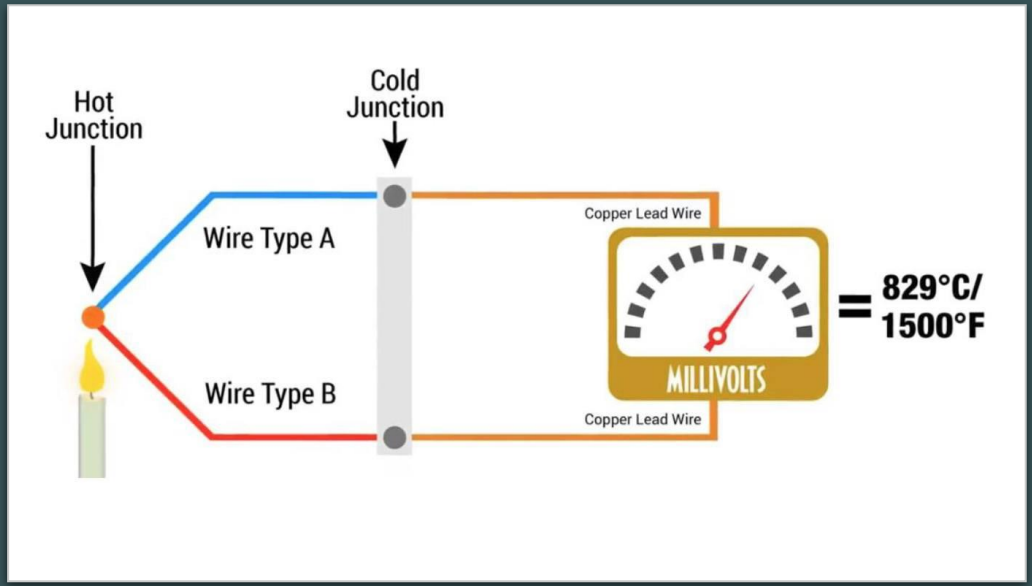

What is Thermistor?

- A **thermistor** is a type of resistor whose resistance is dependent on temperature
- Most conductors will increase in resistance the hotter they get. This occurs because, as the molecules become excited, they move around a lot, so it's harder for the free electrons to get through without a collision.
- So, using a formula known as Ohm's Law, voltage is equal to current multiplied by resistance. This means that as long as we keep the current the same, a change in resistance will cause a change in voltage, and as temperature changes the resistance of a material, we can measure the voltage to tell the temperature.

What is Infrared Thermometer?

- Every object that is not in absolute zero temperature has atoms moving within it. These moving molecules emit energy in the form of **infrared radiation**.
- Infrared thermometers employ a lens to focus the infrared light emitting from the object onto a detector known as a **thermopile**.
- The **thermopile** is thermocouples connected in series or parallel. Then we can measure the voltage to measure the temperature.

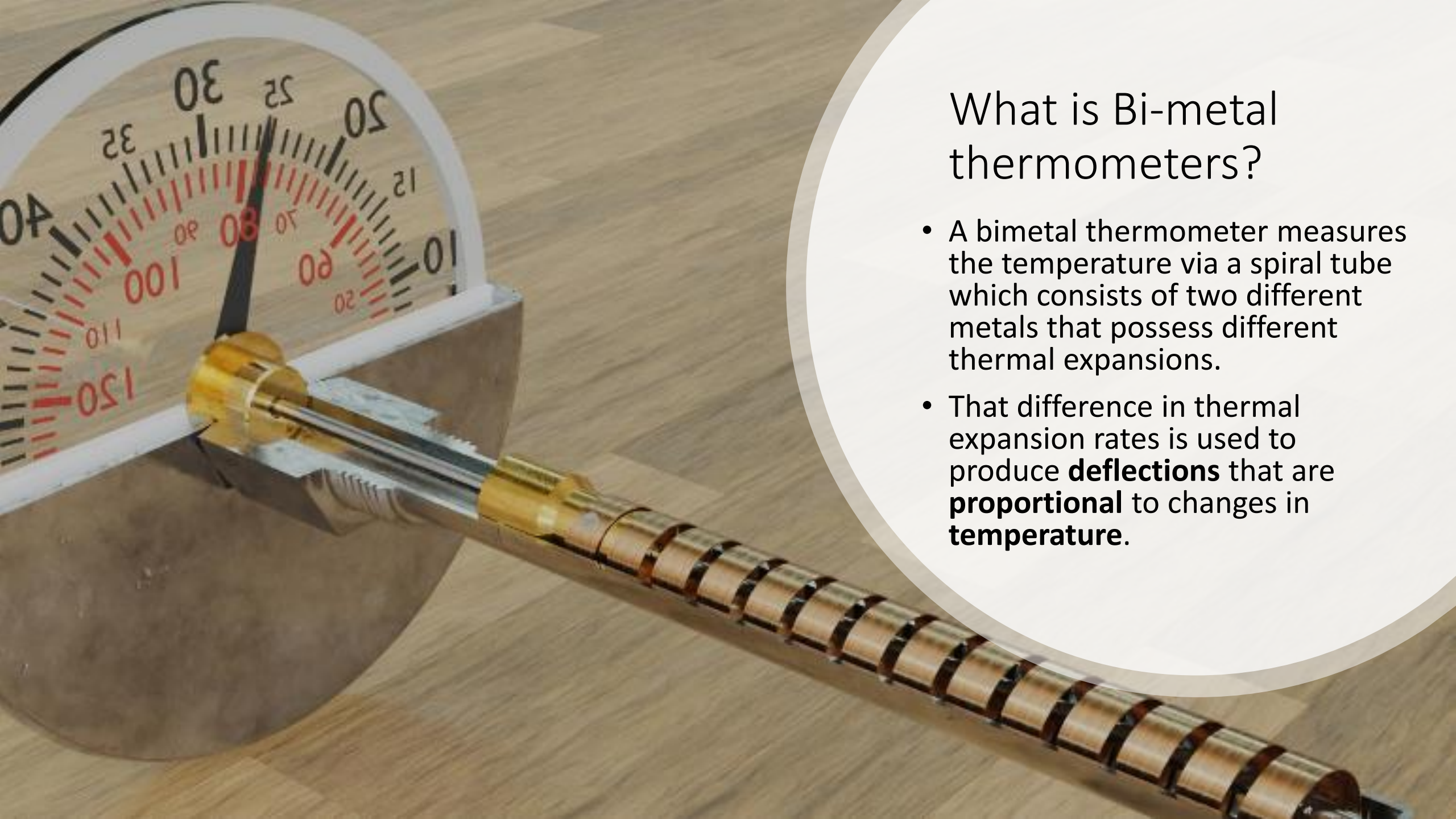

What is Bi-metal thermometers?

- A bimetal thermometer measures the temperature via a spiral tube which consists of two different metals that possess different thermal expansions.
- That difference in thermal expansion rates is used to produce **deflections** that are **proportional** to changes in **temperature**.

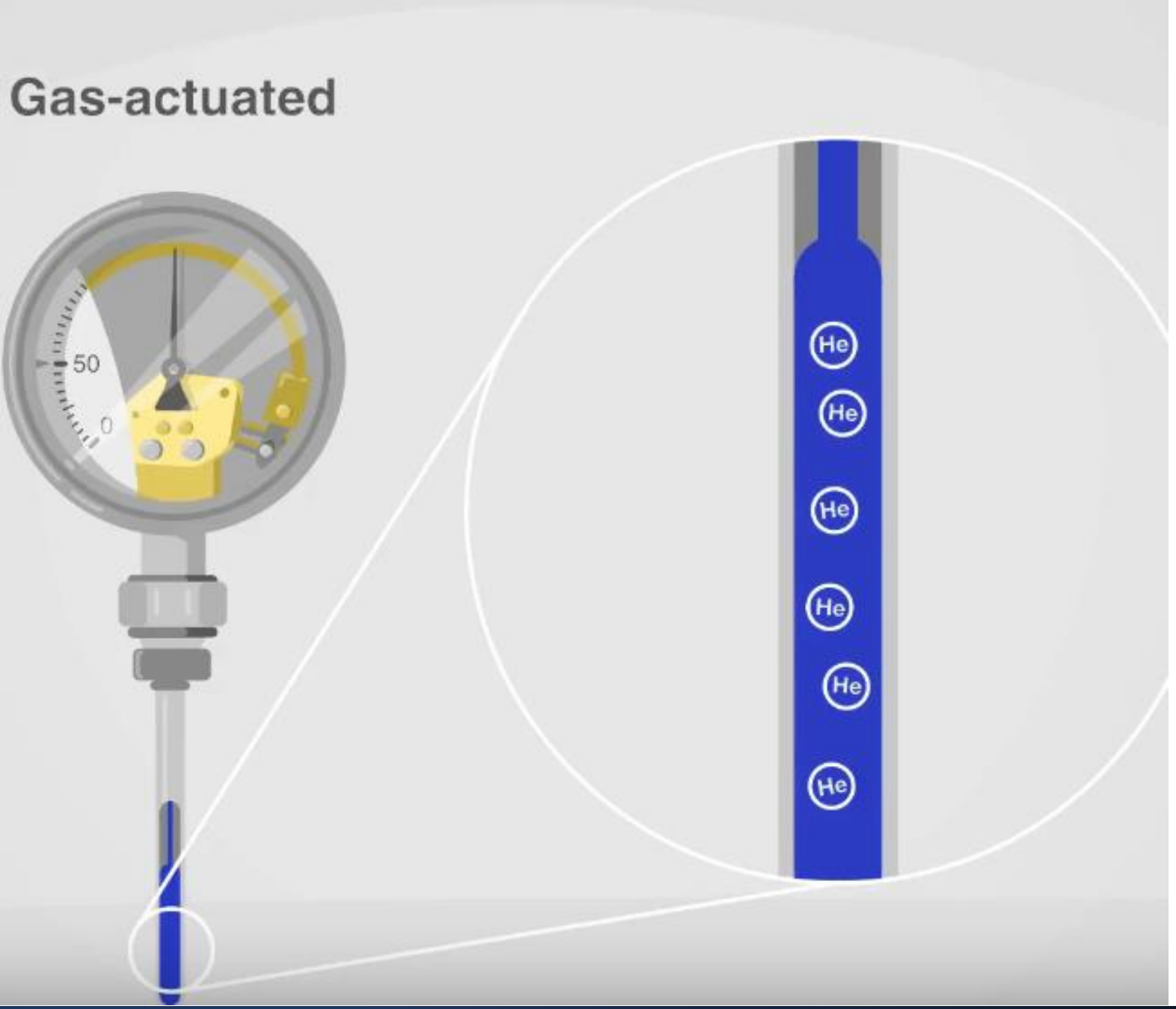

What is gas-actuated thermometer?

- The gas (preferably helium) expands at elevated temperatures and **deforms** the measuring tube.

Mention 3 devices to measure Pressure

- Bourdon tube pressure gauge
- Manometer
- Barometer

What is Bourdon tube pressure gauge?

- A Bourdon-tube gage measures pressure by sensing the deflection of a coiled tube.
- The tube has an elliptical cross section and is bent into a circular arc.
- When atmospheric pressure (zero gage pressure) prevails, the tube is undeflected, and for this condition the gage pointer is calibrated to read zero pressure.
- When pressure is applied to the gage, the curved tube tends to straighten, thereby actuating the pointer to read a positive gage pressure.

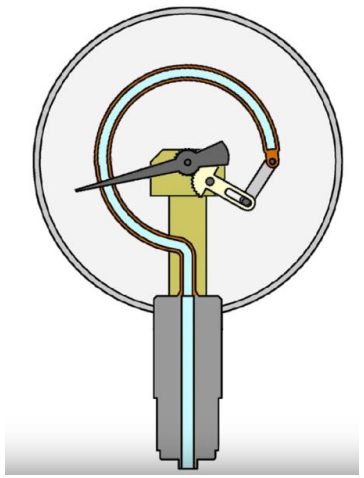

What is Manometer?

- A manometer, often shaped like the letter "U," is a device for measuring pressure by raising or lowering a column of liquid
- Positive gage pressure in the pipe pushes the manometer liquid up a height h.

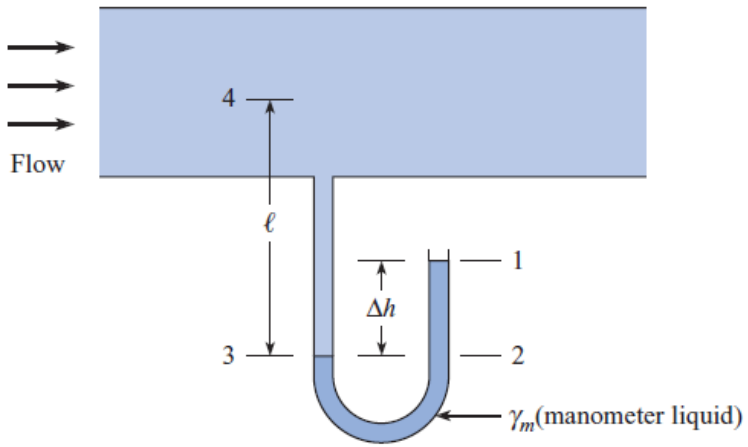

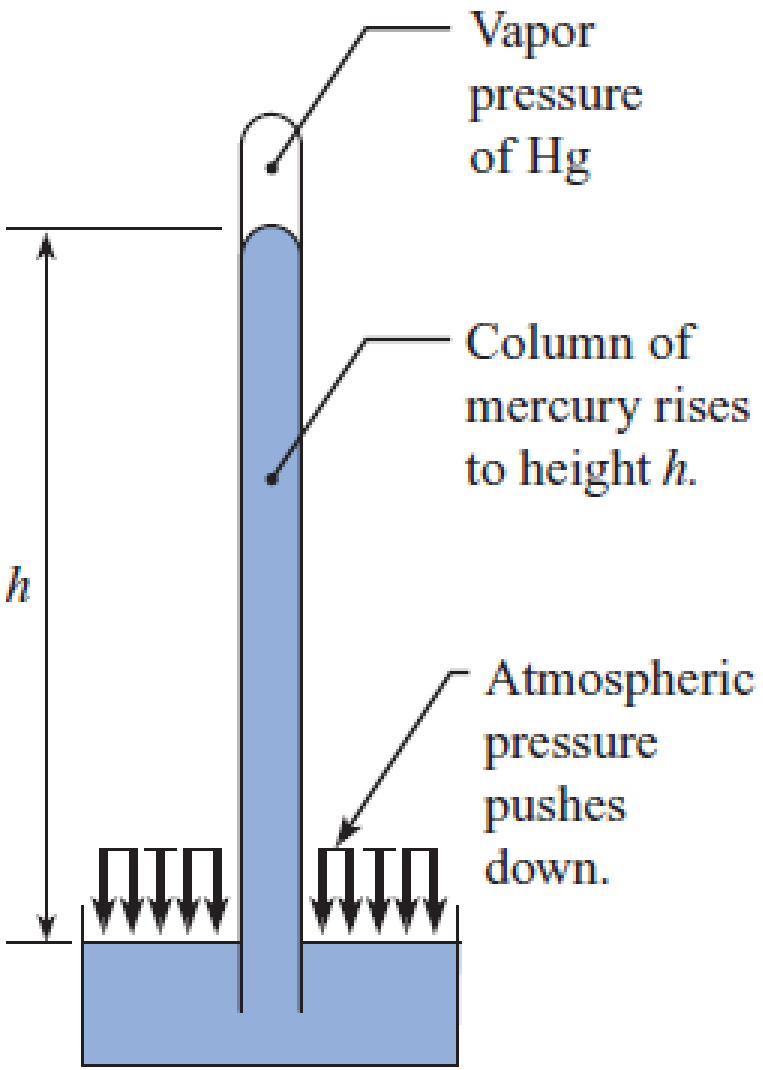

What is Barometer?

- An instrument that is used to measure atmospheric pressure is called a barometer.
- A mercury barometer is made by inverting a mercury-filled tube in a container of mercury The pressure at the top of the mercury barometer will be the vapor pressure of mercury, which is very small. Thus, atmospheric pressure will push the mercury up the tube to a height h.

Mention 3 devices to measure flow rate.

1. Venturi meter
2. Rotameter
3. Orifice meter

What is Orifice plate?

- An orifice meter is an instrument for measuring flow rate by making a pressure drop in the fluid due to the sudden change in the cross-sectional area.
- Flow rate is found by measuring the pressure drop across the orifice and then using an equation to calculate the appropriate flow rate.

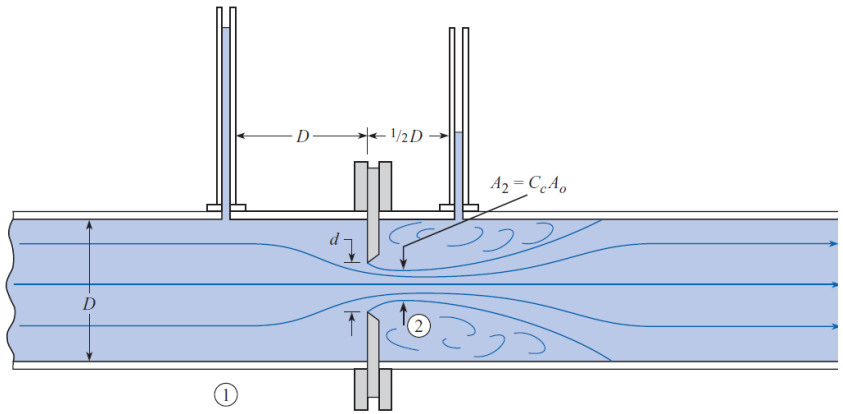

What is Venturi Meter?

- The venturi meter is an instrument for measuring flow rate by using measurements of pressure across a converging-diverging flow passage.
- The main advantage of the venturi meter as compared to the orifice meter is that the head loss for a venturi meter is much smaller.

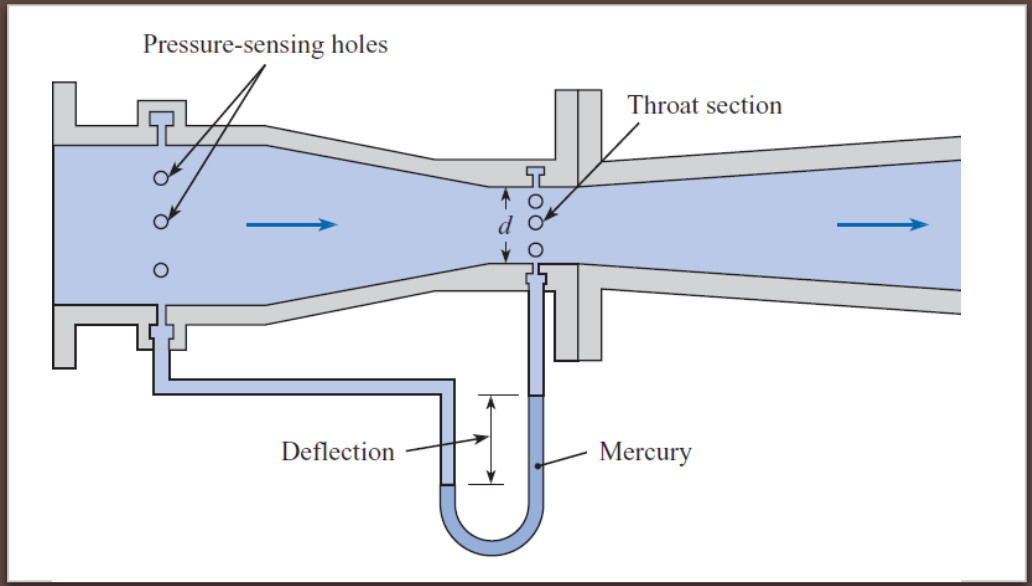

What is Rotameter?

- The rotameter is an instrument for measuring flow rate by sensing the position of an **element** that is situated in a **tapered** tube.
- The element moves up and down until it reaches the equilibrium position where both the weight and the drag forces are equal.
- The weight of the element is fixed, while the drag is changing depending on the flow rate and the cross-sectional area.
- Once the flow rate increases the element moves up, and at the same time the cross-sectional area is increasing which reduces the drag force until both forces become equal again.

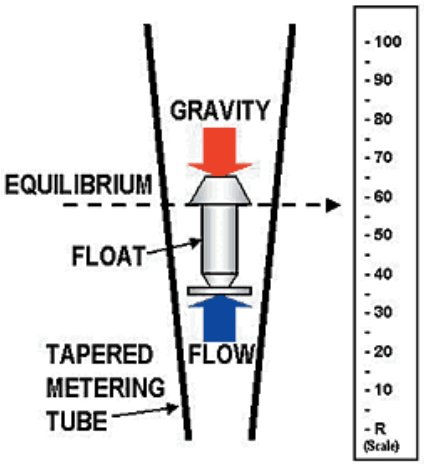

compressible flow

- An important parameter in the study of compressible flow is the **speed of sound** defined as the speed at which an infinitesimally small pressure wave travels through a medium.
- **Mach number** Ma is the ratio of the actual speed of the fluid to the speed of sound in the same fluid at the same state.
- The flow is called
  - Sonic when Ma = 1
  - Transonic when Ma =~ 1.
  - Subsonic when Ma<1
  - Supersonic when Ma > 1
  - Hypersonic when Ma >> 1

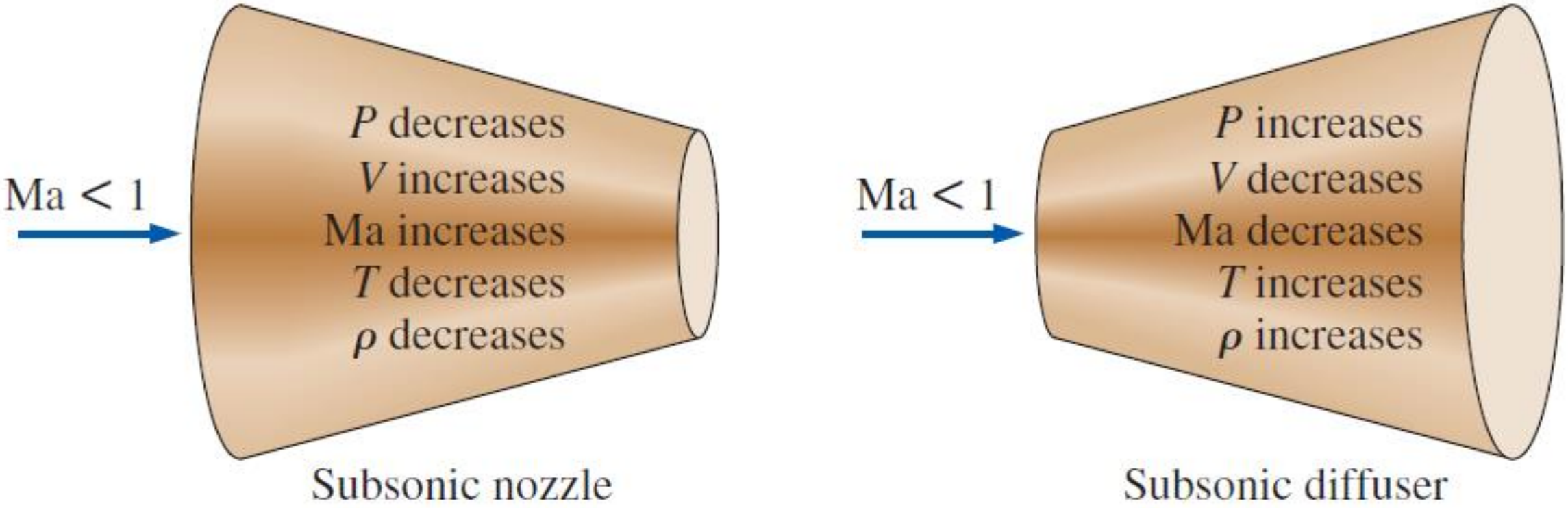

Subsonic flow

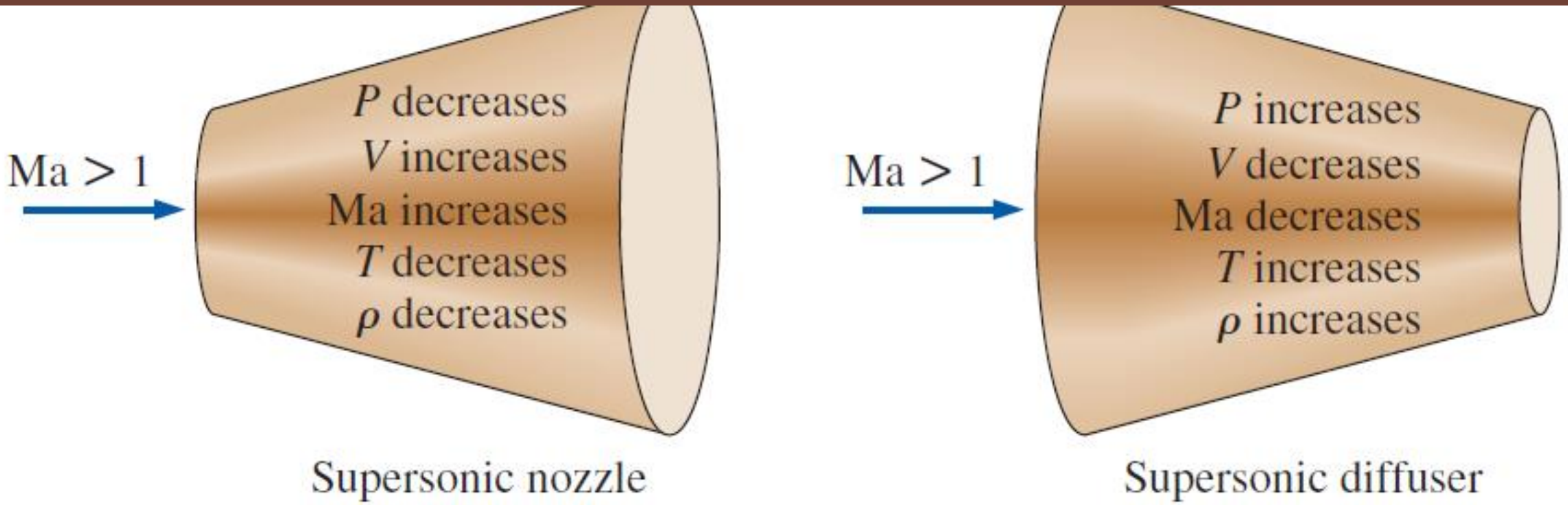

Supersonic flow

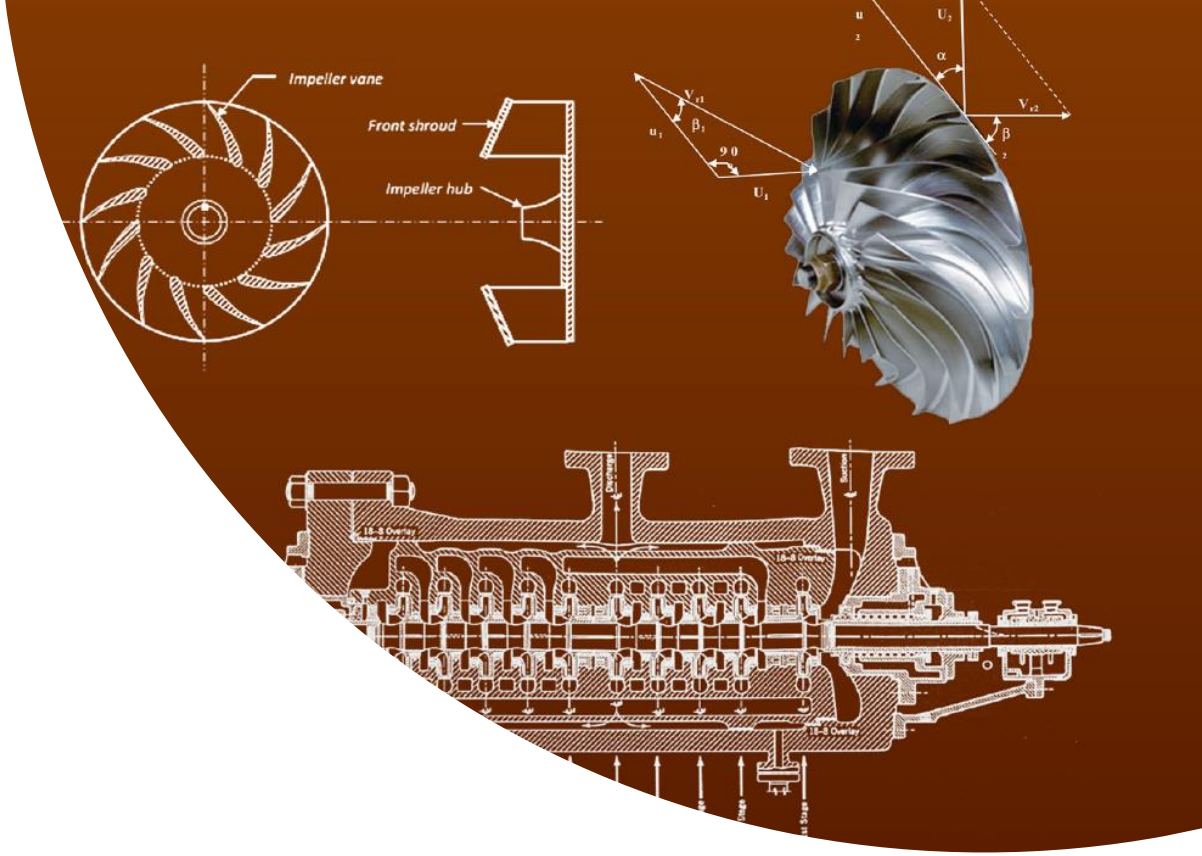

Pumping Machinery

Content

What are the Types of pumps?

Centrifugal pumps

- How do the centrifugal pumps work?
- Draw Pump Performance Characteristics
- The main components inside the pump
- What are the types of Losses on Pump?
- What is NPSH?
- What are the major pump problems? How to solve each one?
- How to control Flow Rate in Pumping Systems?

Displacement Pumps

How can you select a pump?

Compressors

- What is the difference between the pump & compressor?
- List the main components inside the compressor?
- What are the Types of Compressors?
- Compressor Performance Characteristics
- What are the major compressor problems? How to solve each one?

Types of pumps? And the differences between them

- **Dynamic pumps:** In these pumps, the fluid velocity is increased inside the pump to values higher than the discharge velocity. Velocity reductions within or after the pump create higher pressure.

- **Displacement pumps:** In these pumps, energy is added to the fluid by the direct application of a force that moves the fluid from the low-pressure side (suction) to the high-pressure side (delivery).

Types of pumps

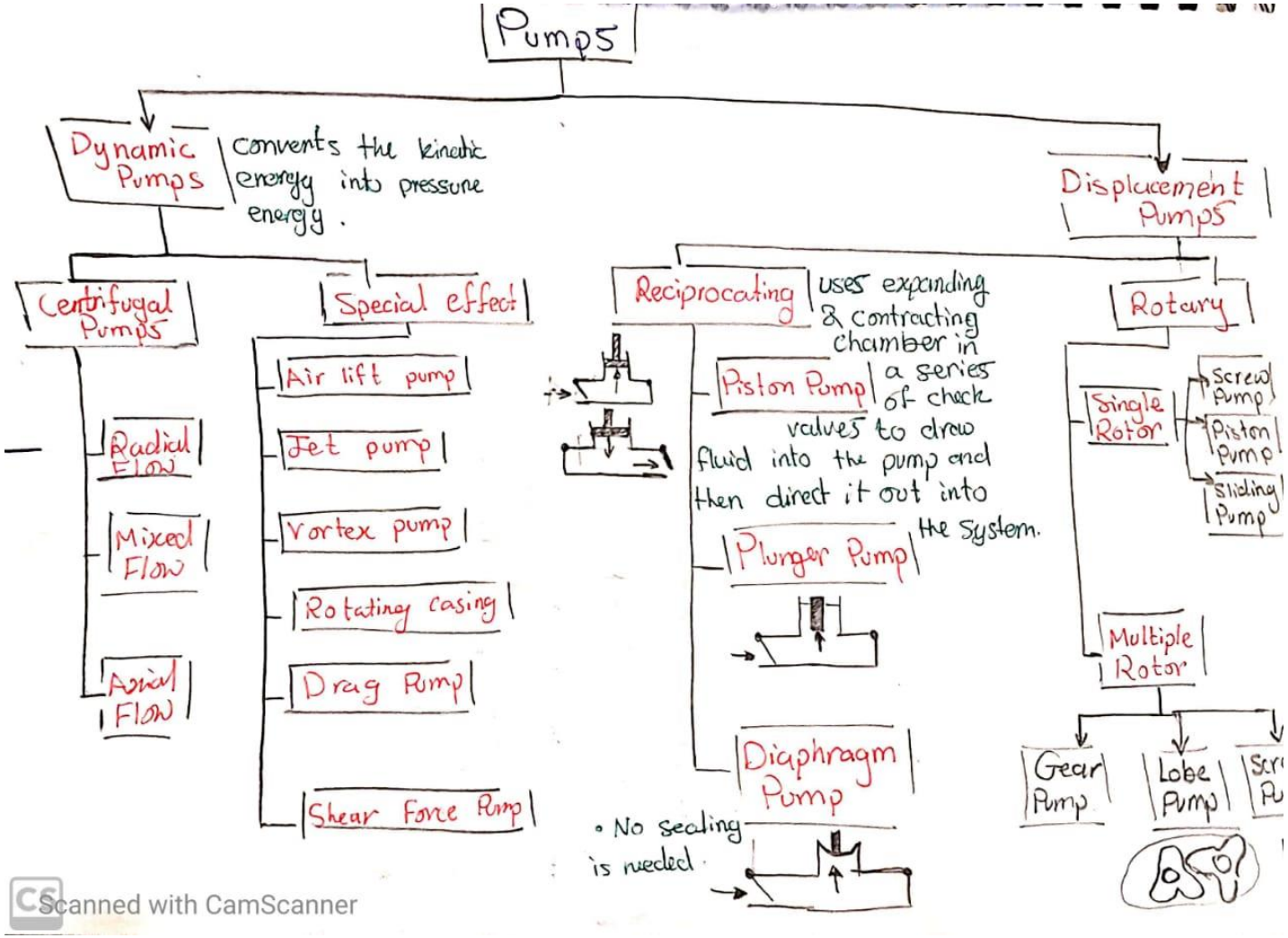

Scanned with CamScanner

Additional Classifications

- **Shape of casing** : volute shape, double volute, diffuser, annular, tubular, split casing, etc.
- **Inlet geometry**: single suction, double suction, axial inlet, side inlet, top inlet, etc.
- **Layout**: the pump shaft may be horizontal, vertical, or inclined.
- **Discharge pressure or the energy consumption**: pumps are sometimes classified as low pressure, high pressure, or high energy.
- **Number of stages**: in the cases of radial and mixed-flow centrifugal pumps, they may be classified as single-stage, double-stage, or multistage.
- **Liquid handled**: the type of pumped fluid may necessitate some special design considerations. For example, gasoline pumps require special sealing system to avoid leakage in order to reduce fire hazard, and similarly for handling toxic liquids.
- **Material of pump parts:** the material used for manufacturing the impeller and pump casing may differ based on the type of pumped fluid. Special materials or coatings are used when handling corrosive liquids (such as sulfuric acid). or liquids containing solid particles.
- **Type of prime mover**: in most cases, pumps are driven by electric motors, but in some cases, they can be driven by diesel engines or steam or gas turbines.
- **Operating condition**: such as submersible pump, wet motor pump, standby pump, and auxiliary pump.

What is the equation of a specific speed?

$$N_s = \frac{N\sqrt{Q}}{H^{3/4}}$$

- **The specific speed *Ns*** is a shape factor that helps the engineer to determine the type of pump to be used in a specific application.
- Example: What type of pump should be used to pump kerosene at a rate of 0.35 m3 /s under a head of 60 m assuming that N = 1450 rpm

Table 2.3 The specific speed range for different types of pumps

Type of pump	N_s range
Displacement pumps	<500
Radial-type centrifugal pumps	500–5000
Mixed-flow pumps	4000–10 000
Axial-flow pumps	9000–15 000

How do the centrifugal pumps work?

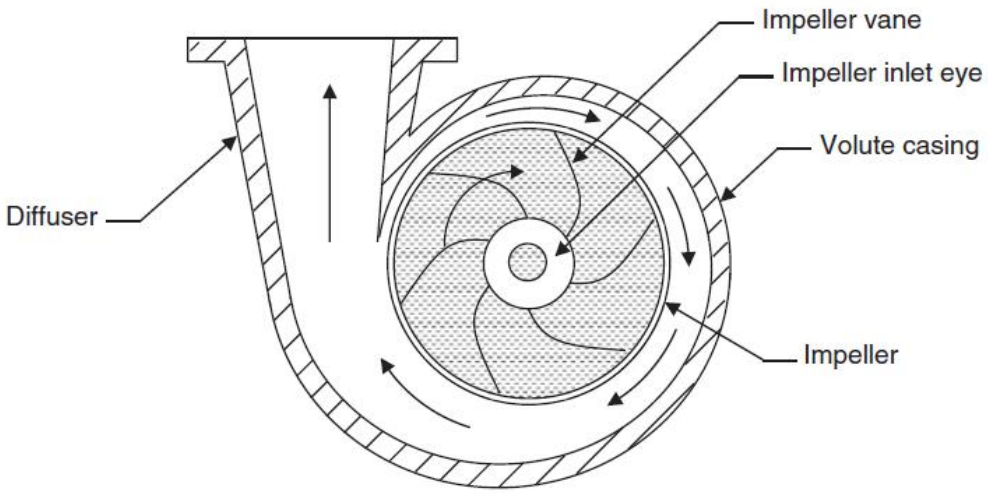

Figure 2.3 A sectional view of a radial-type centrifugal pump

- The fluid enters the impeller axially through the inlet eye in a direction perpendicular to the page and is then forced to rotate by the impeller vanes. While rotating inside the impeller the fluid moves outward, thus gaining increase in pressure with a parallel increase in kinetic energy. The high velocity at the impeller exit is transformed to a pressure increase through the volute casing and discharge nozzle which has a diffuser shape.

Pump Performance Characteristics

- The pump performance characteristics is a term used by engineers referring to the relationship between each of the total head developed by the pump (*H*), the pump power consumption (*BP*), the pump overall efficiency (η_o), and the pump flow rate (*Q*).
- These are usually presented graphically in terms of the three curves of *H*–*Q*, *P*–*Q*, and η_o–*Q* when the pump operates at a constant speed *N*, considering pure water as the pumped fluid.

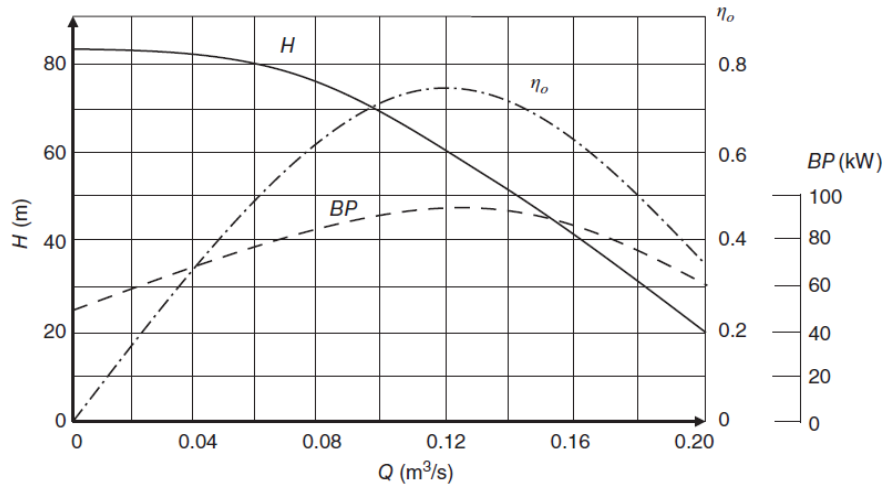

The main components inside the pump

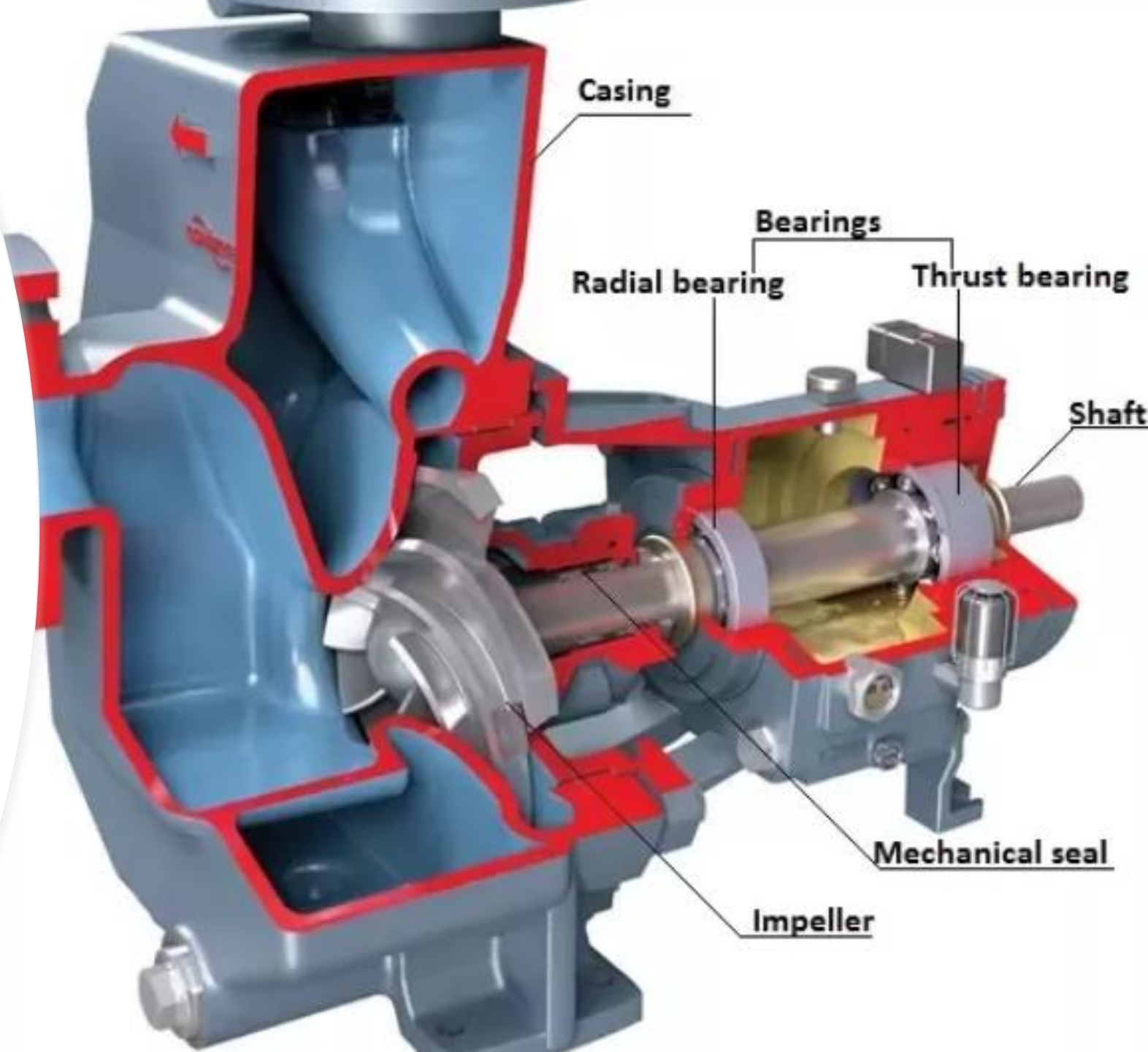

The main components inside the pump

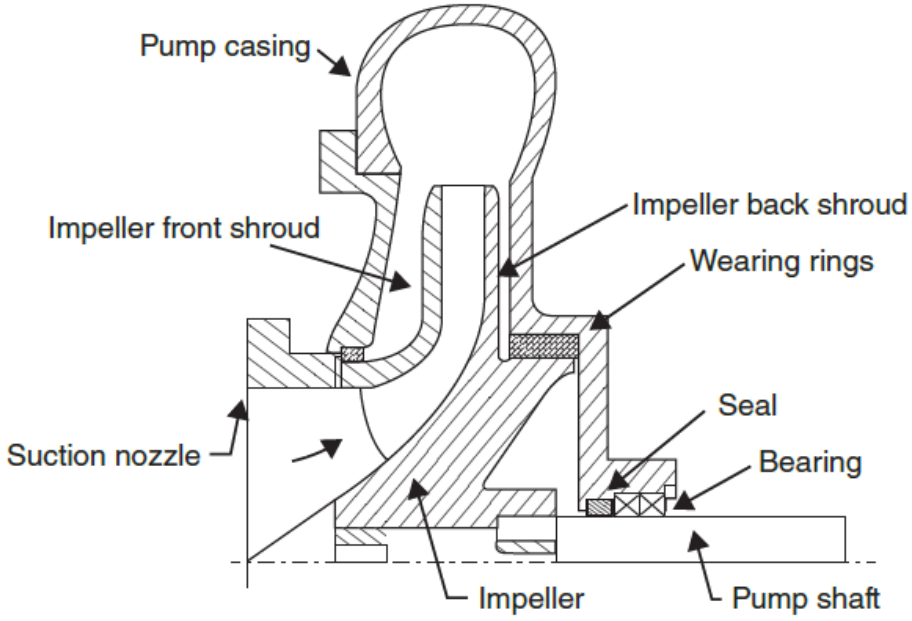

1. **The pump shaft** is an essential component and is used for transferring mechanical power from the prime mover to the pump.

The main components inside the pump

2. **The pump impeller** is the component that converts the input mechanical power to fluid power through the work done on the fluid. The fluid gains higher pressure and higher kinetic energy during its course of motion through the impeller.

What are the types of pump impeller?

- No-shrouds impellers cannot easily get clogged and accordingly are suitable for handling liquids with suspended materials/ solids.
- By contrast, the double-shrouded impellers provide maximum support to the vanes and are widely used for pumping liquids with less suspended solids.
- The pump impeller may be single suction (suction from one side) or double suction (suction from opposite sides).

Single-shrouded impeller

Double-shrouded impeller

Impeller with no shrouds

The main components inside the pump

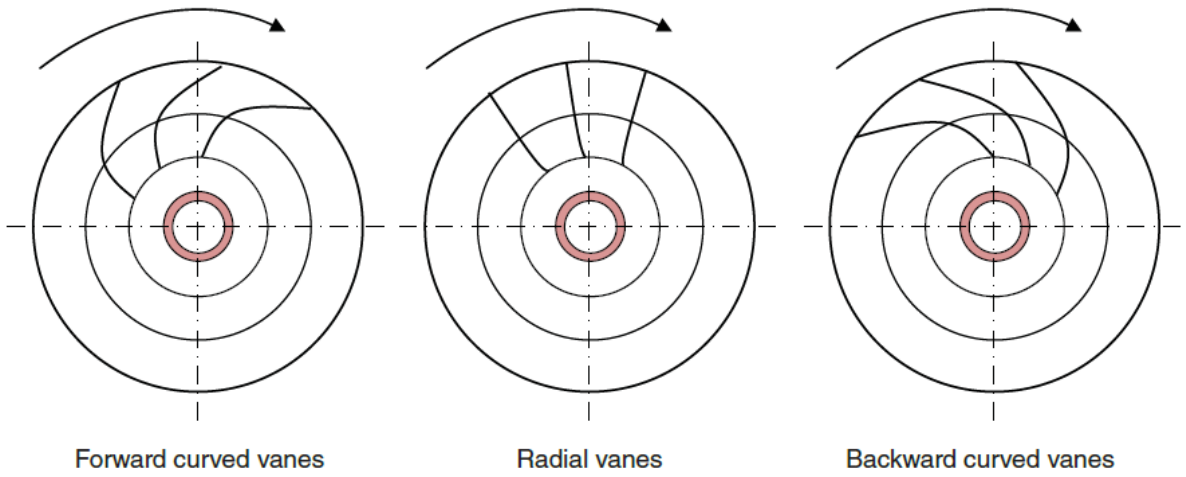

3. **The impeller vanes** are the most important elements in the pump. The work done on the fluid and the energy transfer from mechanical power to fluid power only occur because of the vanes.

- Also, the pump performance characteristics and the overall efficiency depend mainly on the vane shape and number of vanes.

The main components inside the pump

4. The **pump casing** is an essential part of the pump which is important not only for housing the impeller(s) and sealing the system, but also for supporting the suction and delivery nozzles.

- The shapes include concentric volute, semi-concentric volute, and spiral volute.
- The casing may have a single or double volute.
- The casing used for a multistage pump (barrel casing) has a special design to enable the pumped fluid to move from one stage to another with the minimum amount of loss while maintaining compact design.

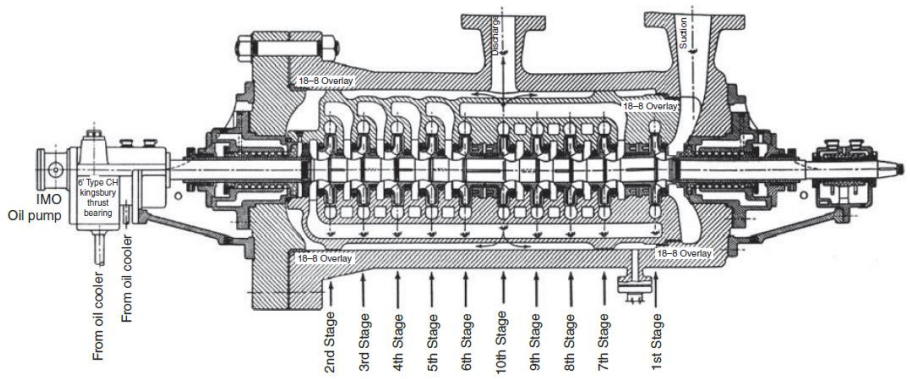

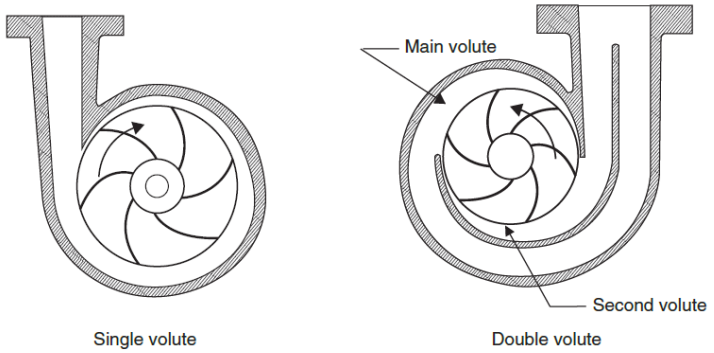

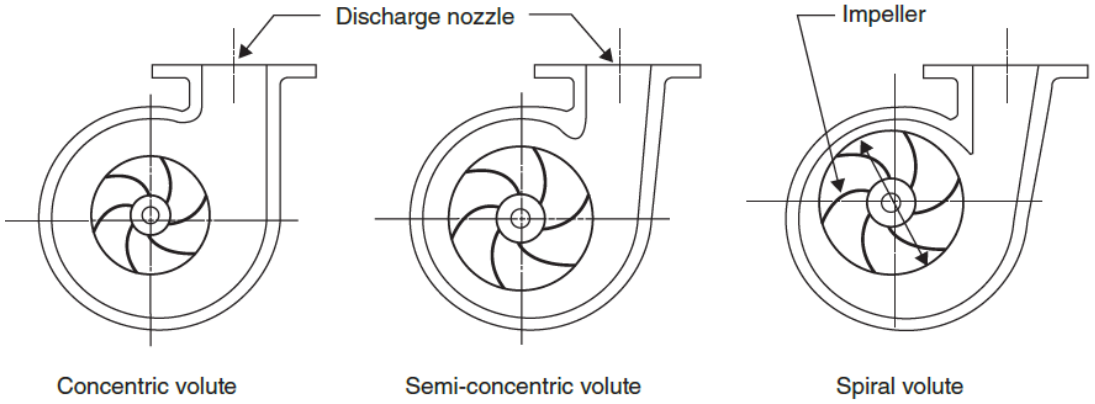

The main components inside the pump

5. **The pump suction nozzle** is used to direct the fluid from the suction pipe until it enters the impeller. These nozzles may have single entry or double entry and may have an axial inlet or a side inlet. The suction nozzle may also be equipped with inlet guide vanes that are used for flow rate control.
6. **The discharge nozzle** directs the fluid from the casing to the discharge pipe. It also acts as a diffuser that converts the fluid's high velocity into pressure.

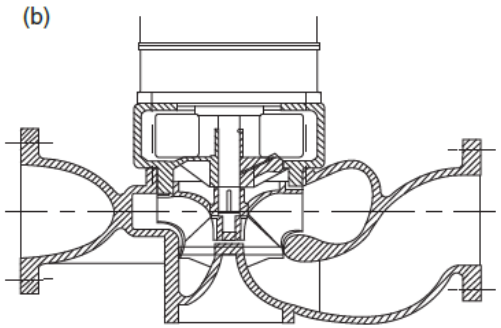

Side inlet suction nozzle

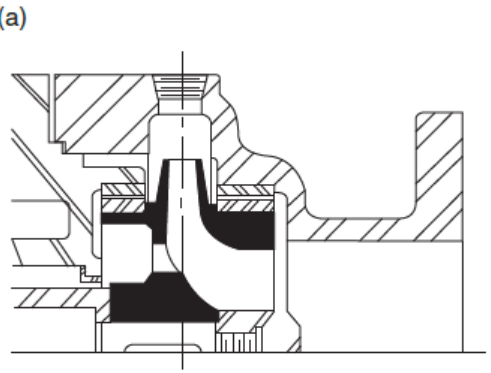

Axial inlet suction nozzle

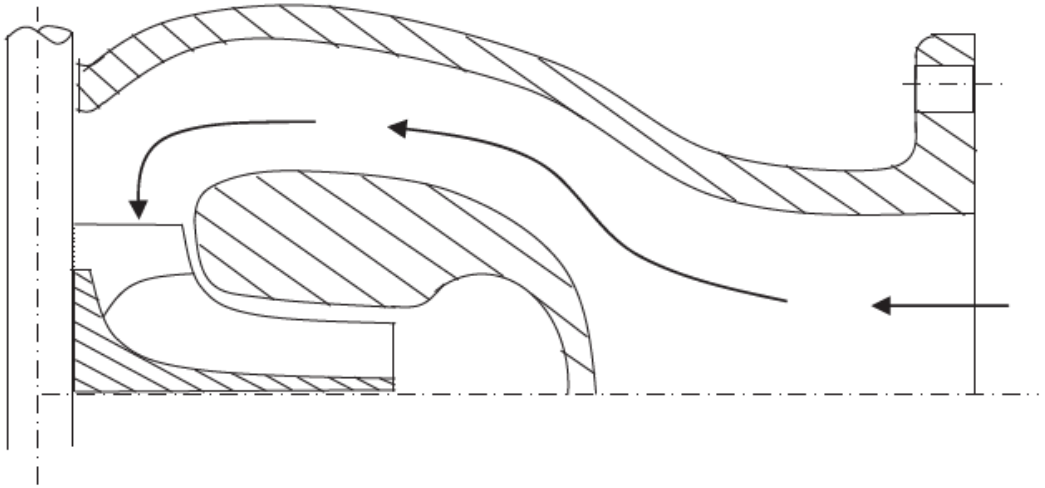

The main components inside the pump - **Bearings**

MOVER TYPE	COMMON BEARING TYPE USED
Centrifugal pumps	• Two angular contact ball bearing. • One cylindrical roller bearing.
Centrifugal compressors	Two radial (journal) bearings. One thrust bearing.

The main components inside the pump

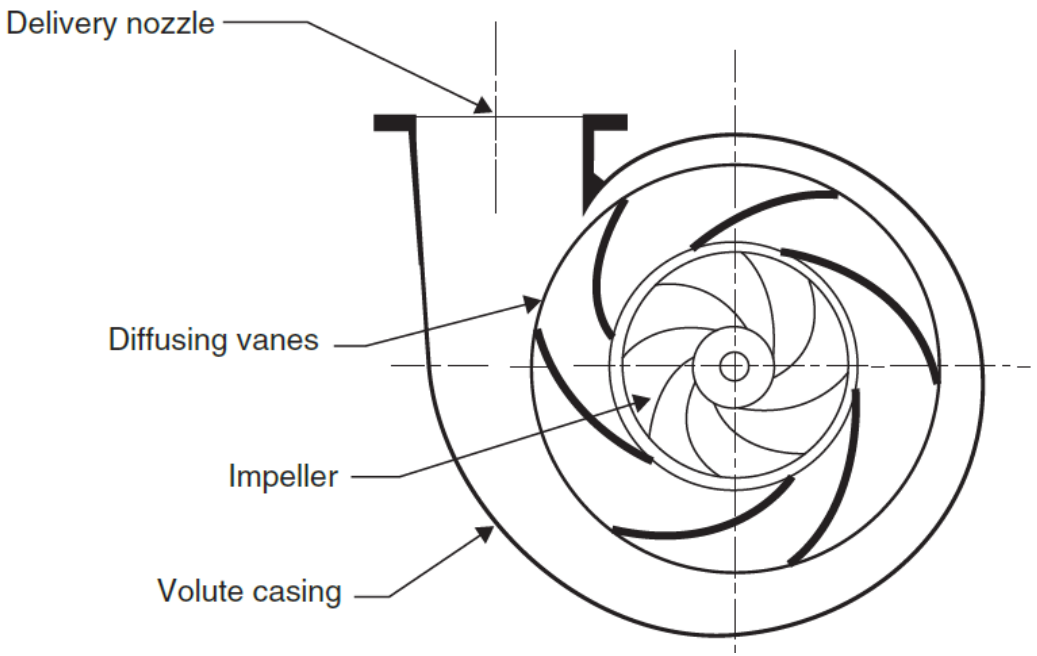

8. The main function of **diffusing vanes** is to streamline the flow at the impeller exit and convert the high velocity into pressure. This will lead to a reduction of friction losses in the volute casing.

The main components inside the pump

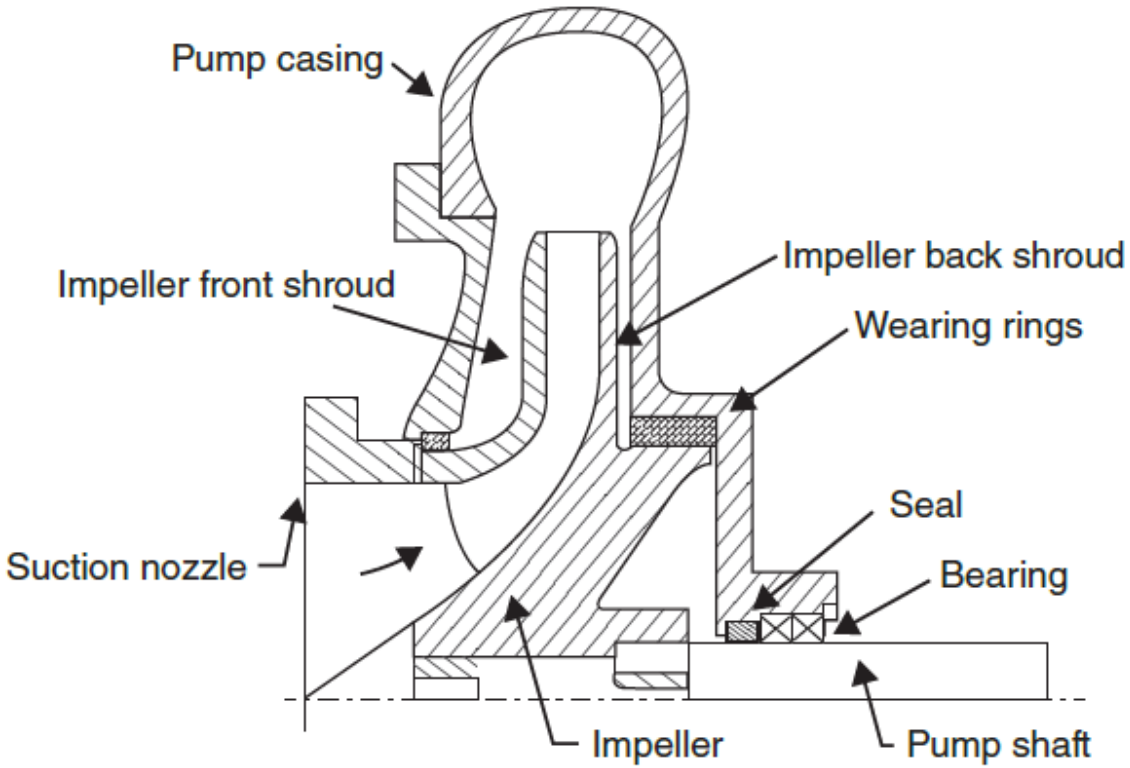

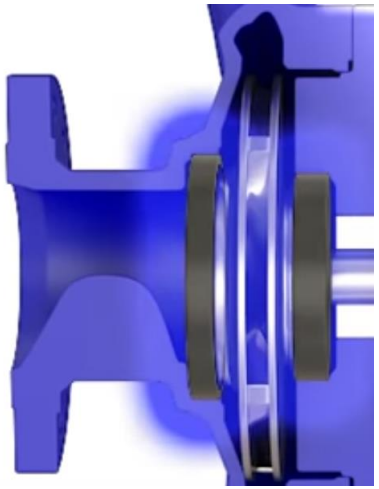

9. **Wearing rings** are commonly used for reducing internal fluid leakage from the high-pressure side (volute casing) to the low-pressure side (suction nozzle).

The main components inside the pump

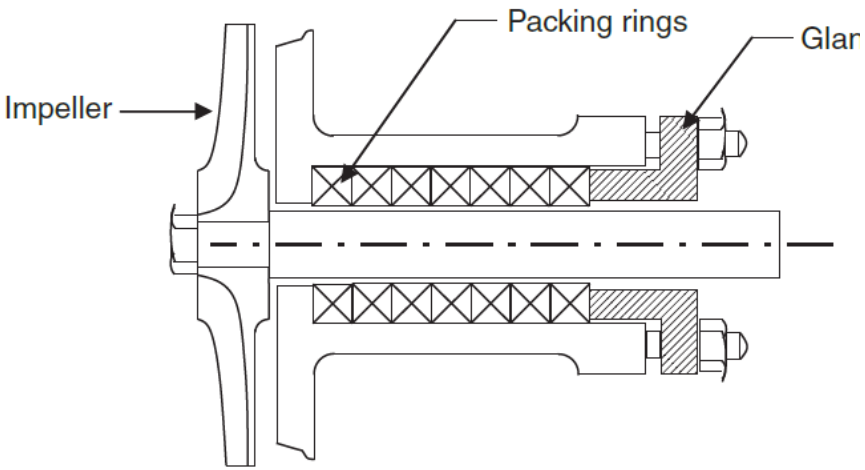

10. **The seals** are very important for every pump since they prevent the pumped fluid from leaking out of the pump.

- The type of seal depends on the pumped fluid.
- For example, a stuffing box with compression packing is commonly used in water pumps.
- while mechanical seals are widely used in pumps handling toxic or flammable liquids, in order to avoid fire and environmental hazards.

What is mechanical seal?

- It is a device that forms a barrier between rotary and stationary parts in the pump. The common parts in all seals are:
  1. Stationary Face.
  2. Rotary Face.
  3. O-rings.
  4. Spring.
  5. Set Screw.

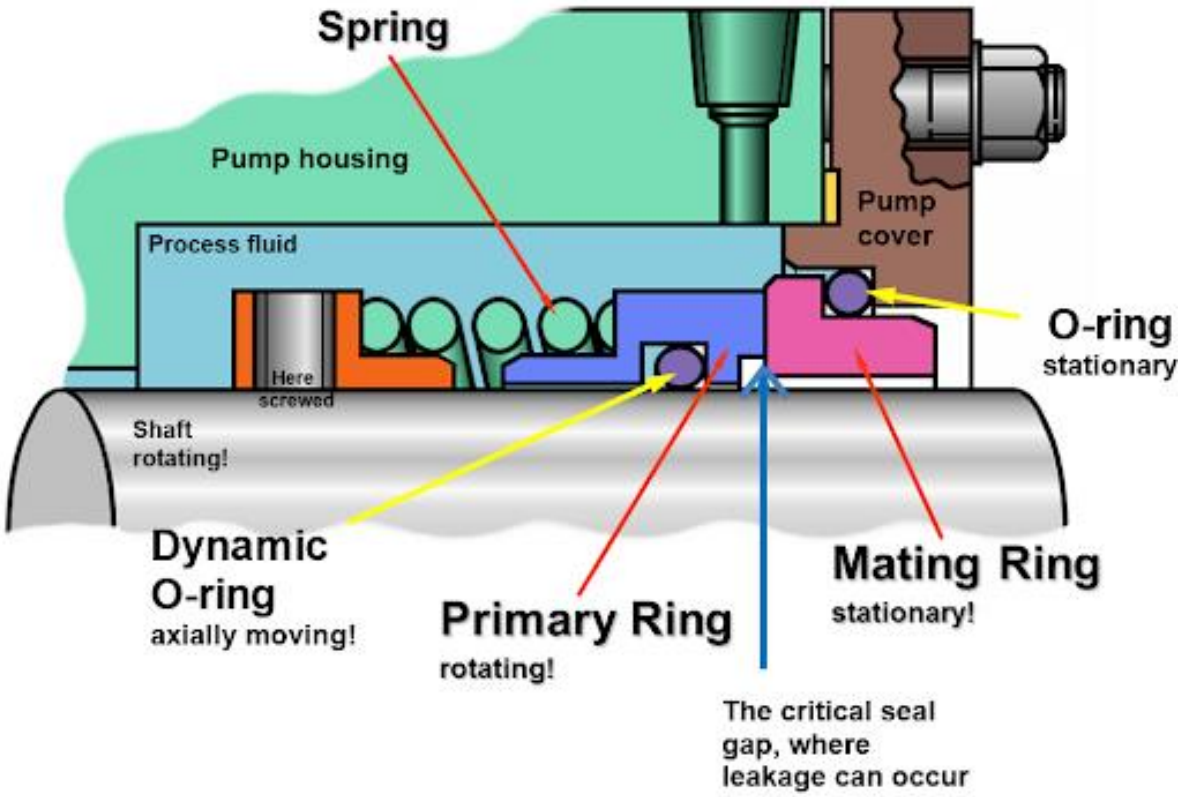

What is mechanical seal?

The seal must block leakage at three points:

- Between the faces (rotary and stationary) of the seal.
- Between the stationary element and the seal chamber housing of the pump.
- Between the rotary element and the shaft.

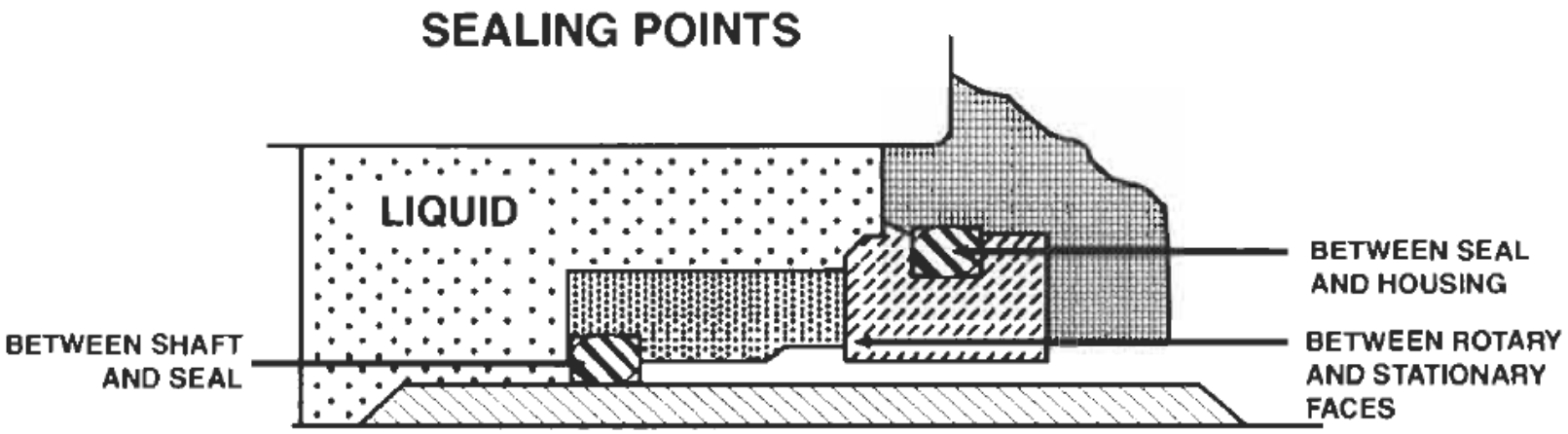

What is mechanical seal?

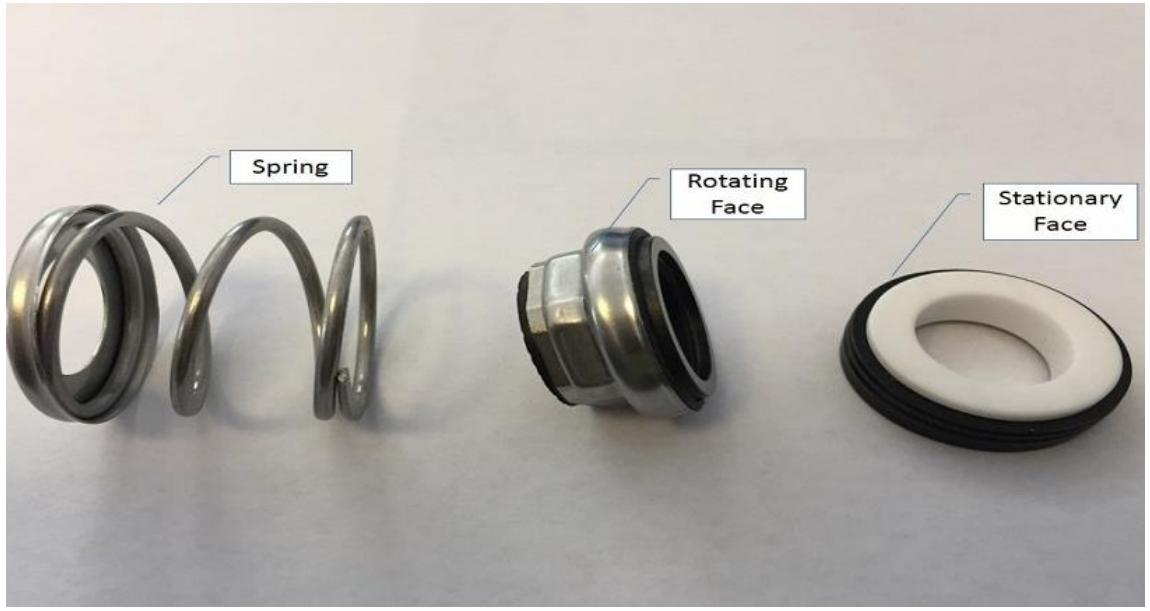

- The **set screw** is connected to the rotary face through the spring. It also provides for the positive and correct positioning of all rotary parts.
- As the faces wear, the **spring** extends maintaining the rotary face in contact with the stationary face.
- The liquid's pressure in the seal chamber holds the faces together and also provides a thin film of lubrication between the faces. This lubricant is the pumped product.

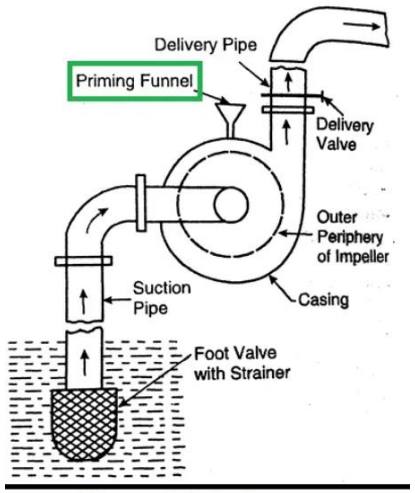

Manual Priming

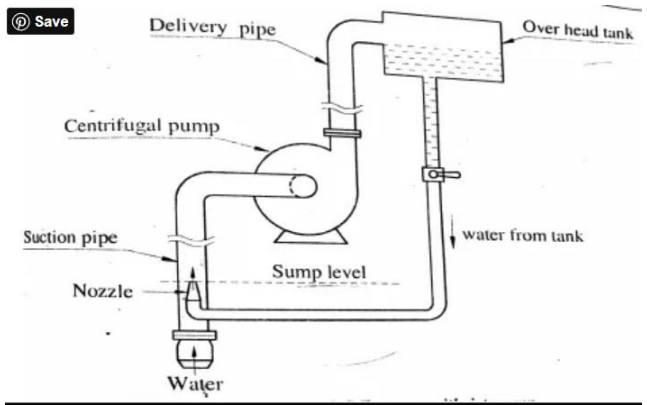

Priming with Jet Pump

Pump Priming

- Pump Priming is the process of removing air from the pump and suction line.
- Priming reduces the risk of pump damage during start-up as it prevents the pump impeller to becomes gas-bound and thus incapable of pumping the desired liquid.
- The pump would not function properly when not completely filled with liquid. Along with compromised performance, not priming the pump and allowed to run without fluid, it will **overheat** the pump system and there will be a danger of damage to critical internal pump components.

What are the types of Losses on Pump?

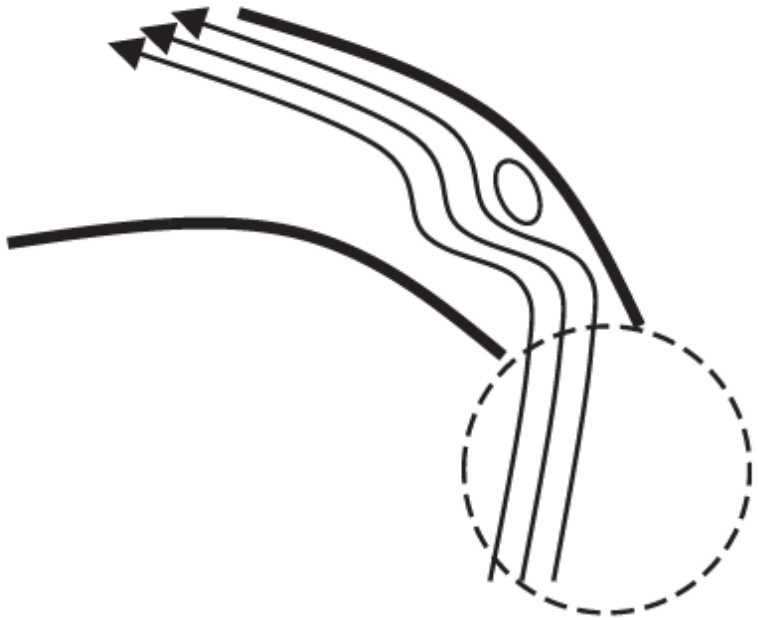

- **Hydraulic loss** is defined as the loss of head between the suction and delivery nozzles of the pump. The loss of energy due to these hydraulic losses has a direct effect on the pump overall efficiency. Hydraulic losses can be divided into:
  1. **Friction losses:** occur in various flow passages of the pump including:
     a) The suction nozzle,.
     b) The impeller flow passages
     c) The volute casing.
     d) The discharge nozzle.
  2. **Shock losses:** if the pump operates away from the operating point, the direction of flow relative velocity at vane inlet is not tangential to the vane.

What are the types of Losses on Pump?

- **Leakage Losses:** represent the loss of energy due to the fluid leaking from the high-pressure side of the impeller to the low-pressure side:
  - Through the clearance space between the impeller and the casing
  - Through balancing chambers or the sealing system.
- Erosion (or erosion/ corrosion) causes an increase in the clearance space between the wearing rings, resulting in higher leakage.
- Replacing or maintenance of the wearing rings is essential for reducing leakage losses.

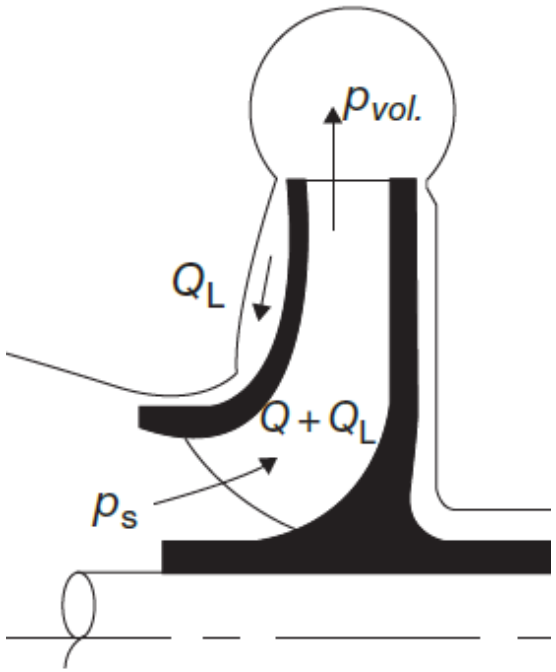

What are the types of Losses on Pump?

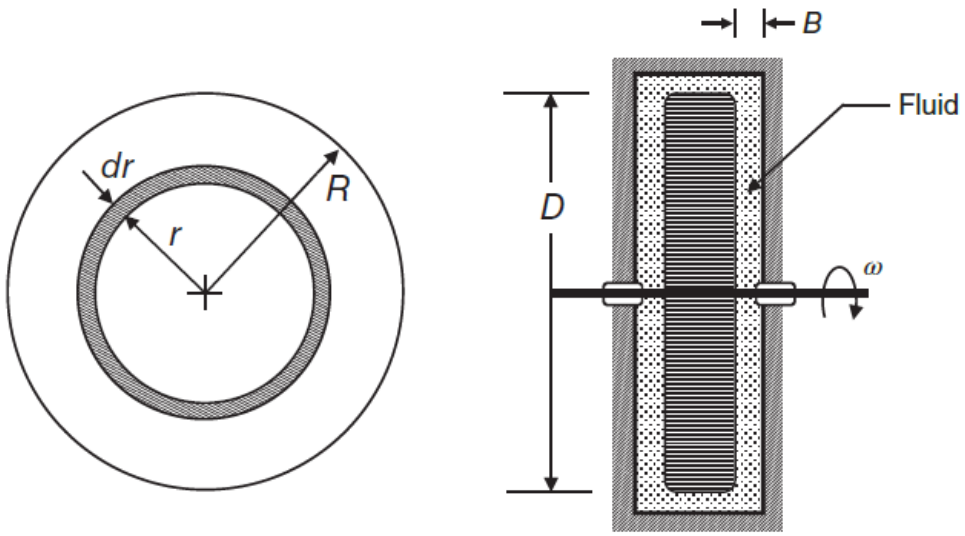

- **Mechanical Losses:** represent the loss of power due to friction:
  - In the bearings.
  - In the sealing systems.
  - In the fluid friction between the impeller and the casing.

What are the types of Losses on Pump?

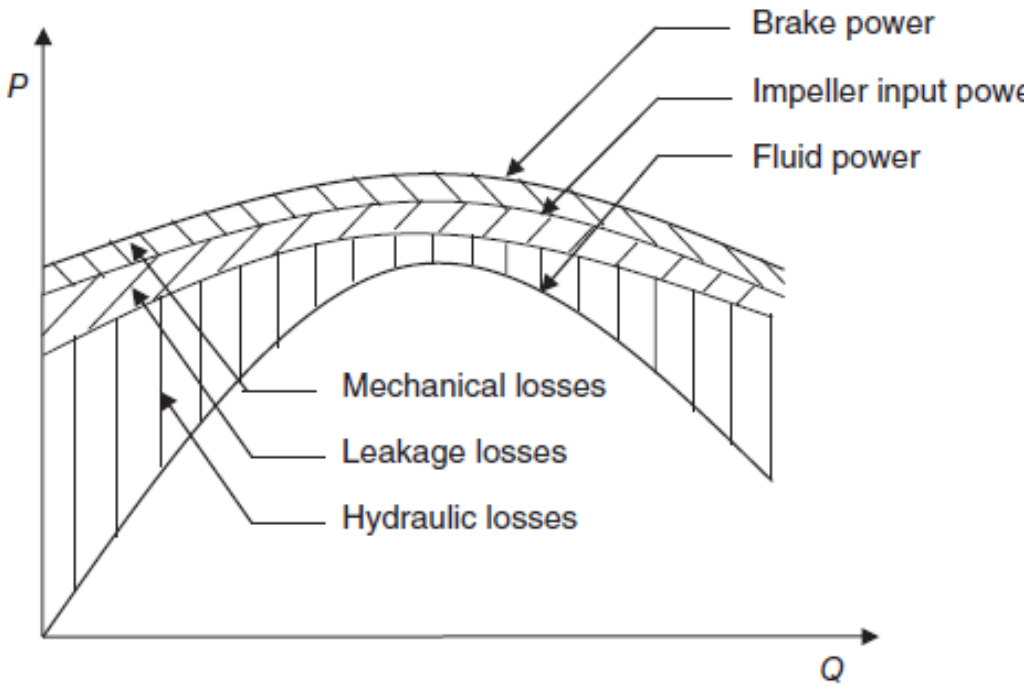

P_{in} =B.P.=$P_{mech.}$ +P_L+ $P_{hyd.}$ + P_{out}

$$P_{in} = \frac{\gamma(Q+Q_L)H_i}{\eta_{mech.}} = \underbrace{B.P.(1-\eta_{mech.}) + \gamma Q_L H_i + P_{hyd.}}_{\text{Loss}} + \underbrace{\gamma QH}_{\text{out}}$$

What is vapor pressure?

- The vapor pressure is a property of a substance.
- The fluid's vapor pressure is the pressure at which the liquid vaporizes at a specific temperature.
- As the temperature of a liquid increases, the vapor pressure increases.
- Figure represents the phase diagram for Water.

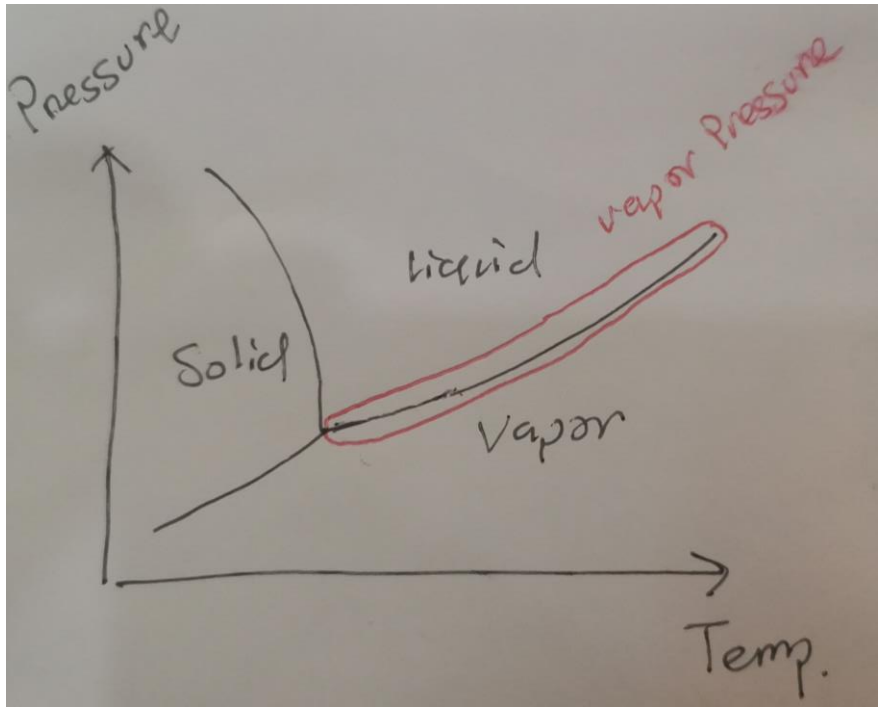

What is NPSH?

- Intro: There will be a pressure drop that will occur to the fluid due to the following:
  1. The friction head loss in the suction nozzle.
  2. The local pressure drop inside the impeller.
  3. The change of the velocity head.
- **NPSH** is the energy/head that the fluid has before it enters to the pump (suction side).
- This energy/this head should be sufficient to avoid any bubble formation inside the pump. This is called **NPSHR.**
- Each system, meaning all pipe, tanks and connections on the suction side of the pump , will have its own NPSH. This is called **NPSHA**.

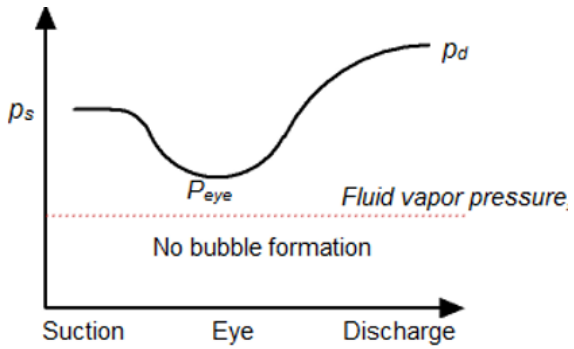

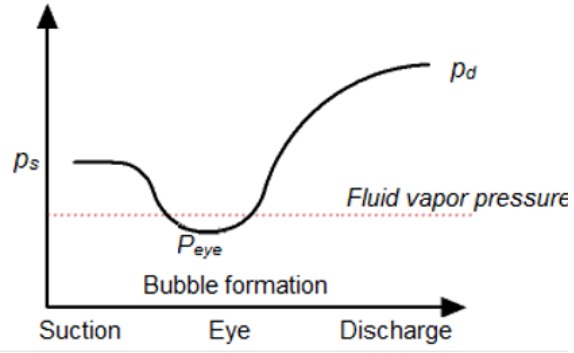

What are the major pump problems? How to solve each one?

1) Cavitation.
2) Solid Particle Erosion.
3) Temperature Rise of Pumped Fluid.
4) Impeller Recirculation.
5) Increase in the unbalanced axial and radial thrusts.
6) Pump Vibration.

1.Cavitation

- **Cavitation** is bubble formation occurring inside the pump due to the pressure drop below the fluid vapor pressure.
- When the fluid pressure increases, the bubbles collapses resulting cavitation erosion on the pump components.

1. Cavitation

- The cavitation depend on:
  1. Flow Rate (Why? By equations)
  2. Th elevation of the pump from the tank (suction lift).

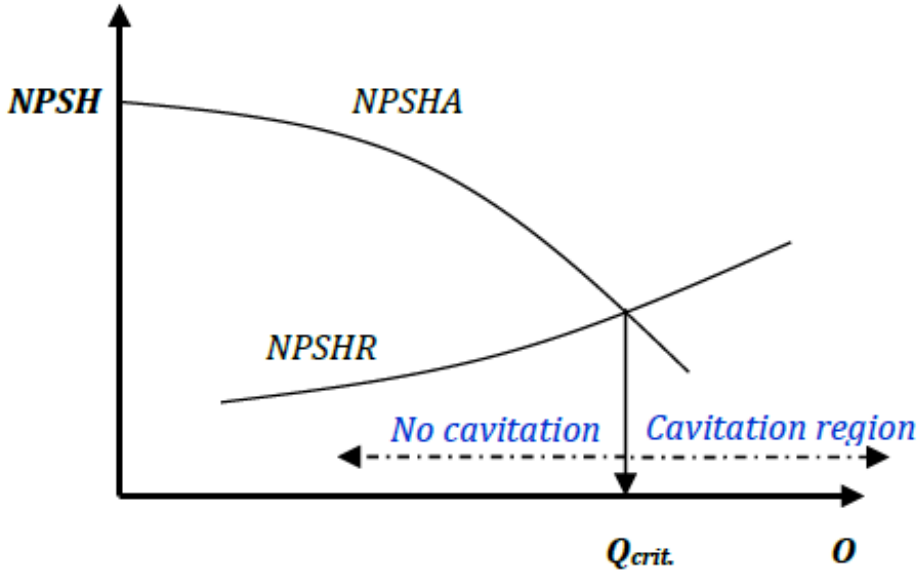

How to prevent cavitation?

1. Install the pump as close as possible to the suction reservoir - reduce the **suction lift**.
2. Use large **diameter pipes** in the suction side – reduce head losses.
3. Reduce the **number of fittings** (such as bends, elbows, valves) in the suction side to a minimum – reduce head losses.
4. Reduce **surface roughness** for all inner surfaces of pump components – reduce head losses.
5. Avoid operating the pump much lower or much higher than **its rated capacity**.
6. Reduce **vibrations** as much as possible.
7. The **jet pump** is used for increasing NPSHA. The jet pump utilizes part of the pumped fluid as a motive fluid for the jet pump.

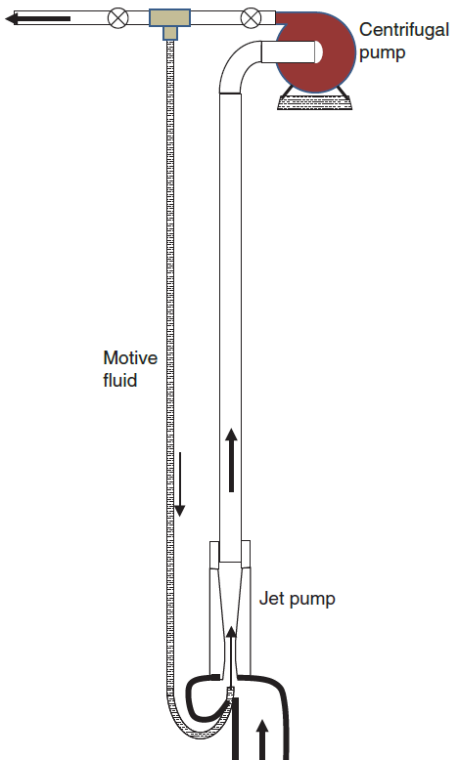

$$NPSHA = \frac{p_{atm}}{\gamma} + (z_a - z_{sn}) - h_{Ls} - \frac{p_v}{\gamma}$$

$$\sum h_L = \frac{f_s L_s V_s^2}{2gD_s} + \frac{f_d L_d V_d^2}{2gD_d} + \sum K \frac{V^2}{2g}$$

2. Solid Particle Erosion

- Erosion caused by the presence of solid particles in the pumped fluid is one of the major sources of surface damage to the impeller and casing materials.
- This damage tends to reduce the overall pump efficiency due to the increase in hydraulic losses (because of the increase of surface roughness) and increase the rate of fluid leakage (due to the increase in the gap between the wearing rings).
- One example is the pumping of **sea water** for cooling purposes.

3. Temperature Rise of Pumped Fluid

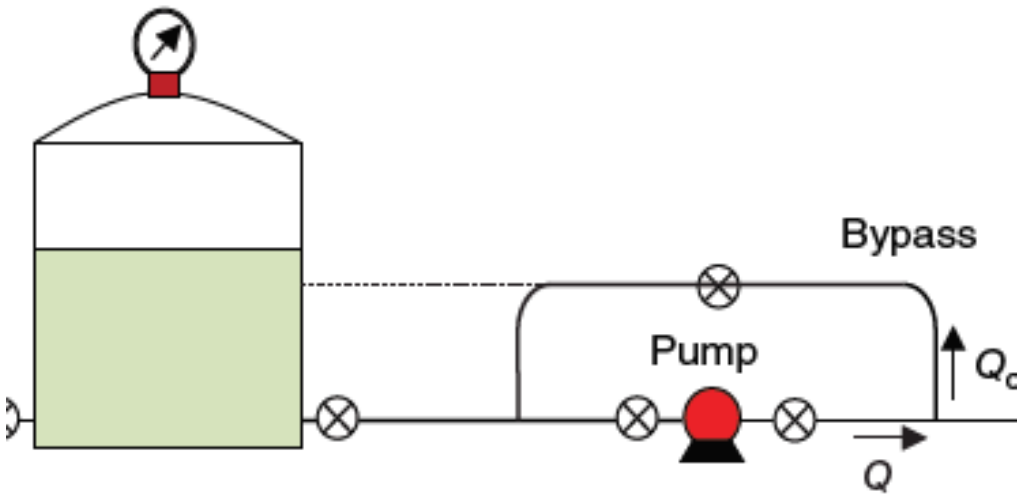

- The fluid temperature increases due to the power losses, when pumps are operated at low capacities either
  1. Using the delivery valve for controlling the flow rate.
  2. Using a bypass.
- It is recommended to have the bypass flow returned to the suction vessel rather than to the suction pipe. This will lead to a smaller increase in the fluid temperature.

4. **Impeller Recirculation** due to the Operation at Other Than the Normal Capacity

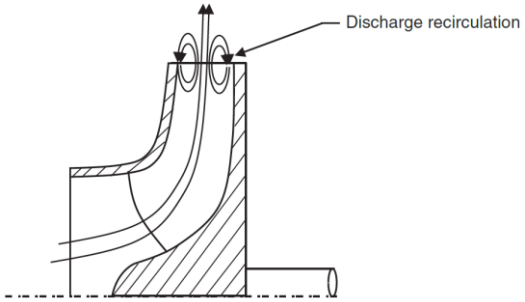

- Impeller internal recirculation is a phenomenon that takes place at the impeller inlet eye or exit section **at low flow rates.**
- This internal recirculation leads to cavitation which is completely independent of *NPSHA*.

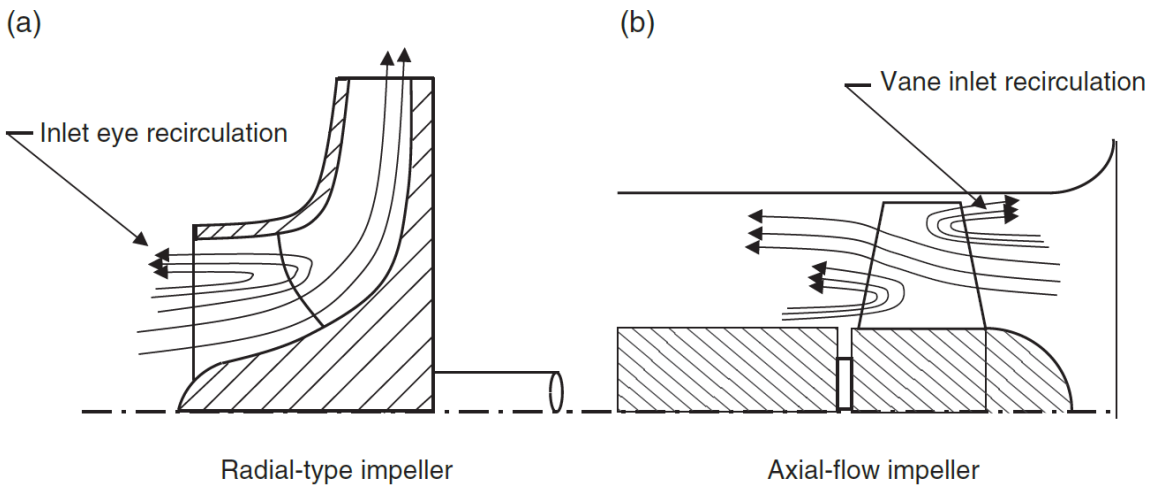

5. **Increase in the unbalanced axial and radial thrusts** due to Operation at Other Than the Normal Capacity

Radial Loads

- While the fluid pass through the volute, there will radial load generated.
- The solutions are:
  - Use of **Diffuser Vanes** (Reduces the radial load only at the design point).
  - Use of **Double-Volute Casing** (Reduces the radial load at any capacity).

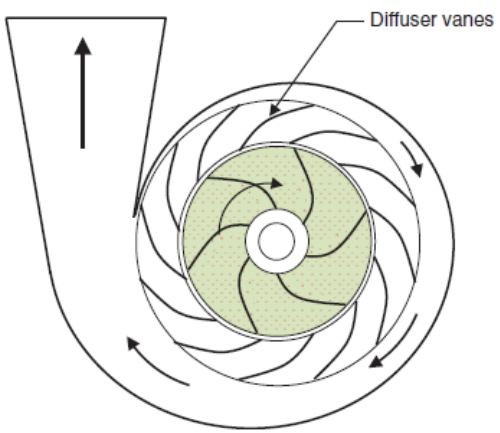

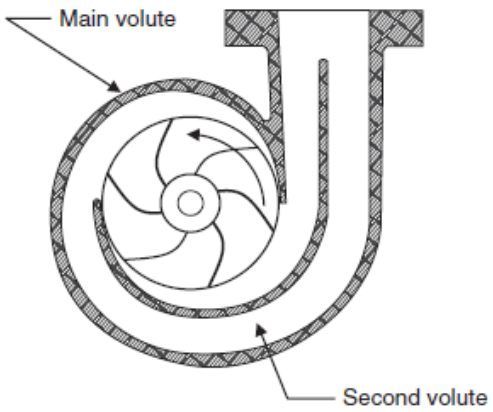

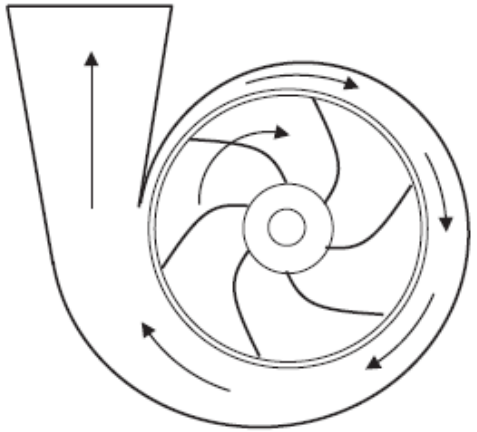

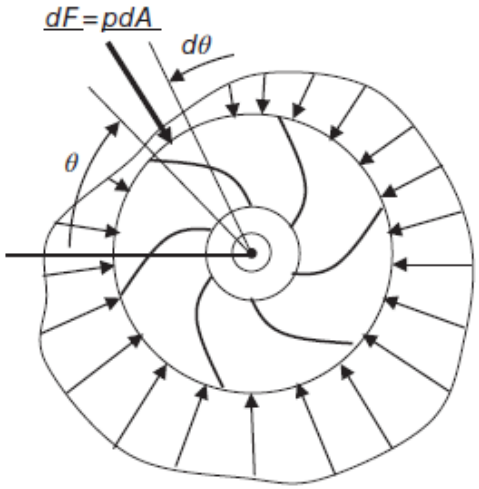

Axial Loads

- The axial load is the resultant of forces on pump impeller due to pressure differential inside the pump between the low-pressure side (suction side) and the high-pressure side (discharge side).
- The solutions are:
  1. **Thrust bearing**.
  2. **Pump-out Vanes:** The pressure reduction is mainly due to the increase of speed of rotation of the fluid entrained in the clearance space between the impeller and casing.
  3. **Double Suction Impellers**

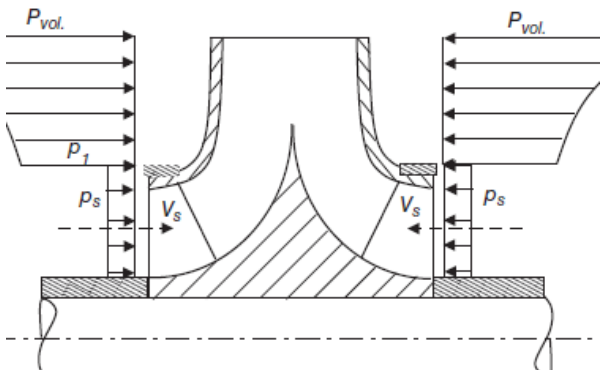

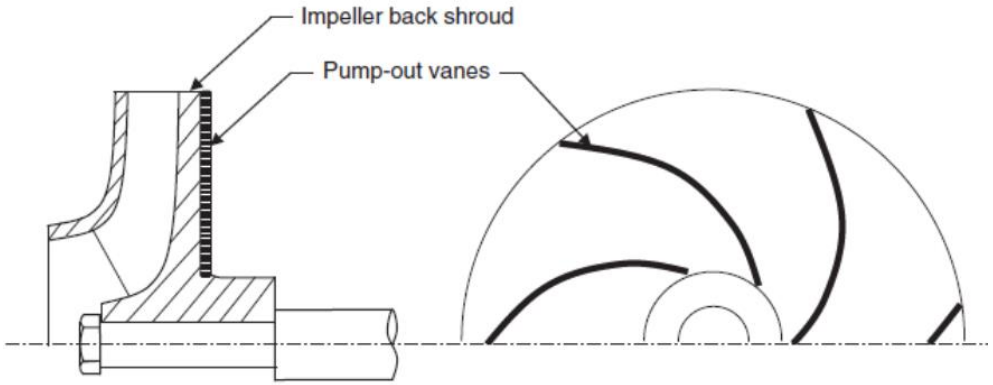

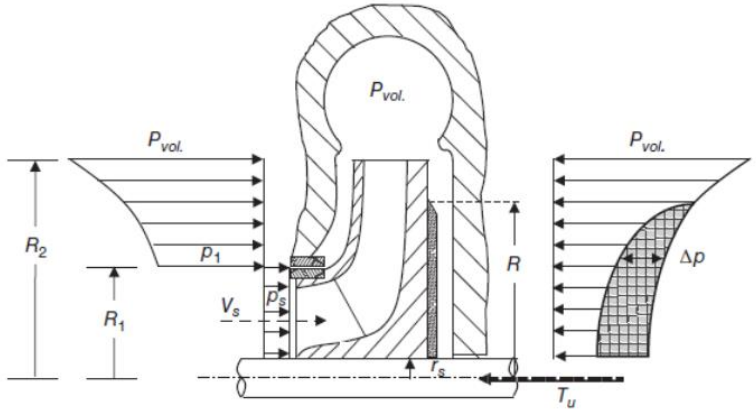

Axial Loads

The solutions are:

4. **Balancing Drum/Disk:** The area on the seal chamber side of the balance drum is subjected to the pump suction pressure. While the area on the impeller side of the balance drum is exposed to the high-pressure fluid in the pump. The difference in fluid pressure across the balance drum provides a force on the balance drum that is opposite to the direction of axial hydraulic thrust from the impellers.
5. **Opposed Impellers configuration.**

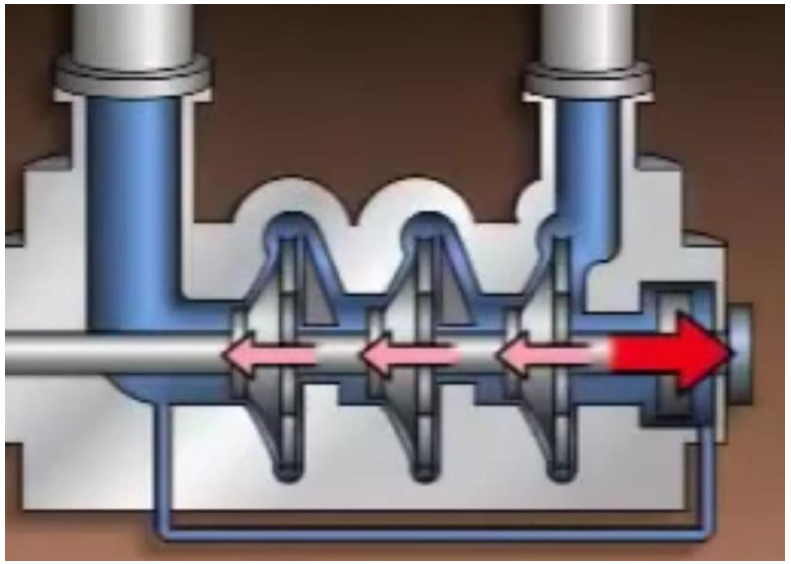

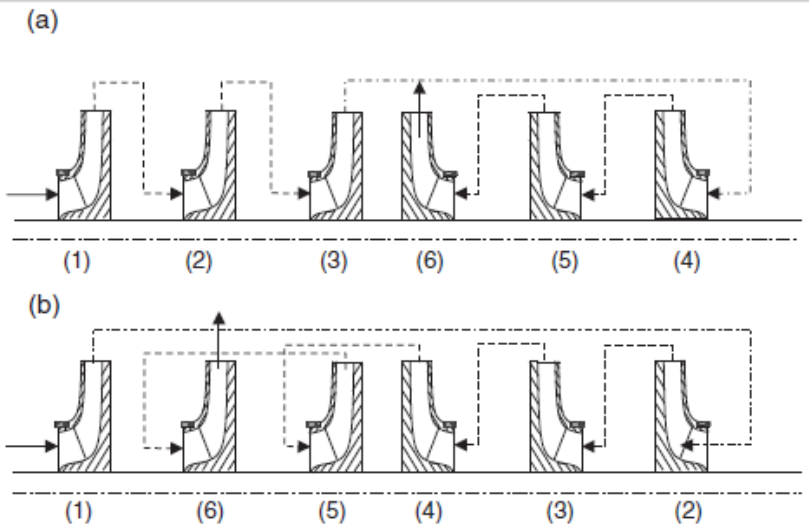

6. Pump Vibration - Major Pump Problems

1. Impeller unbalance due to **erosion/corrosion** of impeller material.
2. **Operation near shaft critical speed** (that is the theoretical angular velocity which excites the natural frequency of a shaft).
3. **Misalignment** of pump and driver shafts.
4. Faulty bearings (e.g. **worn bearings**).
5. Formation and implosion of vapor bubbles due to **cavitation**.
6. Pump operation away from its best efficiency point (BEP).
7. Vibrations from **nearby equipment**.

Flow Rate Control in Pumping Systems

1. Speed control of the pump driver
2. Delivery valve throttling
3. Impeller trimming
4. Partial circulation of the outflow using a bypass
5. Operate the system using more than one pump
6. Use of a storage tank
7. Using Inlet Guide Vanes for Flow Rate Control

1. Speed Control of the Prime Mover

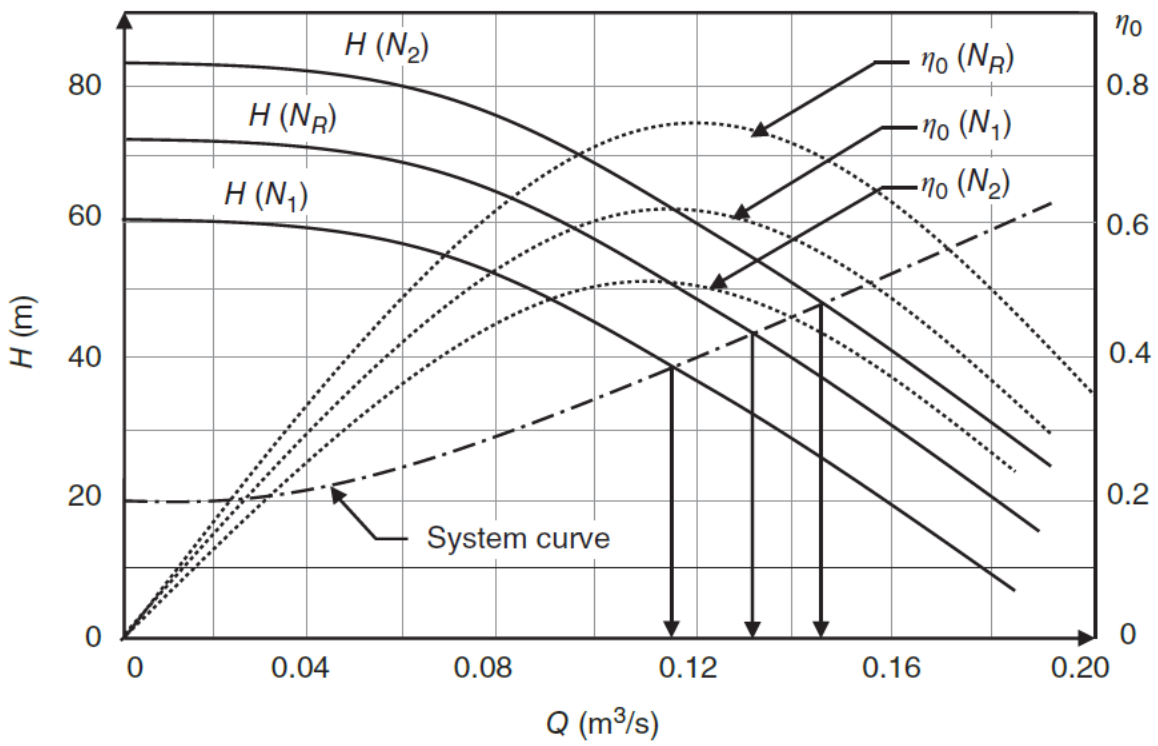

- The pumping system flow rate can be increased or decreased by driving the pump at a higher or a lower speed. However, operating the pump at speeds higher or lower than its rated speed will result in less overall efficiency.
- Moreover, electric motors with speed control are more expensive.

2. Delivery Valve Throttling

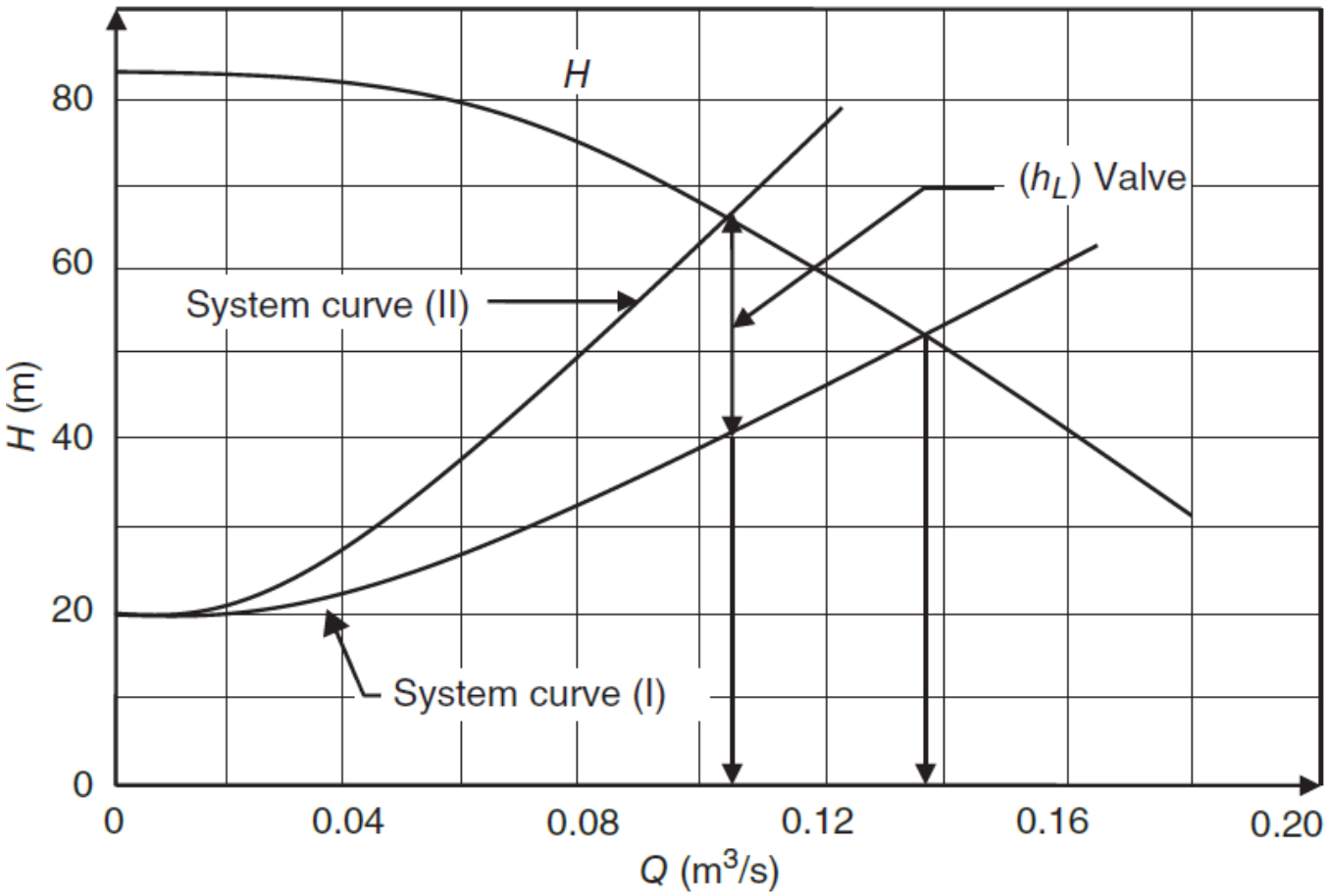

- The system flow rate can be reduced by partial closure of the delivery valve.
- Although this is the cheapest and most common method for flow rate control, it is accompanied by a large amount of energy loss, which can be as high as 50% or more of the pump output power.

3. Using Bypass for Flow Rate Control

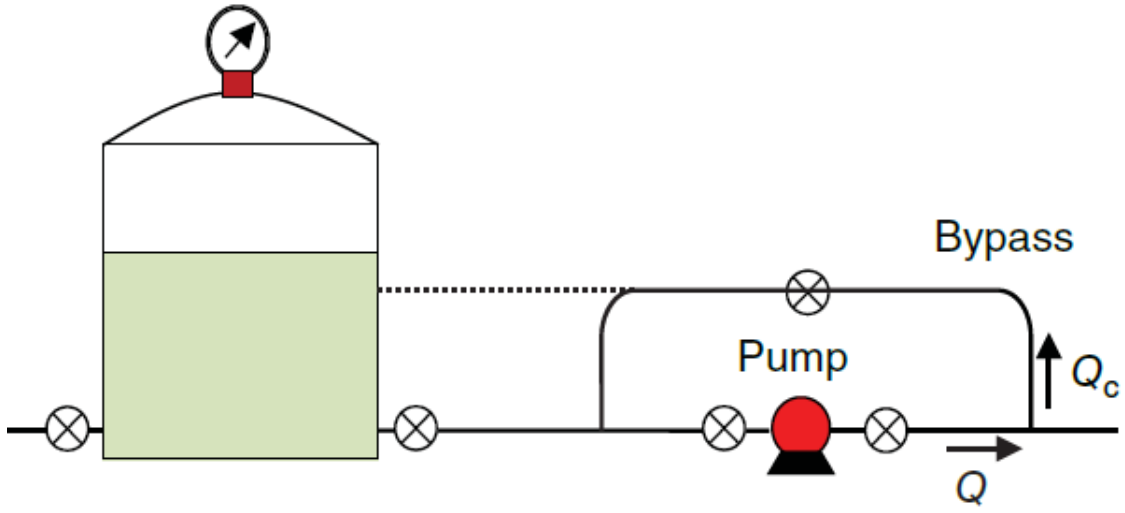

- In this method, part of the pump outflow is circulated back to the suction pipe or to the suction reservoir.
- The main advantages of this method are its low cost and simplicity.
- The disadvantages include:
  - The high-power loss in fluid friction.
  - The temperature increase of the circulated flow.

4. Use of a Storage Tank

- Sometimes the system demand temporarily exceeds the normal capacity of the pumping station (e.g. in a city water network). In this case, a water tower can be a good solution.
- Used for emergences.

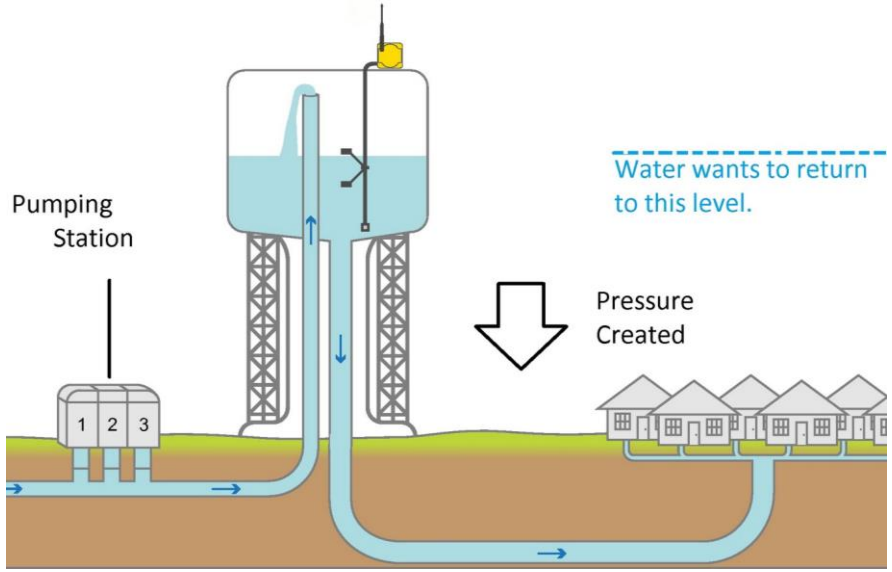

5. Flow Rate Control by Operating Pumps in Parallel or in Series

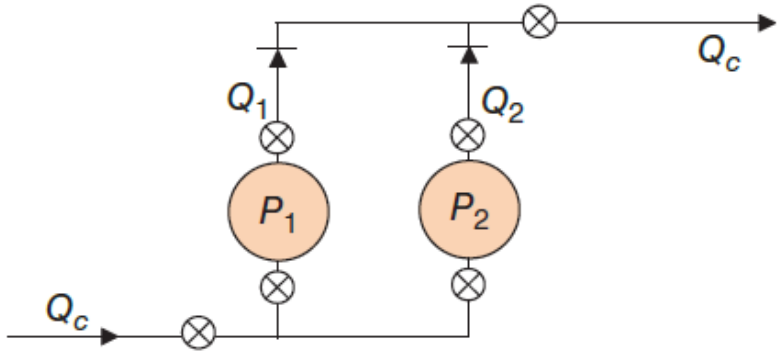

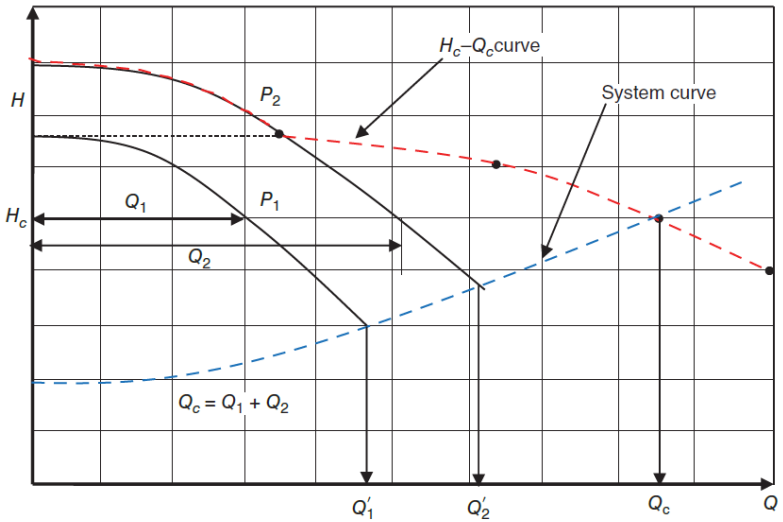

Pumps in series **vs** Pumps in parallel

Parallel Operation

- Identical or different pumps may be connected in parallel in order to **increase the volume flow rate** through a piping system.
- Qc =Q1 +Q2 (Theoretically)
- Hc =H1 =H2
- The system is analogous to the operation of two batteries connected in parallel. The flow rate is similar to the current and the total head developed is similar to the potential difference.

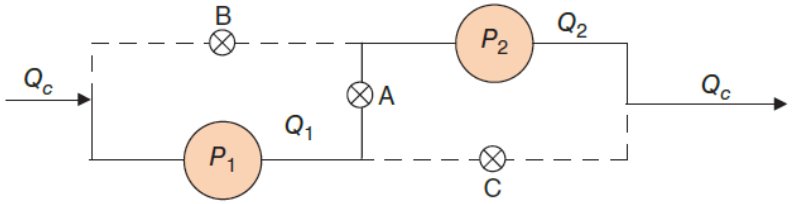

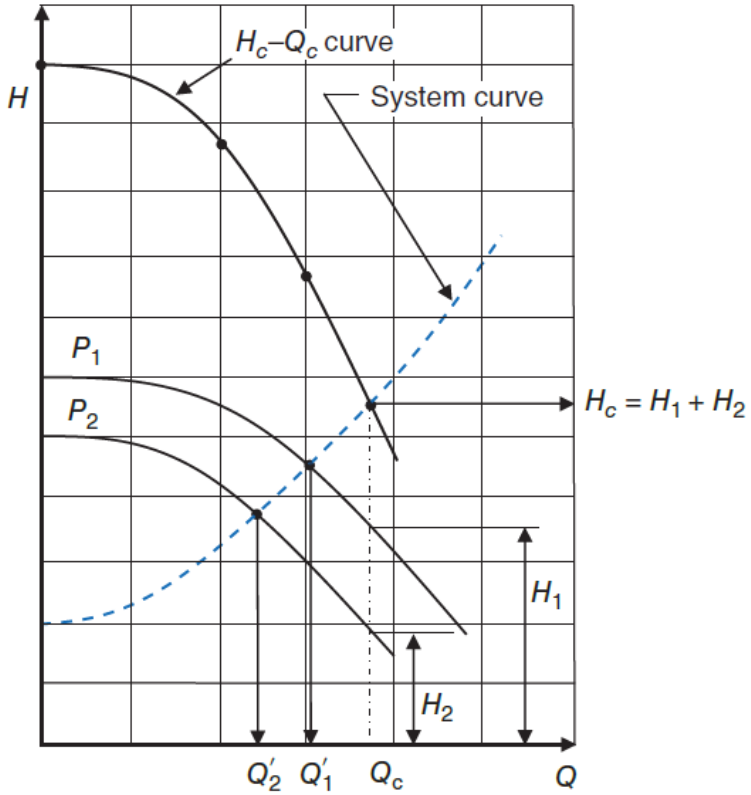

Pumps in series **vs** Pumps in parallel

Series Operation

- Consider the two different pumps P1 and P2 connected in series, as shown in the figure. The combined H–Q curve (Hc–Qc) for the two pumps can be plotted using the equations
- Qc =Q1 =Q2
- Hc =H1 +H2 (Theoretically)

6. Impeller Trimming

- In this method, the impeller outer diameter is reduced by **machining** in order to **decrease the pump flow rate** when operating in a given system. The amount of reduction in the impeller diameter is normally small (10–20%) and should not affect the hydraulic performance of other parts.

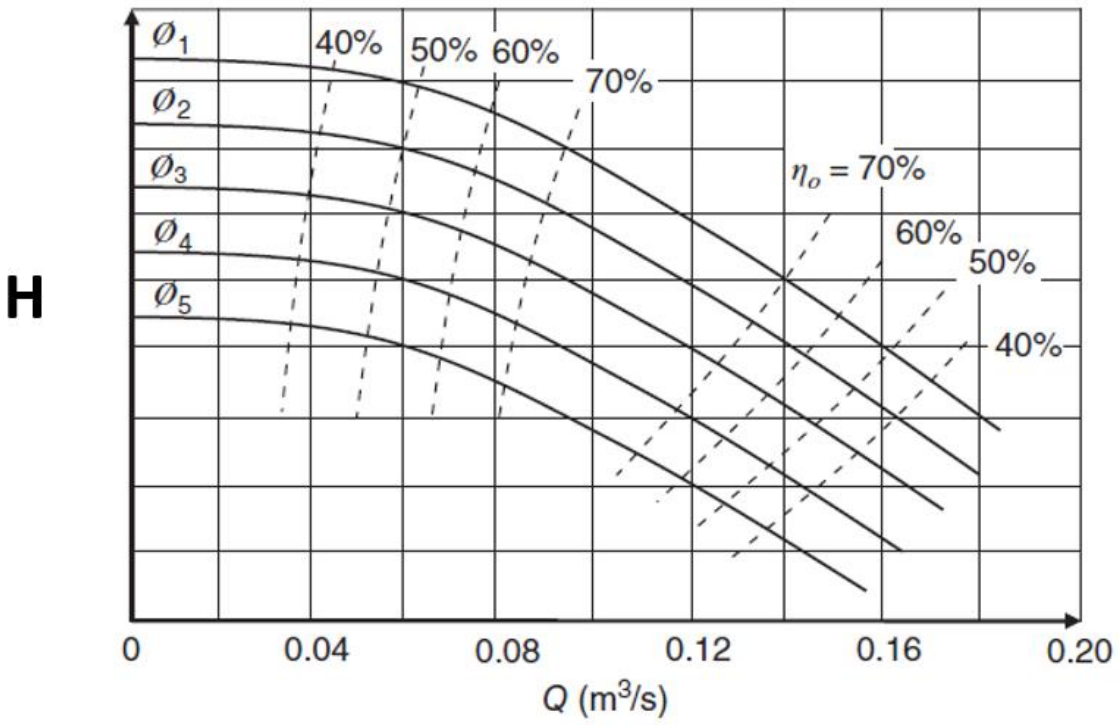

φ1 > φ5

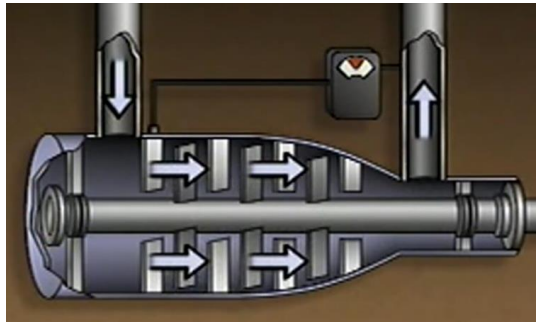

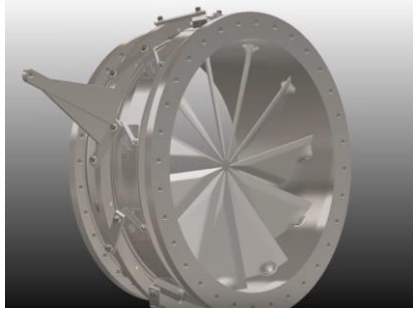

7. Using Inlet Guide Vanes for Flow Rate Control

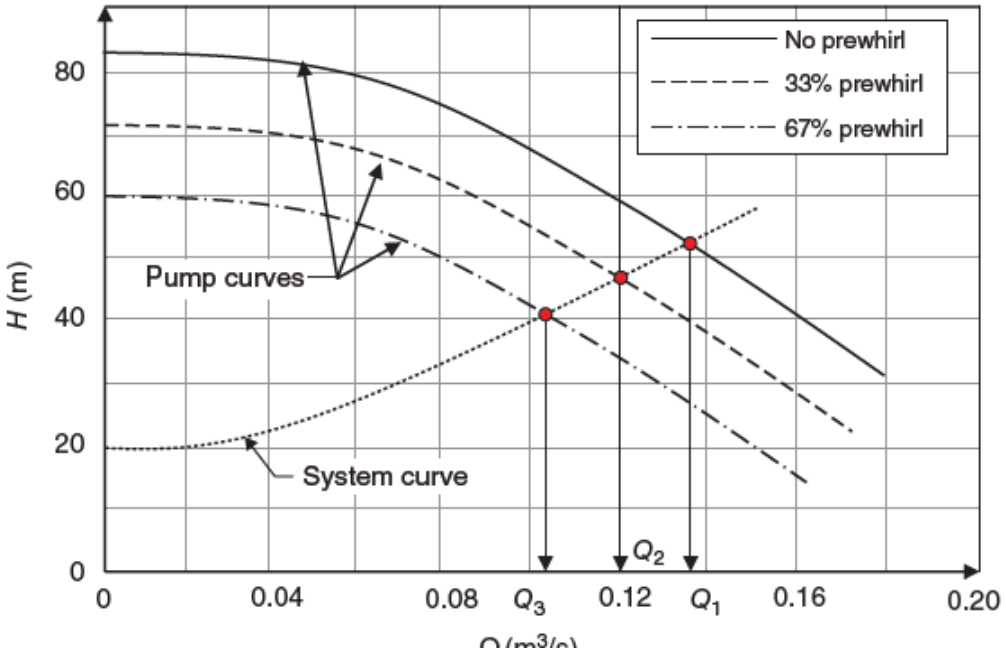

- The use of inlet guide vanes for flow rate control is common in fans and compressors and also in axial flow pumps but less common in radial-type centrifugal pumps.
- The idea is to have a set of guide vanes upstream of the impeller (close to the impeller inlet) to create **prewhirl** before the vane inlet.

Why eccentric reducer is used at pump suction?

- **Eccentric reducer**. **Eccentric reducers** are **used** at the **suction** side of **pumps** to ensure air does not accumulate in the pipe. The gradual accumulation of air in a concentric **reducer** could result in a large bubble that could eventually cause the **pump** to stall or cause cavitation when drawn into the **pump**.

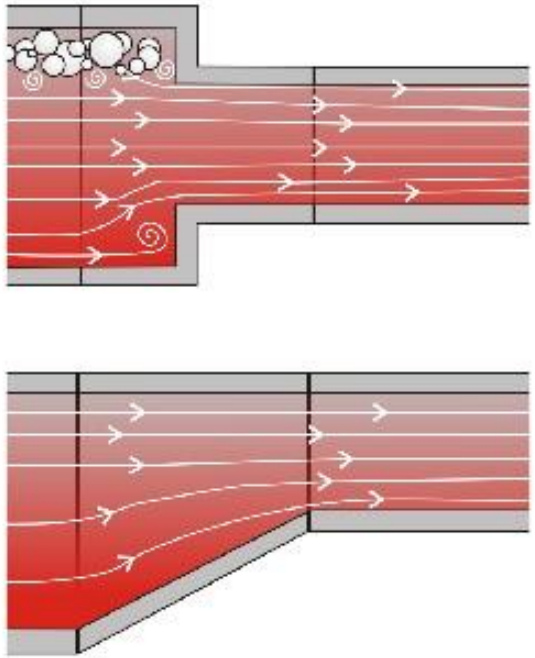

Eccentric reducers eliminate air/vapour pockets and minimize friction

Displacement Pumps

- In these pumps, energy is added to the fluid by the direct application of a force that moves the fluid from the low-pressure side (suction side) to the high-pressure side (delivery side).
- For applications in which a **small flow rate** is required to be supplied at **high pressure**, the use of displacement pumps becomes unavoidable.
- They also maintain sufficiently high efficiency when operating at flow rates lower or higher than their normal capacities.
- The specific speed range for displacement pumps (Ns < 500) is the lowest of all types of pumps because of the low flow rate and high head characteristics.

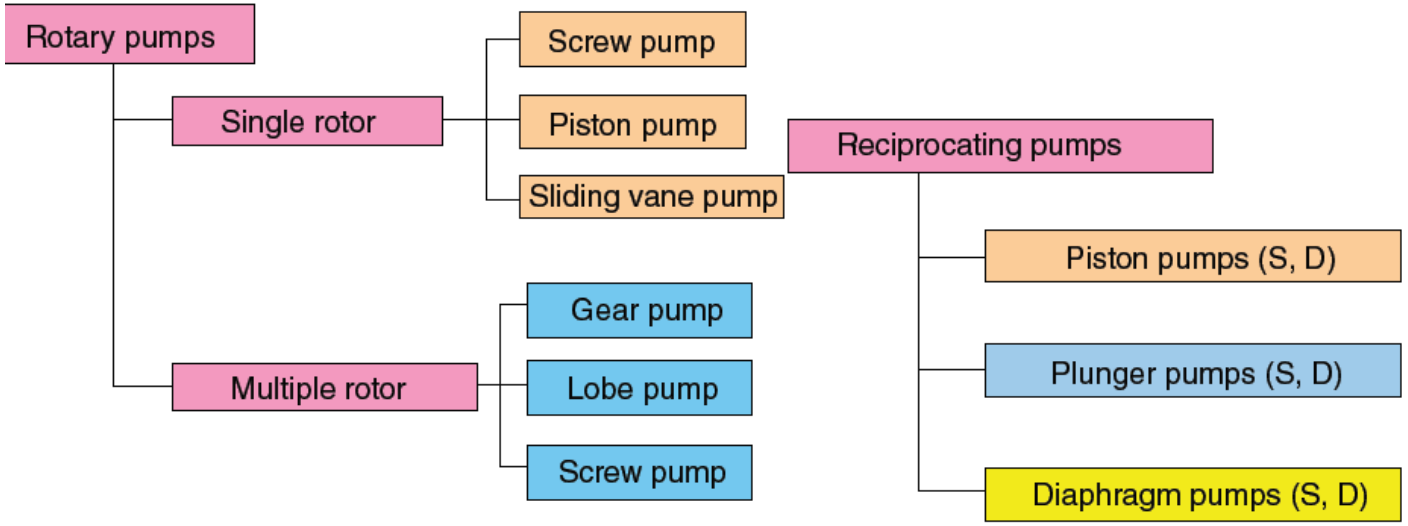

Figure 7.1 Classification of reciprocating and rotary displacement pumps

Reciprocating Pumps

- These pumps are used in many industrial applications such as pumping heavy petroleum products in pipelines and chemical industries.
- **Diaphragm pumps** are operated either mechanically or pneumatically. They can handle highly viscous fluids, fluids with a high percentage of solid contents and corrosive or abrasive fluids (concrete, acids, and other chemicals).
- The flow delivered by a reciprocating pump is always **fluctuating** in a periodic fashion, thus creating pressure pulsation.

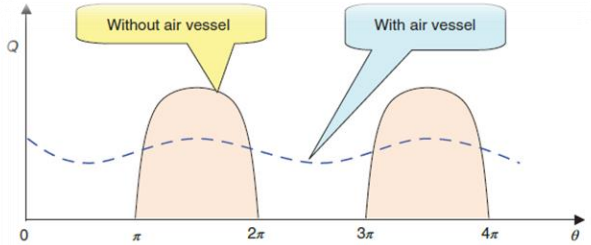

igure 7.11a Flow rate fluctuations for a single-cylinder single-acting piston pump.

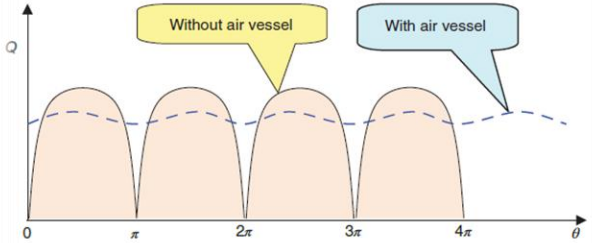

igure 7.11b Flow rate fluctuations for a single-cylinder double-acting piston pump

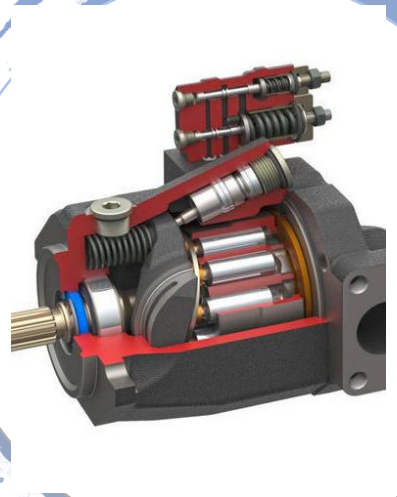

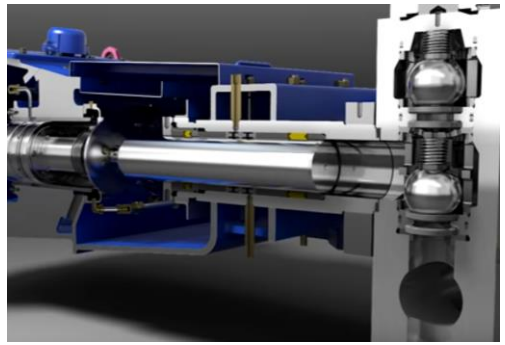

Rotary Pumps

- In comparison with reciprocating pumps, rotary pumps produce much less fluctuation in the flow rate, and they can operate at much higher speeds.
- Rotary pumps are also used as fluid meters since the volume of liquid supplied depends mainly on the number of revolutions of the driving shaft.

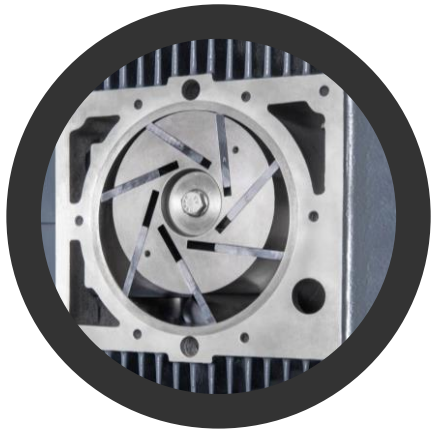

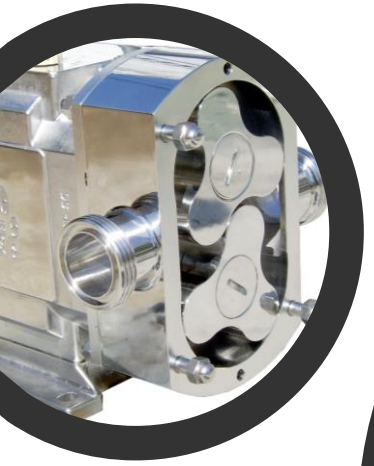

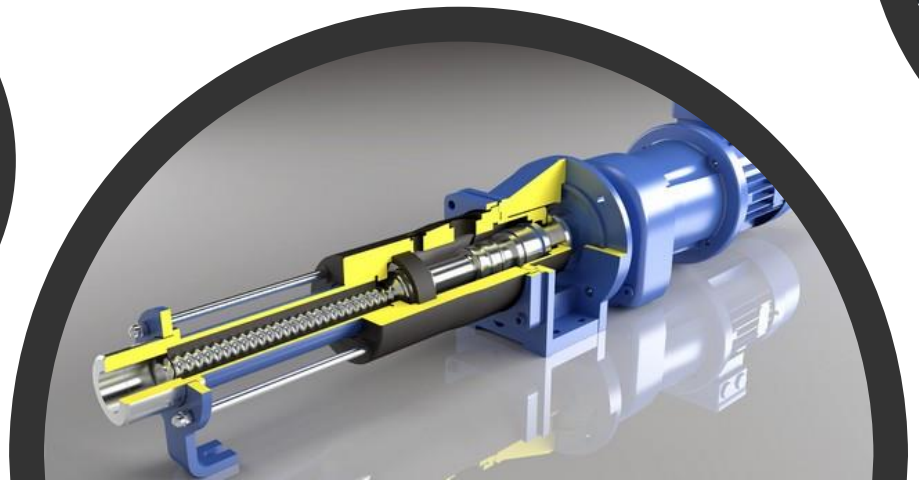

How can you select a pump?

TYPE OF PUMPED FLUID.

OPERATING CONDITIONS.

RELIABILITY AND MAINTAINABILITY.

INITIAL AND OPERATING COST.

Selection Based on Type of Pumped Fluid

The fluid properties of direct relevance to pump selection are the following:

1. Fluid viscosity and density
2. Fluid chemical activity (corrosiveness)
3. Flammability or toxicity of the pumped fluid
4. Presence of solid particles in the fluid (e.g. sea water, crude oil, etc.)
5. Presence of gas contents (e.g. natural gas in oil production facilities)
6. The fluid vapor pressure and its variation during normal operation.

Selection Based on Operating Condition

1. Location of the pump/pump station relative to the fluid in the suction reservoir.
2. Diameter, length, and surface roughness of all pipes
3. Type of all pipe fittings (valves, bends, filters, flowmeters, etc.)
4. Normal operating temperature of the pumped fluid.
5. Type and characteristics of the prime mover (simple induction motor, variable speed motor, diesel engine, steam turbine, etc.)
6. Methods of flow rate control (valve throttling, inlet guide vanes, speed of prime mover, etc.)
7. Mode of pumping system operation (continuous, intermittent, etc.)

Selection Based on Reliability and Maintainability

In some applications, the pump reliability becomes the most important factor in the pump selection process.

- Multistage submersible pumps
- The pumps used in aircrafts, rockets, and spacecraft

Selection Based on Initial and Operating Cost

- The direct cost of operation per year depends on:
  - The initial cost of equipment and installation.
  - The cost of power.
  - The cost of maintenance.
  - The cost of labor including periodic technical inspection.

Compressors

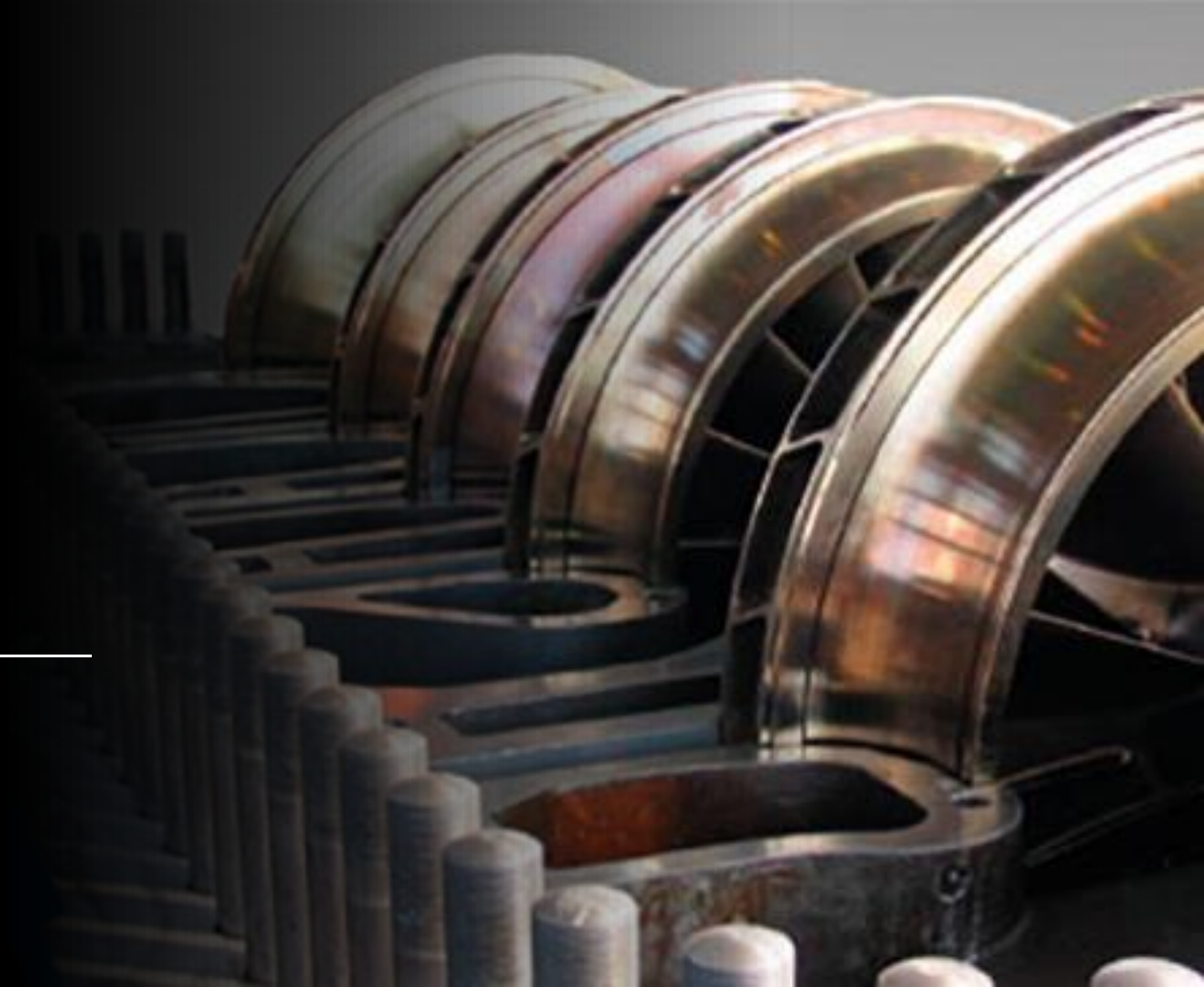

What is the difference between the pump & compressor?

In term of	Pumps	Compressors
1. Solid Particles	Pumps can handle liquids that may contain some solid particles (such as river water, sea water, or crude oil).	Compressors are very sensitive to the presence of solid particles in the gas. Due to the high speeds inside the compressor, solid particles impacting the impeller vanes create severe erosion.
2. Thickness of the impeller vanes	Thick (because of the liquid density)	Thin (because of the gas density)
3. Speed Ranges	Low speed, example: 1600 RPM	High speed, example: 16,000 RPM
4. Sealing System	Packing Seal, Mechanical seal.	More advance sealing system such as oil lubricated seal, dry gas seal, and carbon ring seal. (because of the low gas viscosity)
5. Inducer in impeller?	No	Yes, used to reduce the hydraulic losses.
6. Temperature Change?	No	Yes (PV= mRT)
7. Cavitation	Liquids can cavitate and damage the pump internal parts.	Gases cannot cavitate.
8. Flow Type	Incompressible Flow	Compressible Flow
9. What happen in case of using different fluid?	A pump cannot compress a gas, the impeller will just spin in the air inside the pump housing.	A compressor cannot pump a liquid (it might, for a little while, but it would eventually fail).

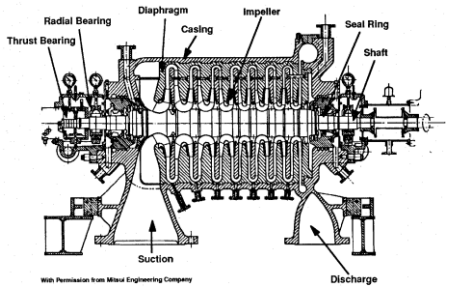

List the main components inside the compressor?

- The main components of the centrifugal compressor are much the same as those for a pump; however, the compressor impeller vanes have an **inducer** section.
- The main function of the inducer is to reduce the hydraulic losses (friction and shock losses).
- The figure shows a large number of vanes in comparison with a pump impeller. This is mainly to reduce the relative circulation in the channel between the vanes due to the high speed of rotation.

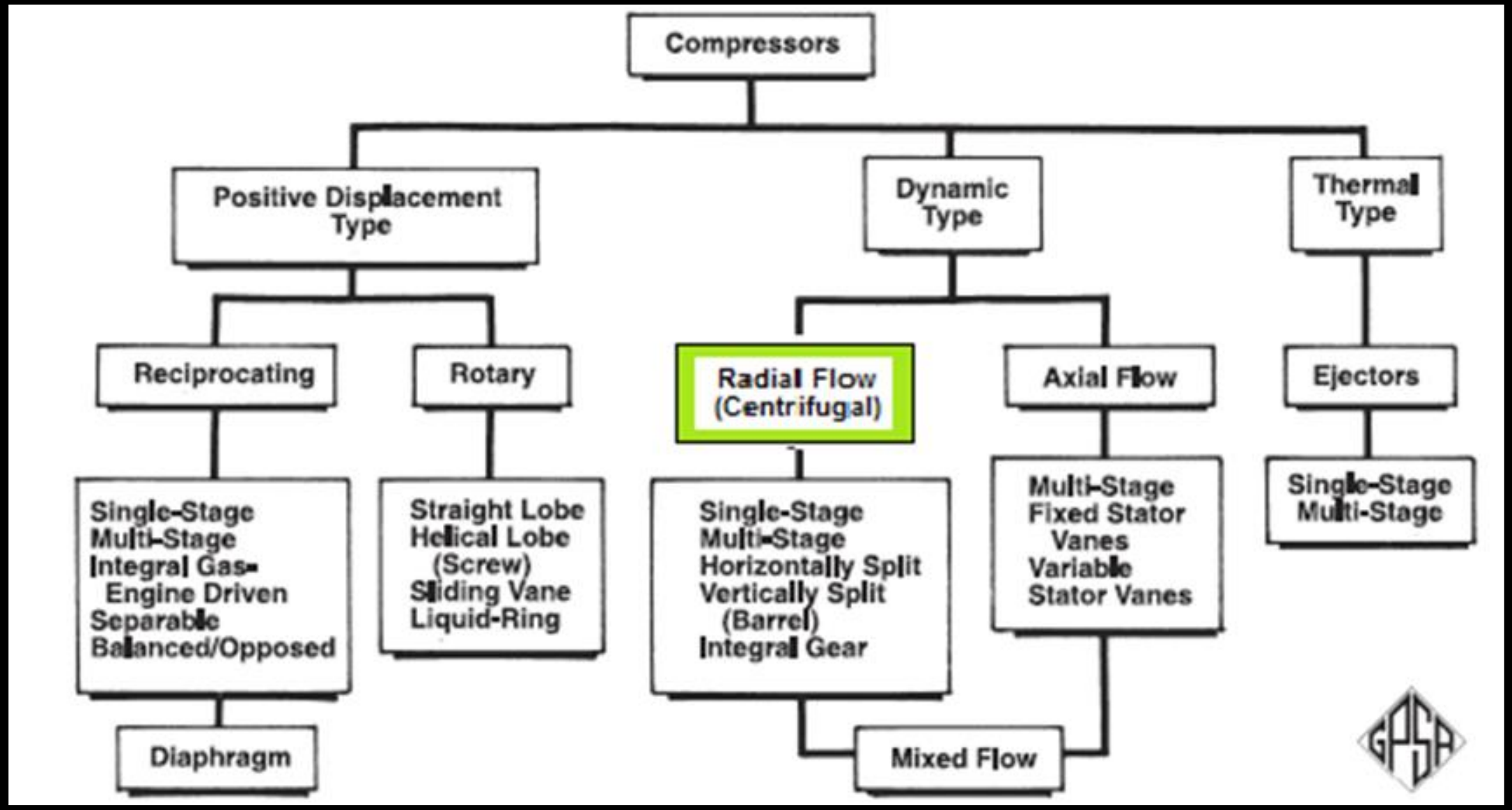

Types of Compressors

Compressor Performance Characteristics

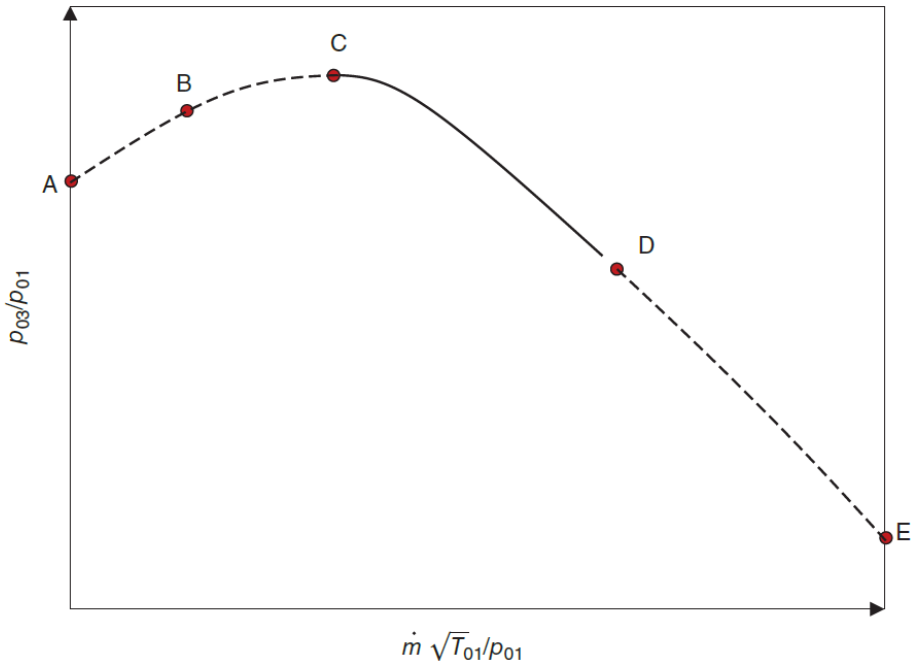

- The compressor performance is normally presented in terms of three curves representing the variation of each of the stagnation pressure ratio (*p*03/*p*01) and the overall efficiency (*ηo*) with the mass flow rate (*m*•**)** when operating at a constant speed.
- Instead of using the head as the y-axis, the ratio b/w the compressor discharge pressure and the impeller inlet eye pressure is used here.
- Point A in represents the shut- off condition when the delivery valve is fully closed.
- The region between points A and C is an unstable region due to compressor surge, and point D is a choking point at which any of the compressor flow passages is choked.
- So the dotted lines AC and DE represent regions of unsafe and unavailable operating conditions, respectively.

What is Compressor Surge?

- Compressor surge refers to unstable performance resulting in flow rate and pressure fluctuations that may lead to The effect of Compressor Surge:
  - Flow Reversal
  - Compressor vibration.
  - Failure of the seal or the thrust bearing, or even the impellers.
- The flow rate unsteadiness in this system may result from different sources such as a change in system resistance due to obstruction in the discharge side.

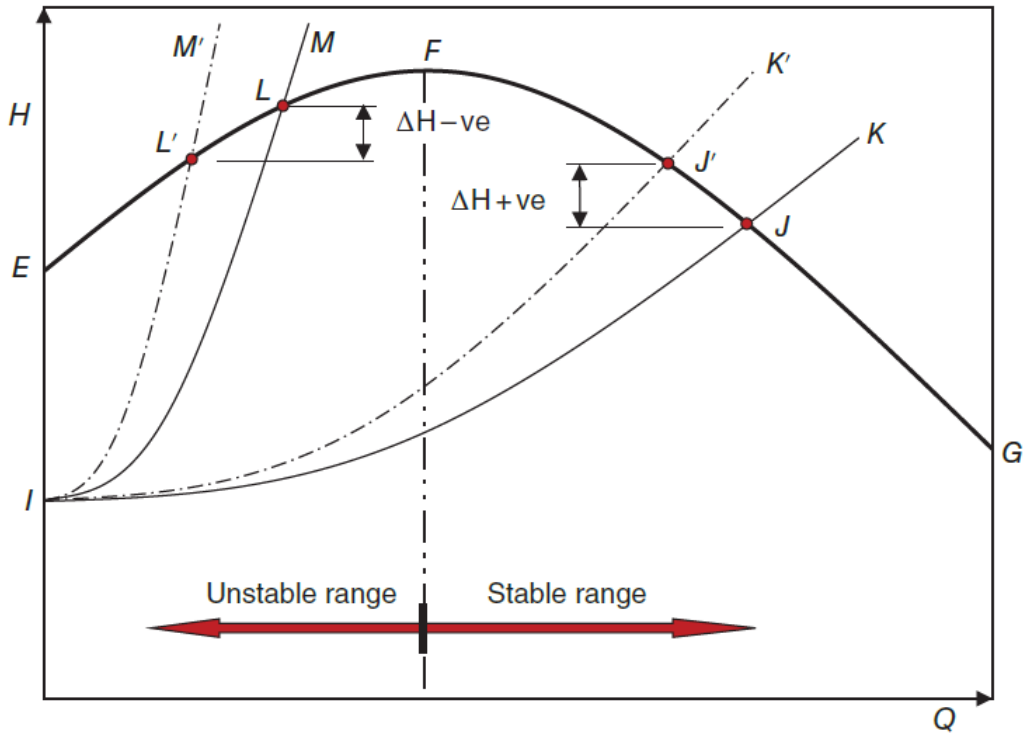

Case 1

- Suppose that the partial valve closure at C causes the point of operation to move to point J’ and the system curve changes momentarily to I’J’K’. The compressor response to additional resistance of the system is an increase in the pump head and a reduction in the flow rate *Q*. As soon as the system returns to normal characteristic IK, the flow rate increases (since Δ*H* is positive) and the point of operation moves back to J.

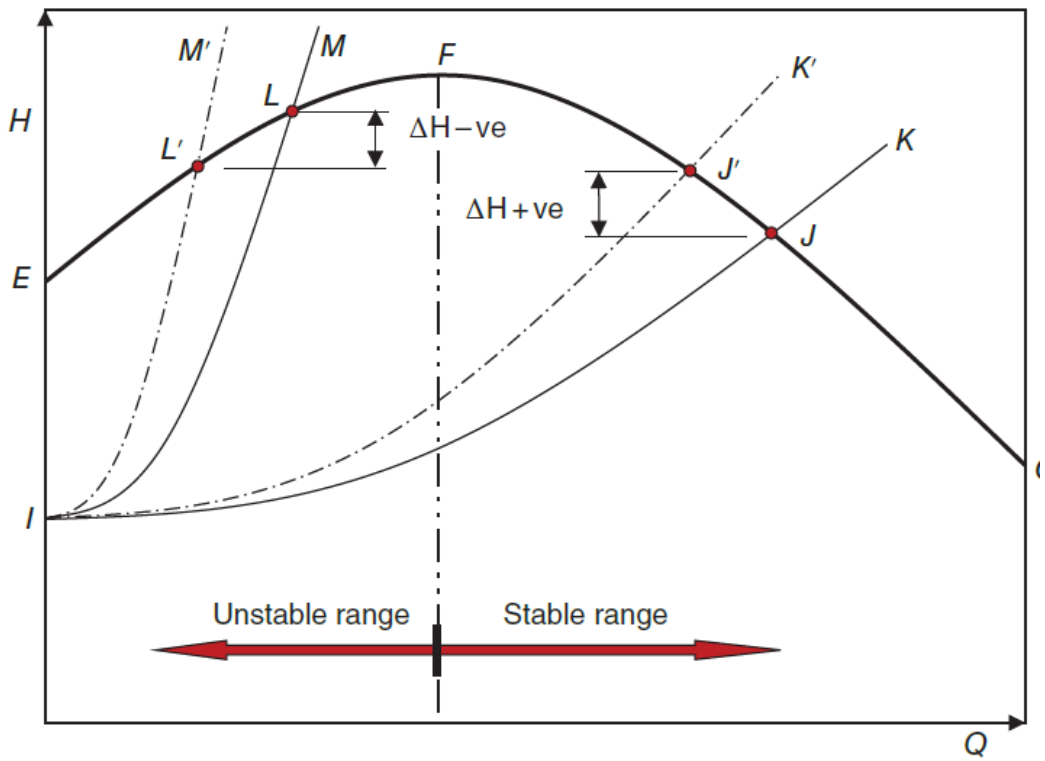

Case 2

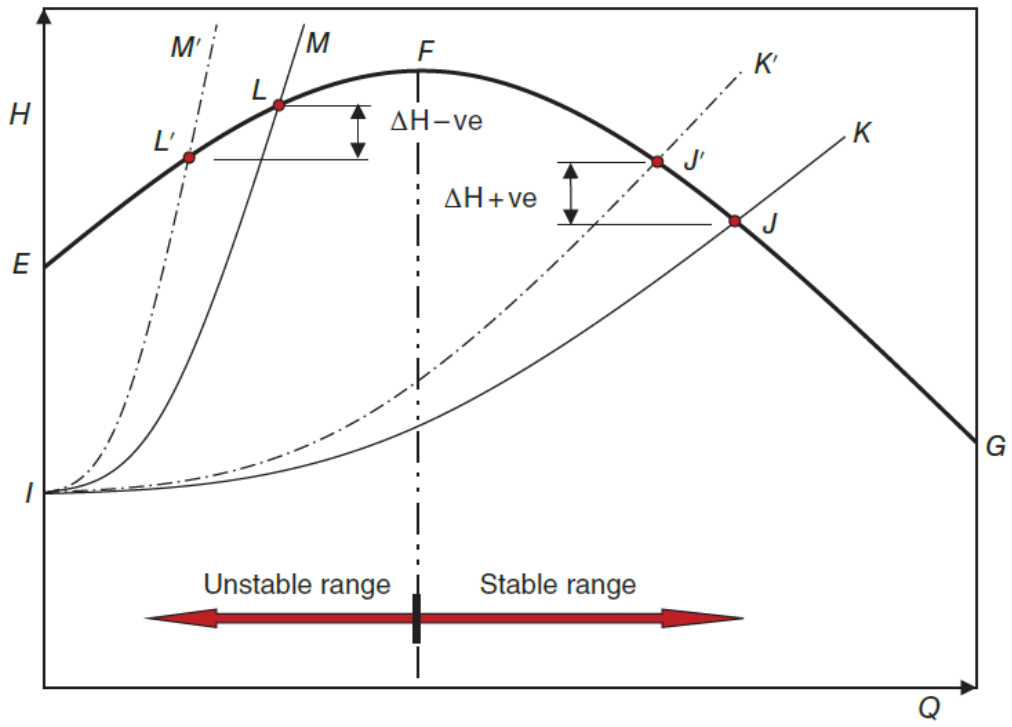

- Let us now suppose that the system curve is ILM, and the point of normal operation is L. A similar unsteadiness will cause the system curve to change to A'L'M'. The pump response is now a reduction of *Q* and *H* (Δ*H* is now negative). This results in having the head developed by the pump less than the delivery pressure which causes the flow rate to decrease further. The process continues until reaching point E, and the non-return valve closes to prevent reverse flow. Now the back pressure clears off and the difference between *HE* and *HI* causes the flow rate to increase again and the process to be repeated.

How to prevent Compressor Surge?

- In order to protect the compressor against surge, a minimum flow rate must be maintained so that the point of operation continues to be on the right side of the surge line.
- The commonly used method is recycling part of the discharge through a controlled bypass.
- When the flow rate reaches the set value *m*• *C*, the flow controller (FC) actuates the bypass control valve to circulate part of the discharge back to the compressor suction side. That leads to a reduction in the discharge pressure, resulting in an increase in the flow rate.
- Other methods are used such as variable speed drivers and using inlet guide vanes.

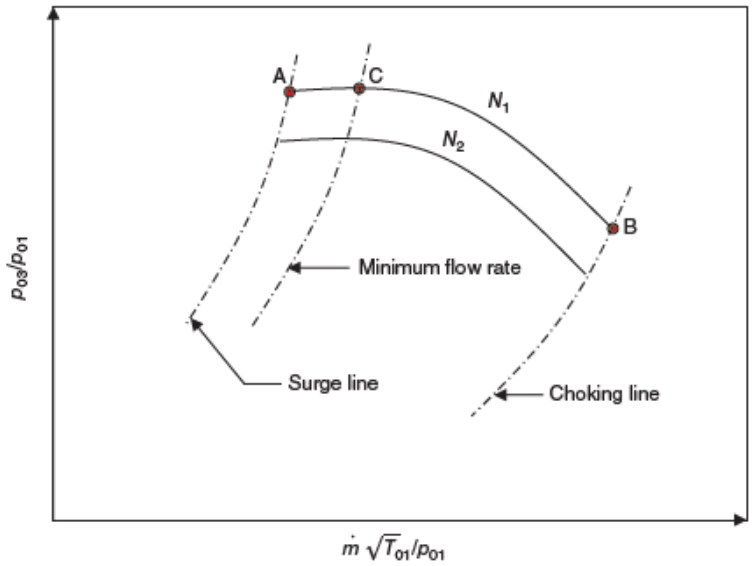

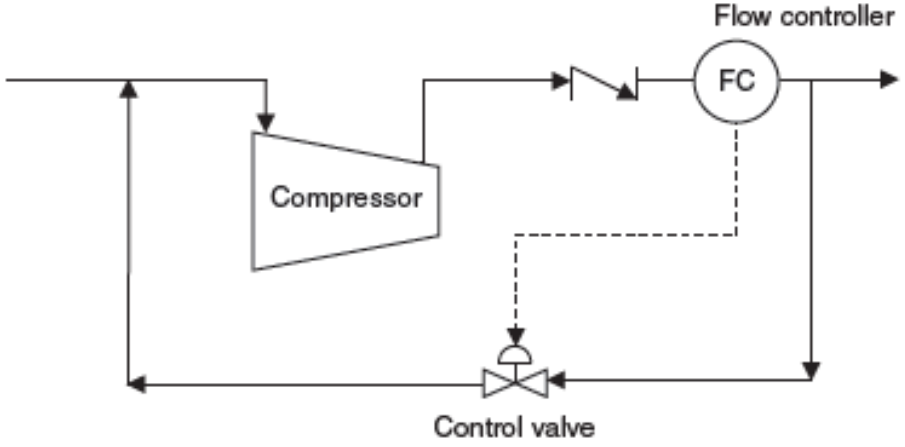

Figure 8.32 Typical Surge control system using a bypass

Choke Phenomena (stonewalling)

- Choking occurs when the compressor is operating at low discharge pressure and very high flowrates. These high flowrates at compressor choke point are the max. that the compressor can push through. Any further decrease in the outlet resistance will not lead to increase in compressor output.
- The efficiency and the head will go down after the choking line.
- Prolonged operation of a compressor at its choke point can lead to damaging the compressor parts.

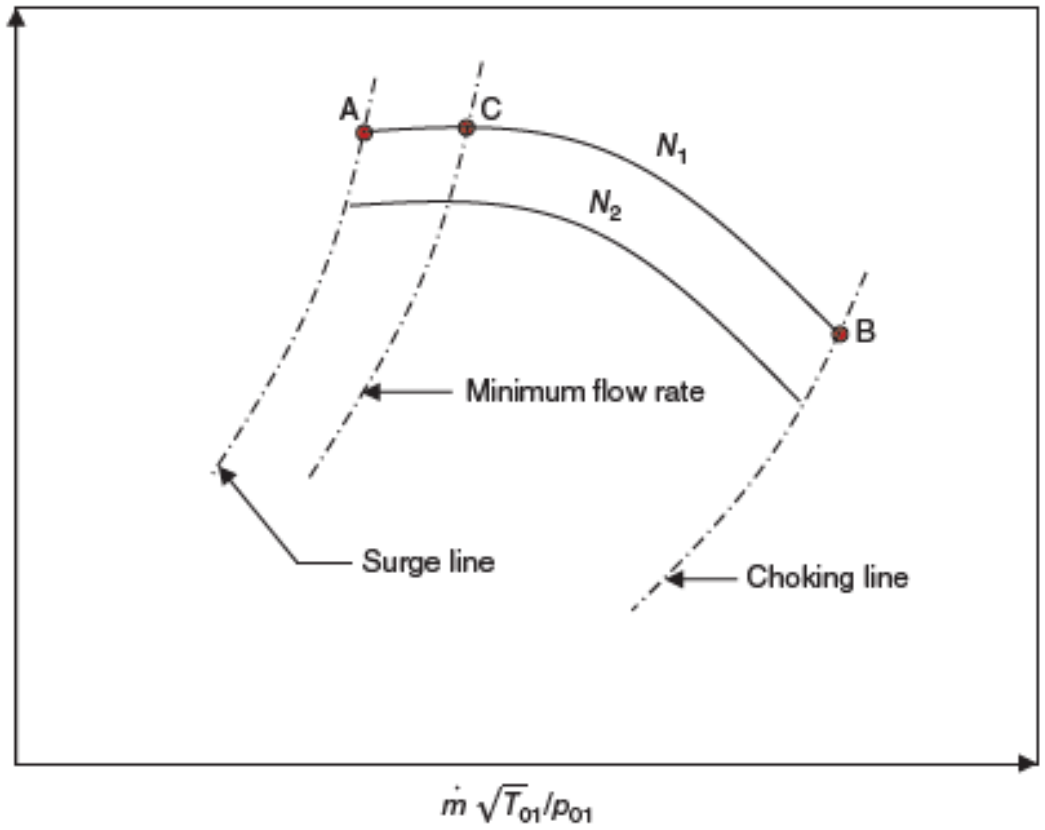

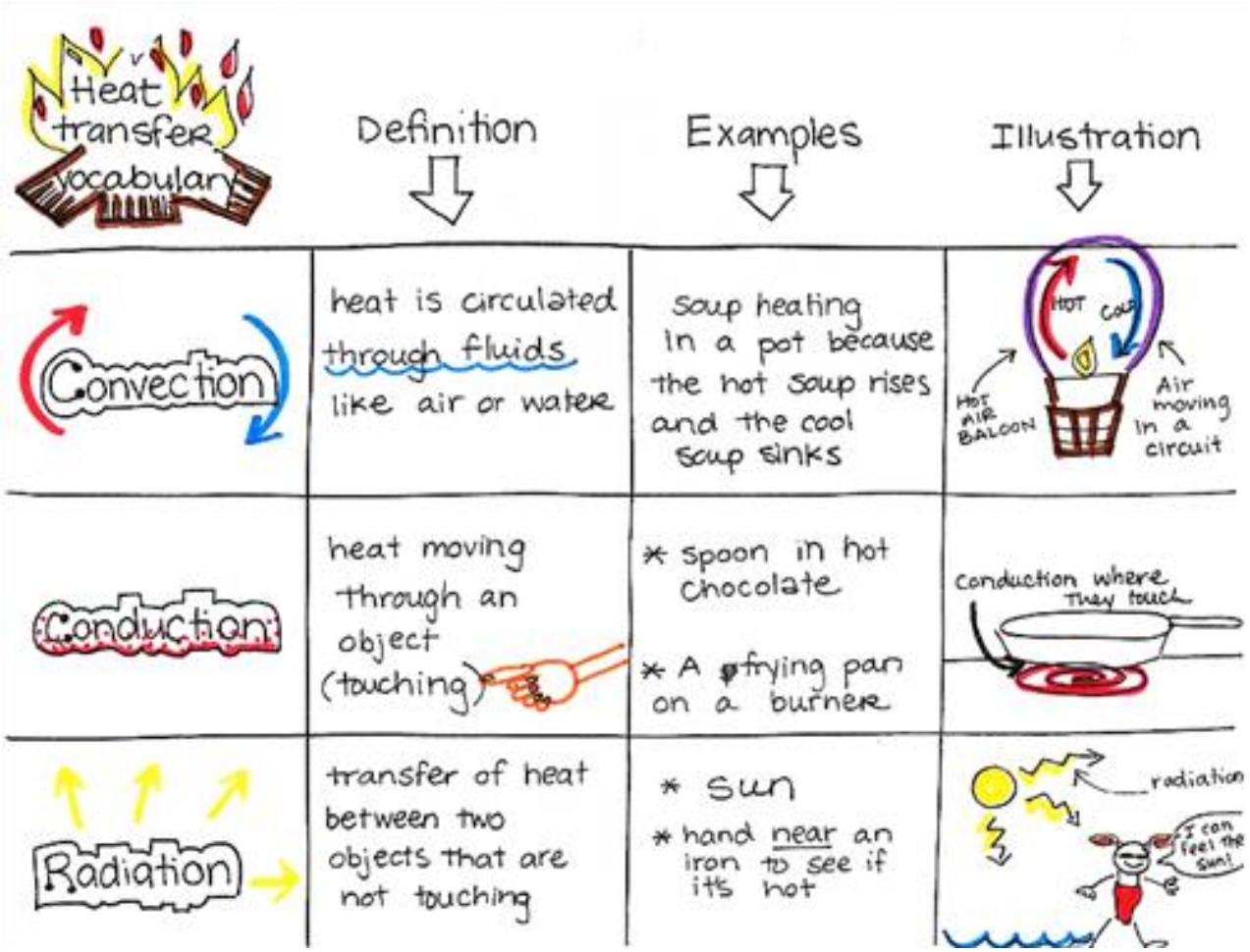

Heat Transfer

What is conduction?

- Conduction is the energy transfer from the **more energetic** to the **less energetic** particles of a substance due to **interactions between the particles**.
- Conduction happens in all phases (gas, liquid, solid).
- At steady state, the rate of heat transfer depends on
  - The type of the material.
  - The temperature difference.

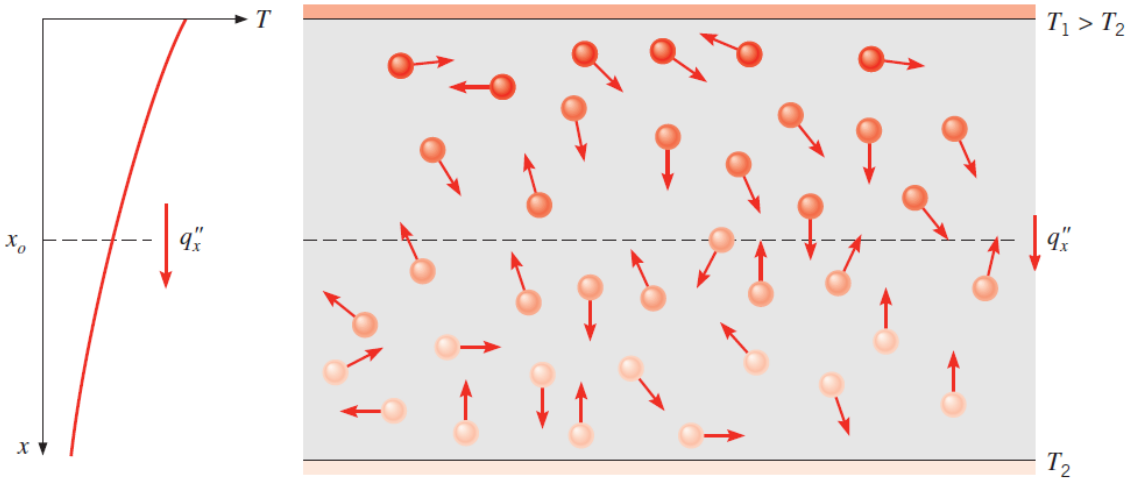

FIGURE 1.2 Association of conduction heat transfer with diffusion of energy due to molecular activity.

What is conduction?

- In solids, conduction may be attributed to atomic activity in the form of **lattice vibrations**.
- Example of conduction heat transfer: The exposed end of a metal spoon suddenly immersed in a cup of hot coffee is eventually warmed due to the conduction of energy through the spoon.

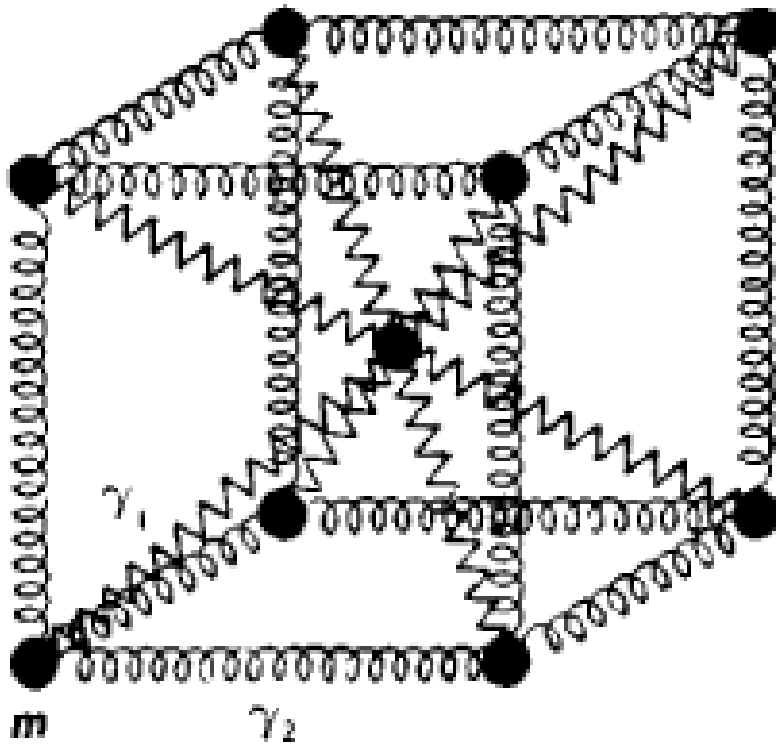

What is the conduction equation?

Fourier's law

- k is the thermal conductivity
- The minus sign tells that heat flows from regions of higher to lower temperature.

$$\dot{q}_x = -\frac{A}{\frac{x_2 - x_1}{k_A} + \frac{x_3 - x_2}{k_B}}(T_3 - T_1)$$

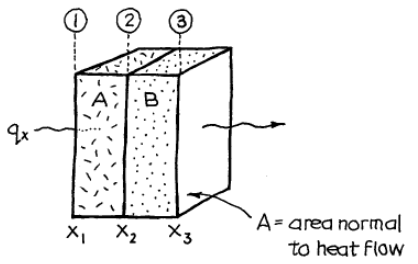

$$\dot{q}_x = -kA\frac{dT}{dx} \qquad \left[\frac{\mathrm{J}}{\mathrm{s}} = \mathrm{W}\right]$$

Define the thermal conductivity and what are the factors that affect it?

- The thermal conductivity of a material is a measure of its ability to conduct heat.
- Heat transfer occurs at a lower rate in materials of low thermal conductivity than in materials of high thermal conductivity.
- Influencing factors
  - Temperature
  - Chemical phase

Table 9.1 Short table of thermal conductivities for materials at room temperature[a]

Material	k, W/m K	Material	k, W/m K
Gases		Solids	
SO_2	0.009	Styrofoam	0.036
CO_2, H_2	0.018	Corrugated cardboard	0.064
H_2O	0.025	Paper	0.13
Air	0.026	Sand, dry	0.33
Liquids		Glass	0.35–1.3
Gasoline	0.13	Ice	2.2
Ethanol	0.18	Lead	34
Water	0.61	Steel	45
Mercury	8.4	Aluminum	204
Sodium	85	Copper	380

The thermal conductivity

What is convection?

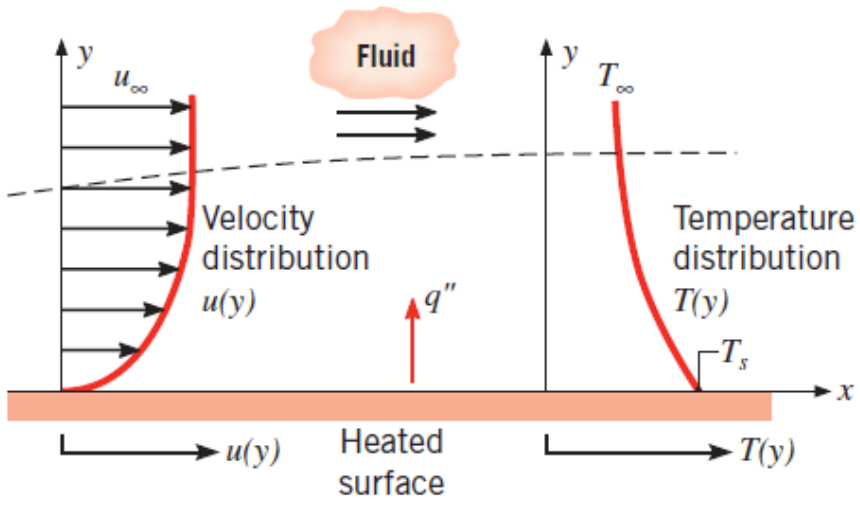

- Convection refers to heat transfer that will occur between a **surface** and a **moving fluid** when the two are at different temperatures.
- When a fluid is heated and then travels away from the source, it carries the thermal energy along.
- This heat transfer is due to the combined effects of **conduction** and **bulk fluid motion**.
- The contribution due to **conduction** dominates near the surface where the fluid velocity is low.

What is convection equation?

$$q'' = h(T_\infty - T_s)$$

Newton's Law of Cooling

- h (W/m2.K): the convection heat transfer coefficient, which is a function of:
  1. Fluid velocity.
  2. Flow viscosity.
  3. Fluid density.
  4. Fluid thermal conductivity.

TABLE 1.1 Typical values of the convection heat transfer coefficient

Process	h (W/m^2 · K)
Free convection	
Gases	2–25
Liquids	50–1000
Forced convection	
Gases	25–250
Liquids	100–20,000
Convection with phase change	
Boiling or condensation	2500–100,000

What are the convection types?

1- Forced Convection

- We speak of forced convection when the flow is caused by external means, such as by a fan, a pump, or atmospheric winds.

What are the convection types?

2- Free/Natural Convection

- For free convection, the flow is induced by buoyancy forces, which are due to density differences caused by temperature variations in the fluid.
- Free convection distributes the poisonous products of combustion during fires.

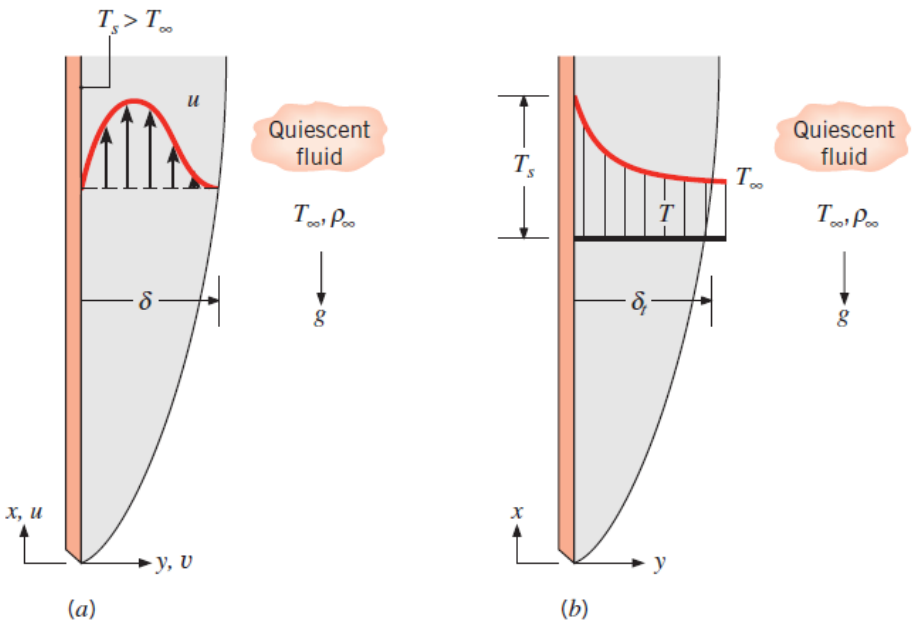

FIGURE 9.3 Boundary layer development on a heated vertical plate: (a) Velocity boundary layer. (b) Thermal boundary layer.

Draw the **velocity** distribution of external flow on the plate

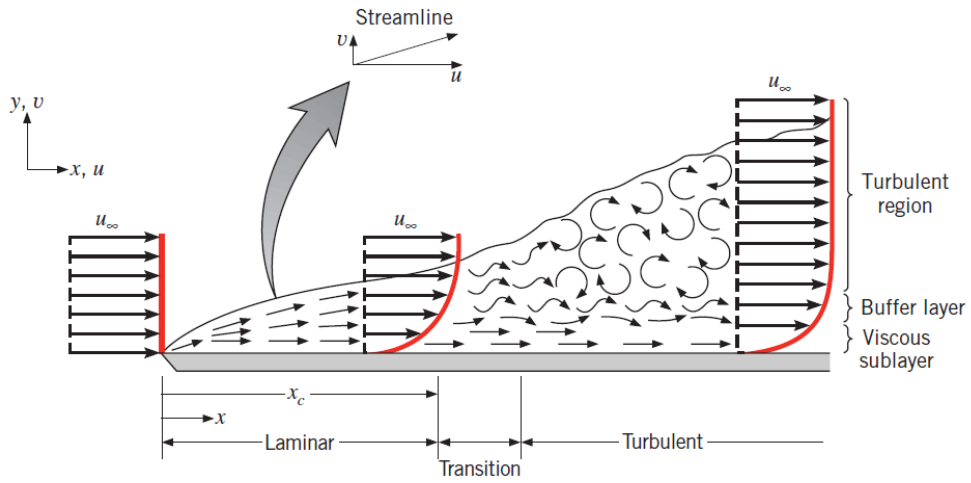

FIGURE 6.6 Velocity boundary layer development on a flat plate.

- A consequence of the fluid–surface interaction is the development of a region in the fluid through which the velocity varies from zero at the surface to a finite value u∞ associated with the flow.
- This region of the fluid is known as the velocity, boundary layer.
- When fluid particles make contact with the surface, their velocity is reduced significantly relative to the fluid velocity upstream of the plate due to **shear stresses** acting in planes.
- These particles then act to retard the motion of particles in the adjoining fluid layer, which act to retard the motion of particles in the next layer, and so on until, at a distance y = S from the surface, the effect becomes negligible.

Draw **Thermal** boundary layer development on an isothermal flat plate.

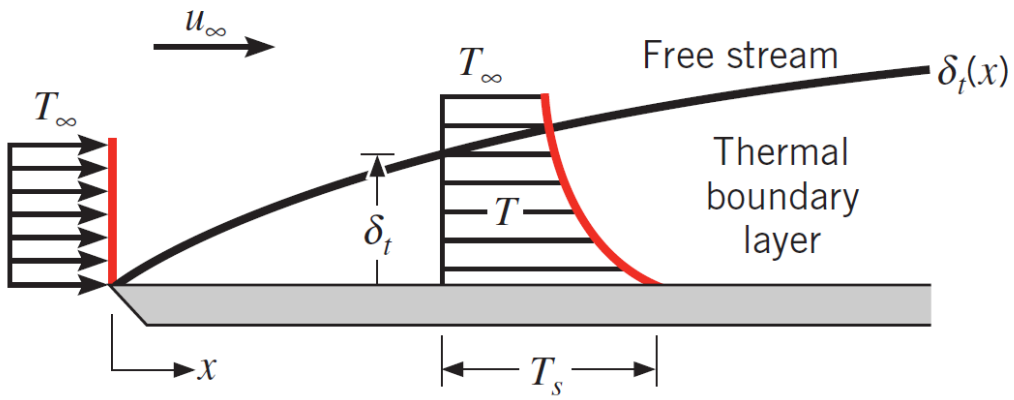

- If the surface and flow temperatures differ, there will be a region of the fluid through which the temperature varies from Ts at y = 0 to T∞ in the outer flow.
- This region, called the **thermal boundary layer.**

Draw the **velocity & Thermal** distribution of internal flow in pipes

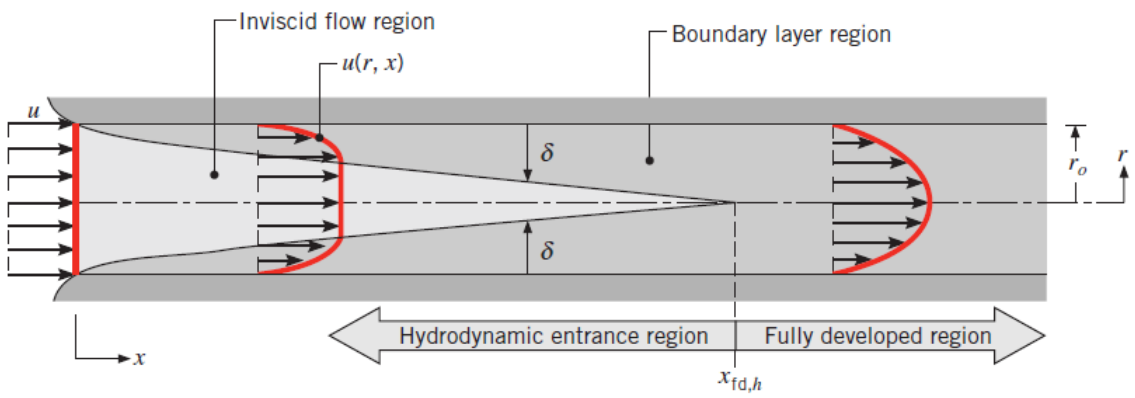

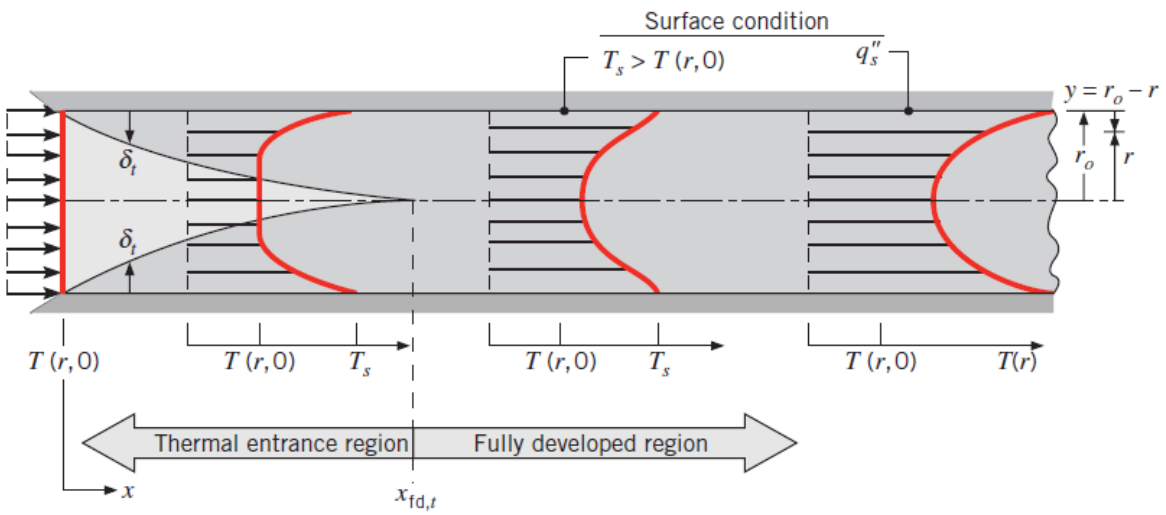

FIGURE 8.4 Thermal boundary layer development in a heated circular tube.

What is Thermal Radiation?

- Thermal radiation is the emission of electromagnetic waves from all matter that has a temperature that is greater than absolute zero. That means the object has a thermal energy.
- Thermal energy consists of the kinetic energy of random movements of atoms and molecules in matter.
- These atoms and molecules are composed of charged particles (protons and electrons), and kinetic interactions among matter particles result in charge acceleration.
- If the charge accelerates, it accelerates the electric field and the magnetic field then changes. These changing fields then “combine” with each other to produce electromagnetic radiation.

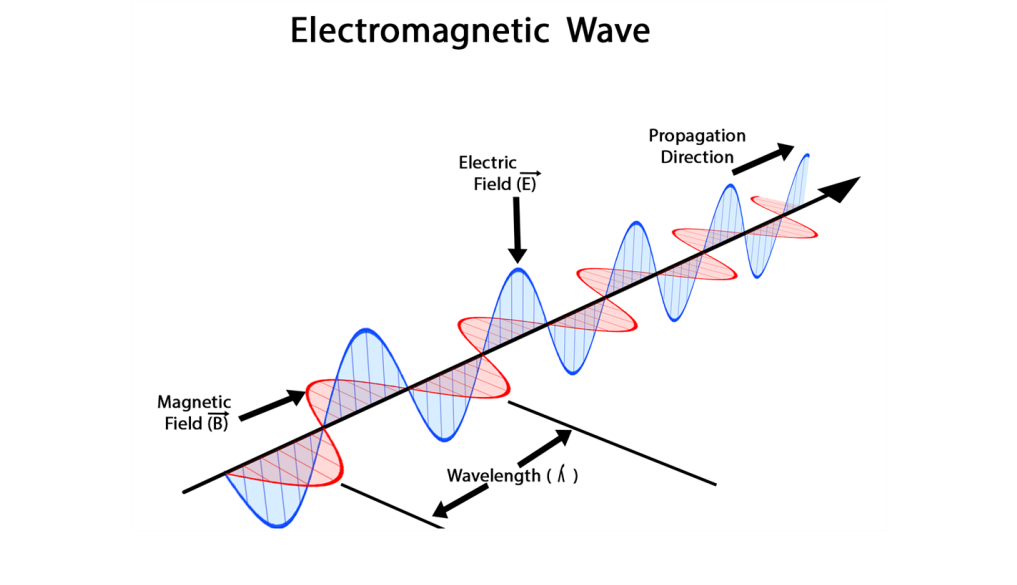

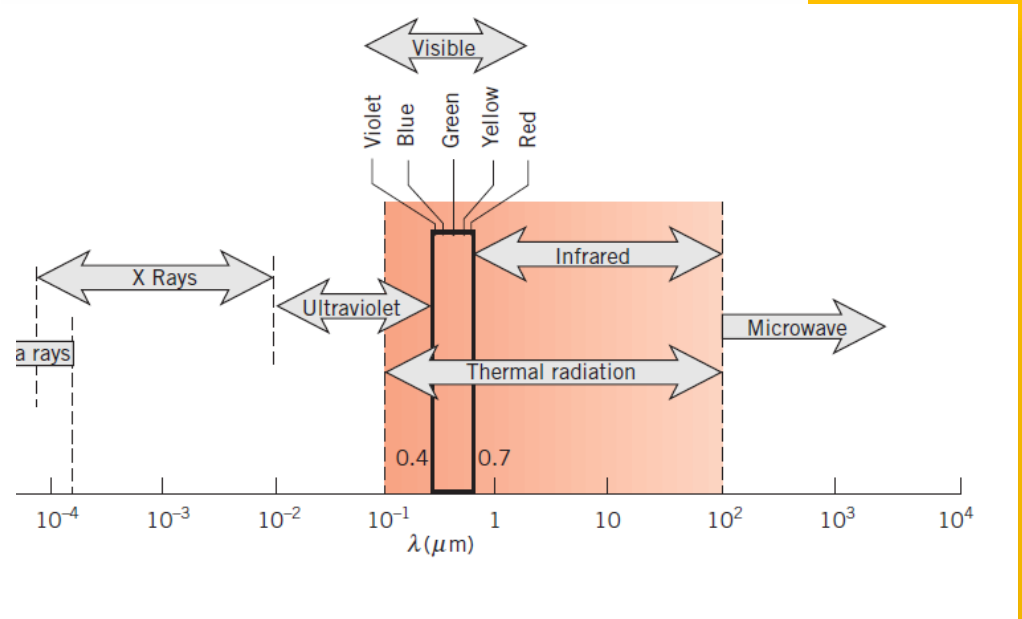

What is Thermal Radiation?

- The transfer of energy by radiation does not require the presence of a material medium. In fact, radiation transfer occurs most efficiently in a vacuum.
- At this moment thermal radiation is being emitted by all the matter that surrounds you: by the furniture and walls of the room, if you are indoors, or by the ground, buildings, and the atmosphere and sun if you are outdoors.

$$q''(\mathrm{W/m^2}) = \varepsilon\sigma(T_s^4 - T_{\mathrm{sur}}^4)$$

What are the differences between thermodynamic and heat transfer?

- Thermodynamic tells us:
  - How much heat is transferred?
- Heat transfer tells us :
  - How (with what mode) heat is transferred?
  - At what rate heat is transferred?
- Example is the cup of water.
  - In thermodynamics, we can calculate the heat released when we let the cup cool from 100c to 25c by using the 1st law of thermodynamics.
  - In heat transfer, we can calculate the required thickness of the cup if the client ask to reach that temperature after 2 hours.

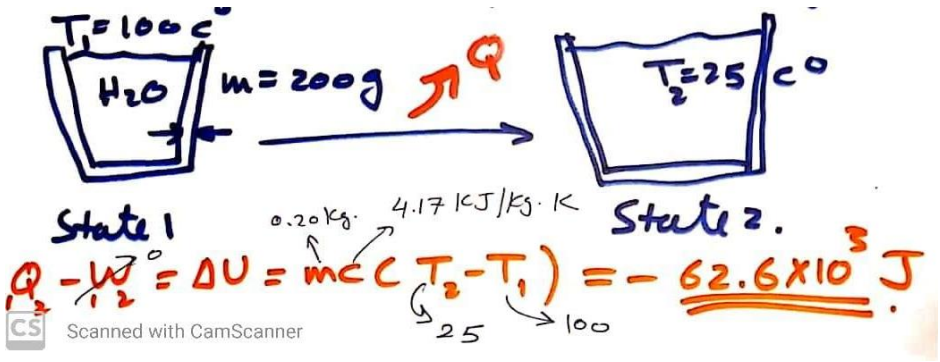

Heat Exchanger

What is heat exchanger?

- A heat exchanger is a system used to transfer heat between two or more fluids.
- Heat exchangers are used in both cooling and heating processes.

Flow arrangement (double-pipe heat exchanger)

In the **parallel-flow arrangement**, the hot and cold fluids enter at the same end, flow in the same direction, and leave at the same end.

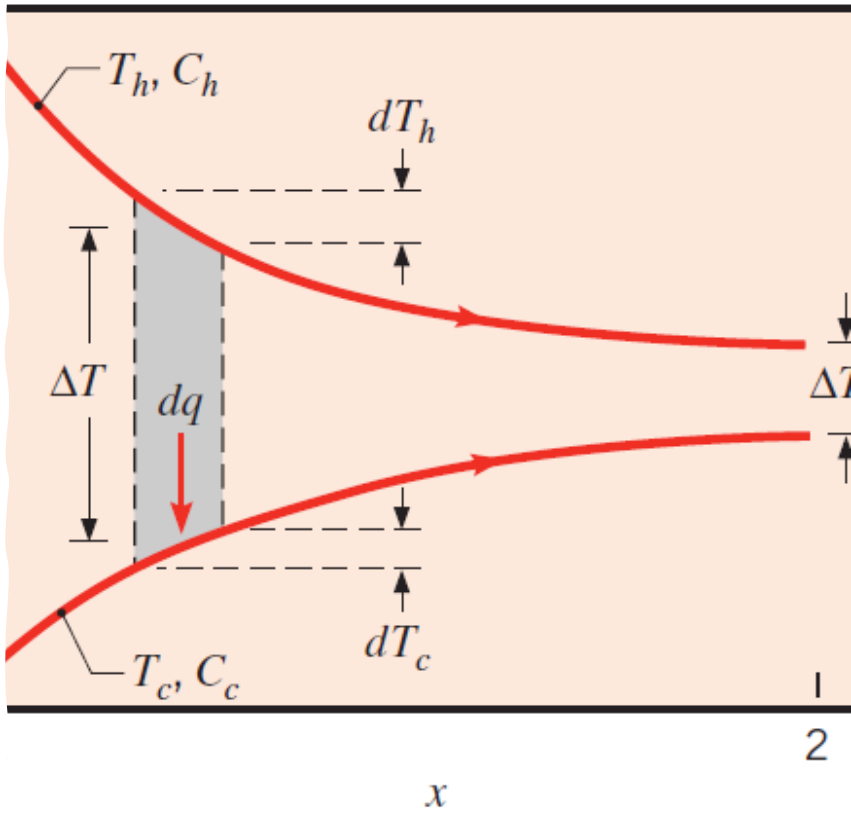

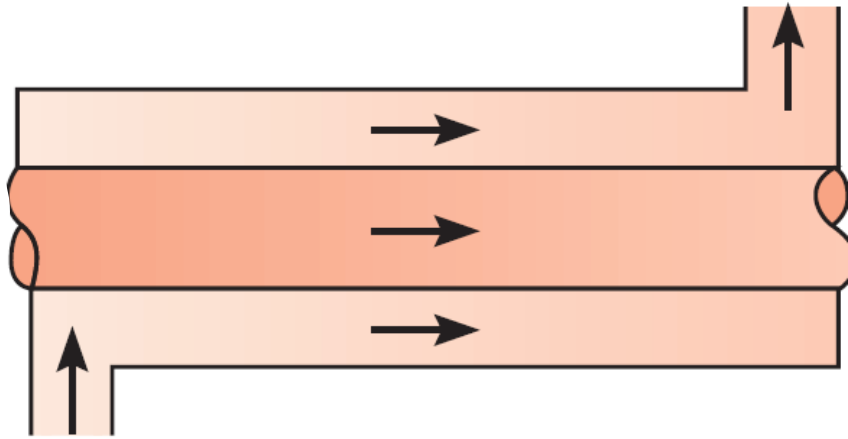

Flow arrangement (double-pipe heat exchanger)

- In the **counterflow arrangement**, the fluids enter at opposite ends, flow in opposite directions, and leave at opposite ends.

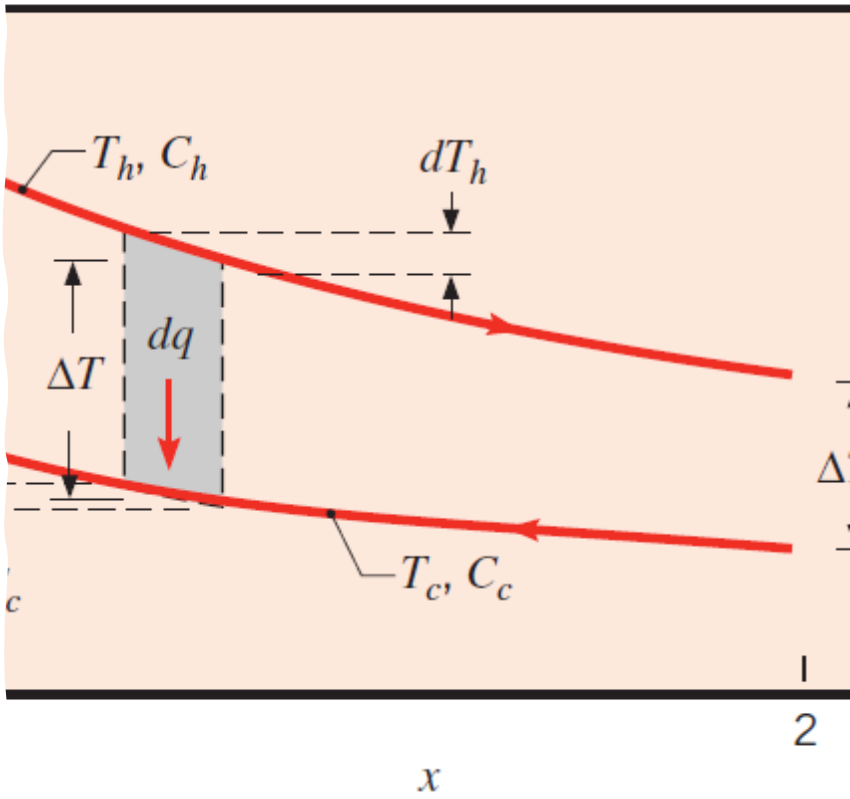

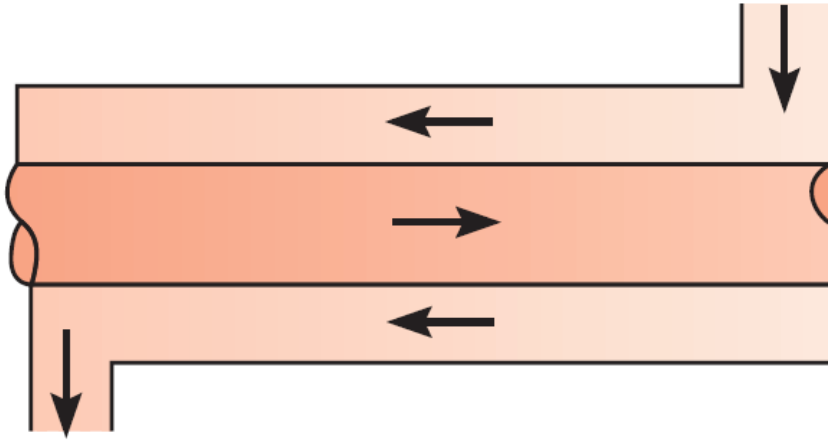

Flow arrangement (Cross Flow heat exchanger)

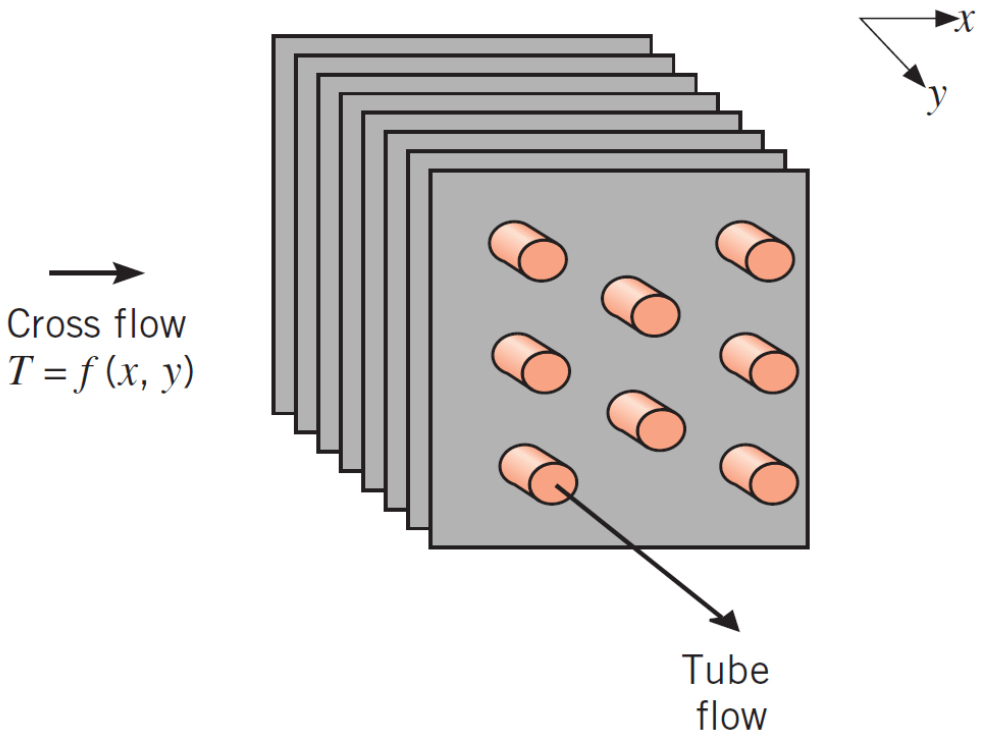

- The cross-flowing fluid is said to be **unmixed** because the fins inhibit motion in a direction (y) that is transverse to the main-flow direction (x).
- For the un-finned tube bundle, fluid motion, hence mixing, in the transverse direction is possible.

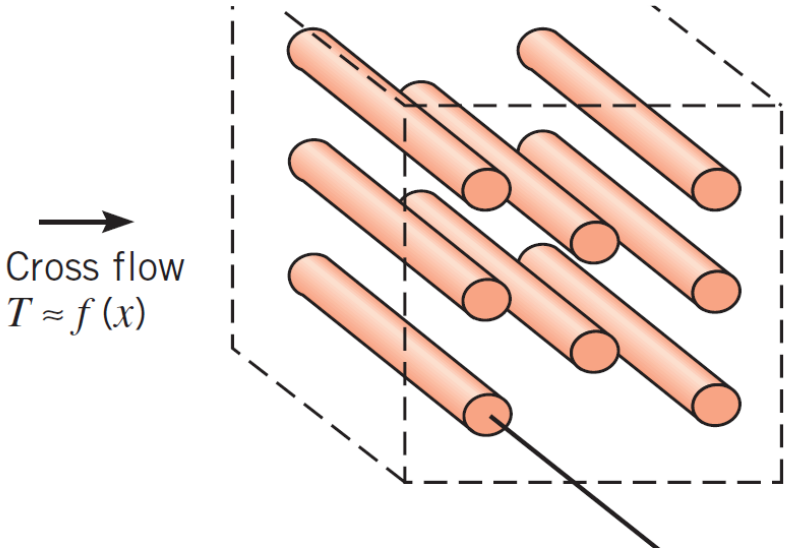

Types

Which type of HEX is the most common type?

- **Shell and tube heat exchanger**

Shell and tube heat exchanger

- They are typically used for high-pressure applications, because they are robust due to their shape.
- Advantages:
  - Less expensive as compared to Plate type coolers
  - Can be used in systems with higher operating temperatures and pressures.
- Disadvantages:
  - Cleaning of tubes is difficult, and fouling is always an issue
  - Requires more space.

Flow arrangement (shell-and-tube heat exchanger)

Specific forms differ according to the number of shell-and-tube passes:

- The simplest form involves single tube and shell passes.
- Heat exchanger with one shell pass and two tube passes.
- Heat exchanger with two shell passes and four tube passes.

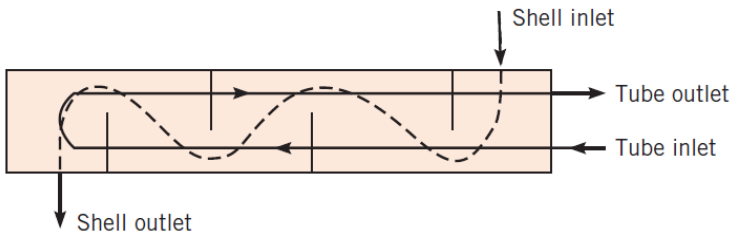

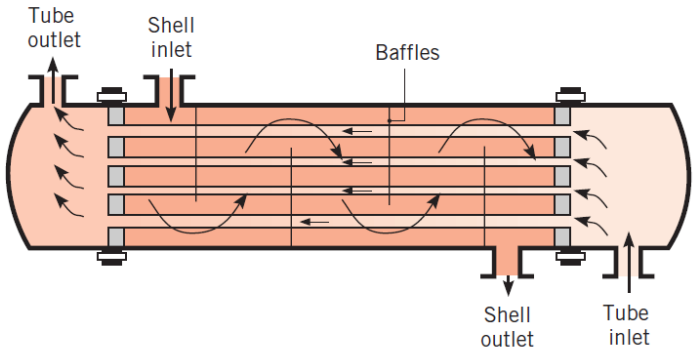

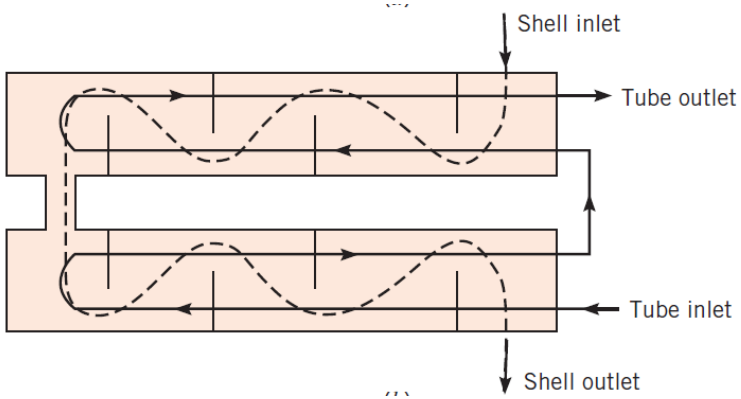

Tube Groups for Two-Pass Design

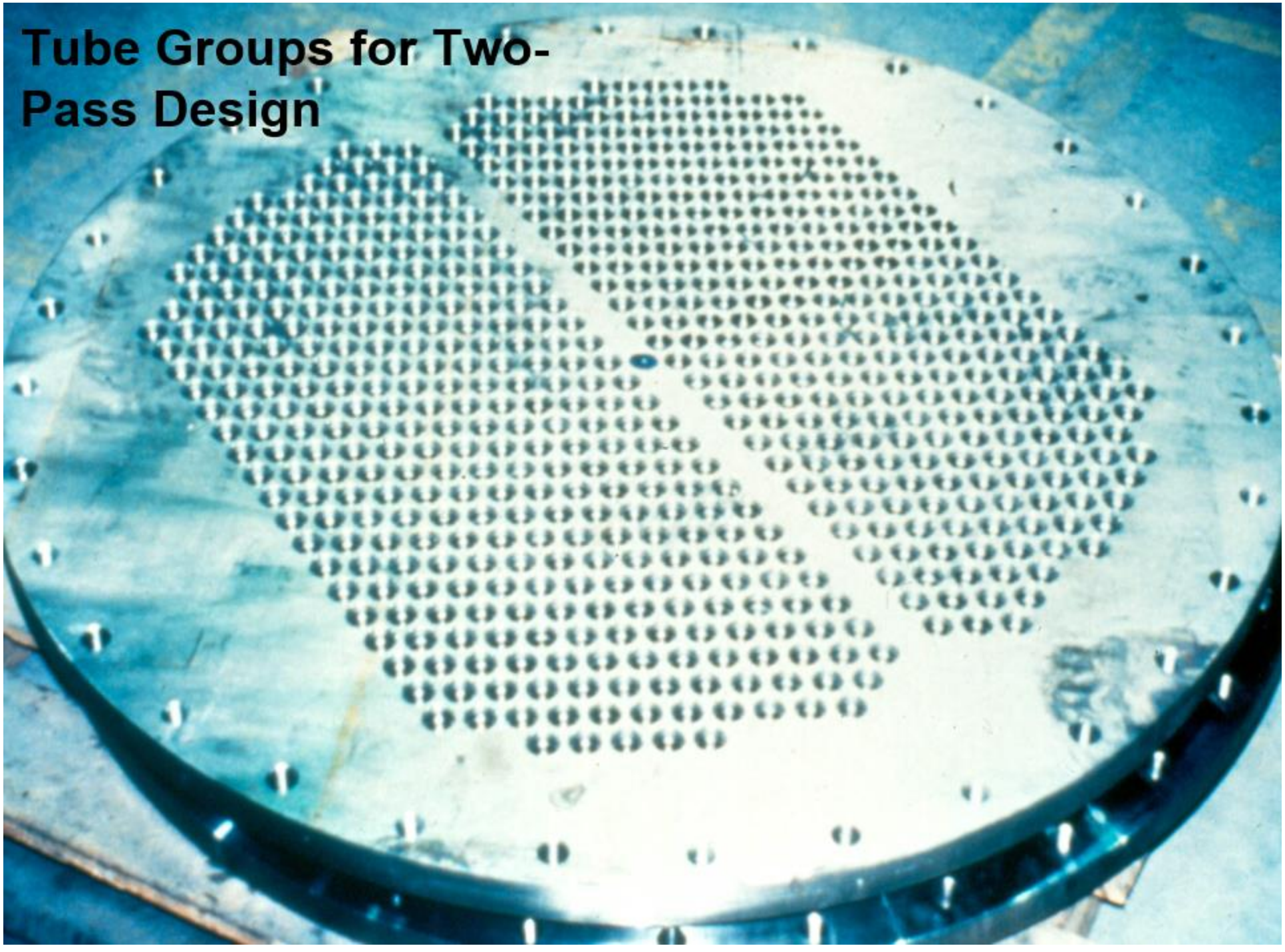

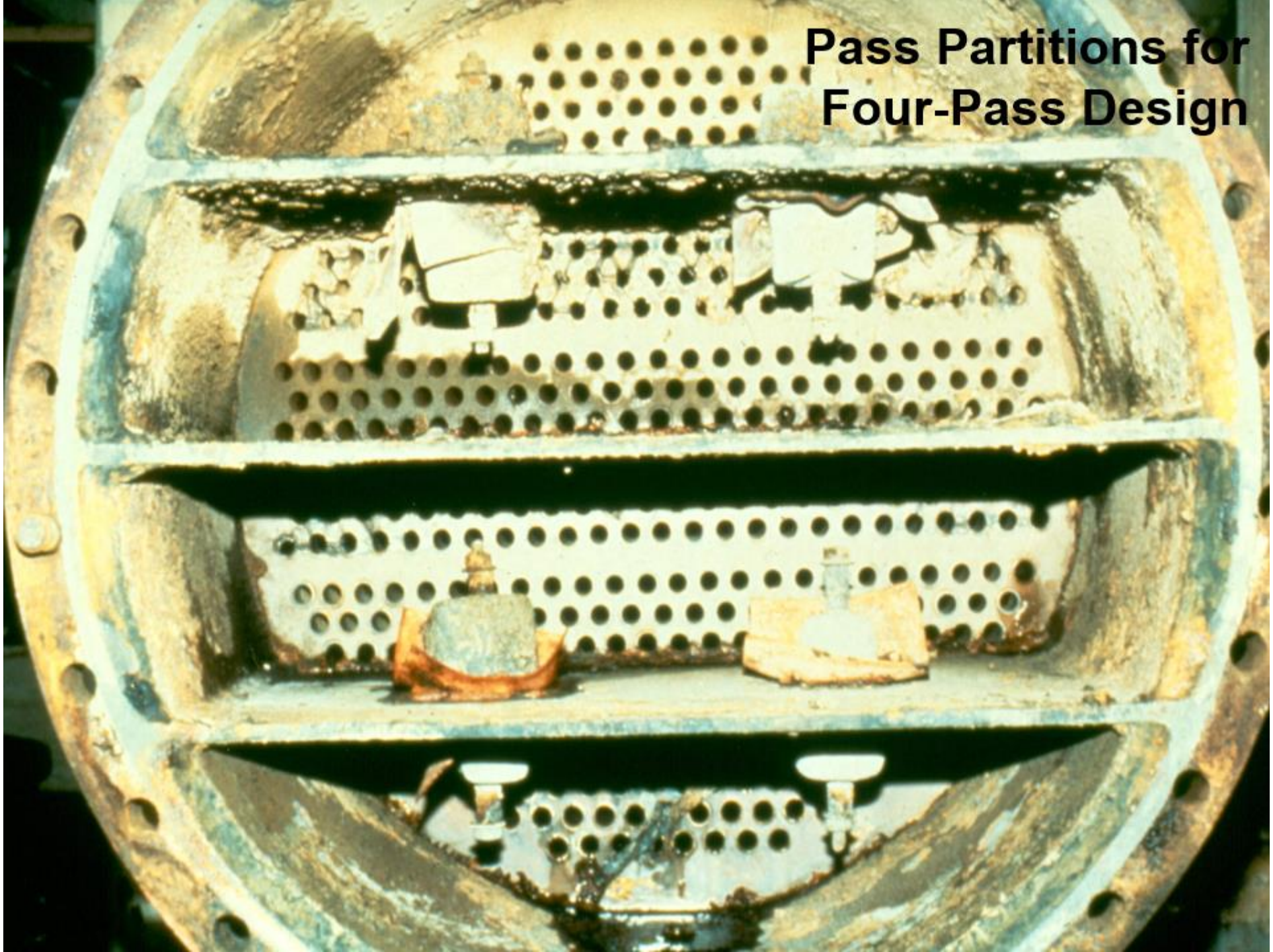
Pass Partitions for
Four-Pass Design

shell-and-tube Major Components

TABLE N-2

1. Stationary Head-Channel
2. Stationary Head-Bonnet
3. Stationary Head Flange-Channel or Bonnet
4. Channel Cover
5. Stationary Head Nozzle
6. Stationary Tubesheet
7. Tubes
8. Shell
9. Shell Cover
10. Shell Flange-Stationary Head End
11. Shell Flange-Rear Head End
12. Shell Nozzle
13. Shell Cover Flange
14. Expansion Joint
15. Floating Tubesheet
16. Floating Head Cover
17. Floating Head Cover Flange
18. Floating Head Backing Device
19. Split Shear Ring
20. Slip-on Backing Flange
21. Floating Head Cover-External
22. Floating Tubesheet Skirt
23. Packing Box
24. Packing
25. Packing Gland
26. Lantern Ring
27. Tierods and Spacers
28. Transverse Baffles or Support Plates
29. Impirigement Plate
30. Longitudinal Baffle
31. Pass Partition
32. Vent Connection
33. Drain Connection
34. Instrument Connection
35. Support Saddle
36. Lifting Lug
37. Support Bracket
38. Weir
39. Liquid Level Connection
40. Floating Head Support

FIGURE N-2

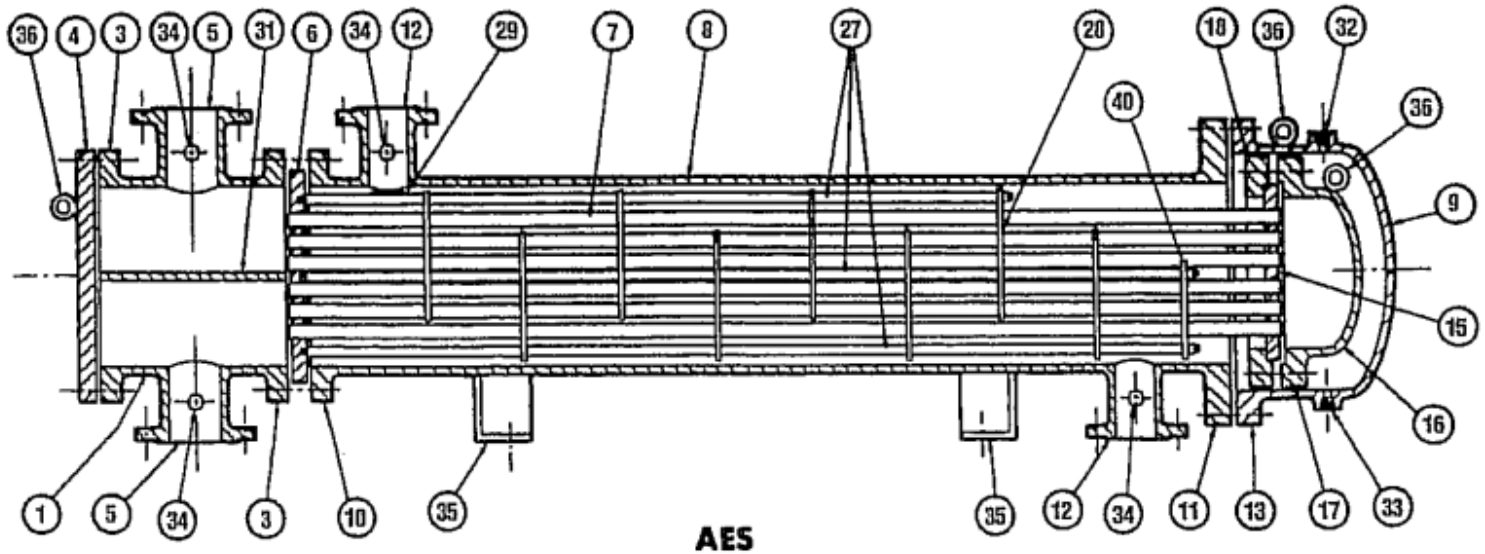

Baffles

- **Baffles** are usually installed:
  - To increase the convection coefficient of the shell-side fluid by inducing turbulence and a cross-flow velocity component relative to the tubes.
  - To support the tubes, reducing flow-induced tube vibration.
- What is the downside?
  - more baffles will increase the shell side pressure drop

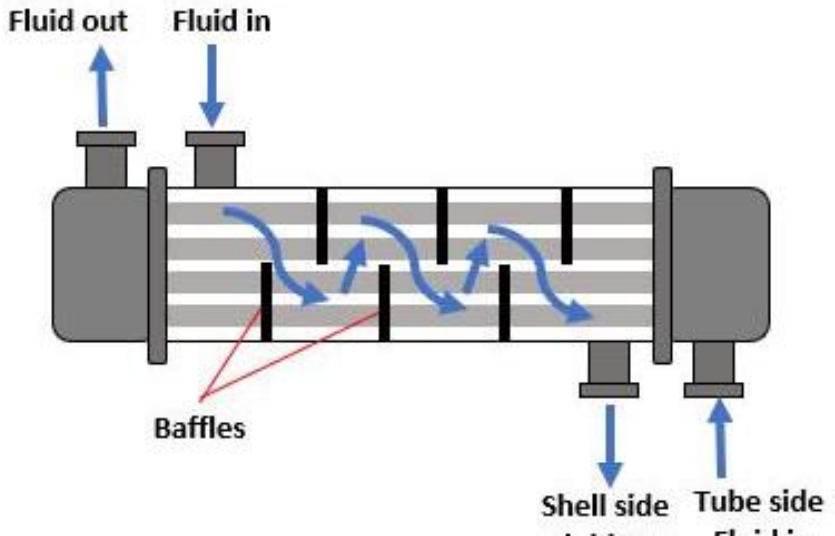

Expansion Joints

- For tubes between fixed tubesheets, the temperature and material differences between tubes and shell will cause differential thermal expansion/contraction as the temperature changes. An expansion joint located in the shell is designed to permit this thermal movement without overstressing the shell, tubes or tubesheet. Several types of expansion joints are available.

Figure 10 – Types of expansion joints

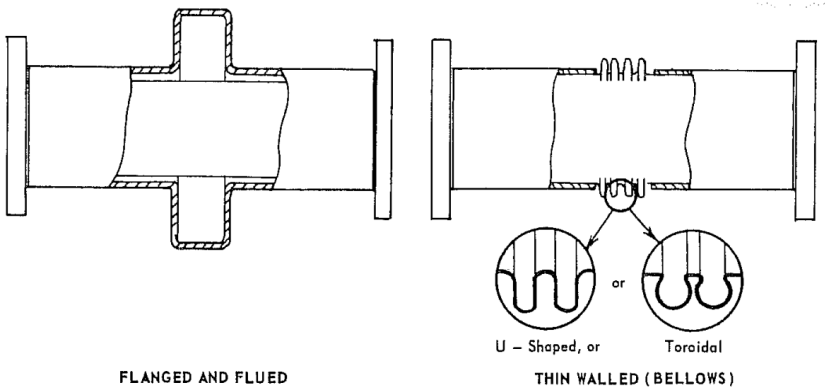

Tie Rods

- These structural rods run parallel to the exchanger tubes through the baffles and are fastened to one tubesheet. The tie rods **space and support** the baffles.

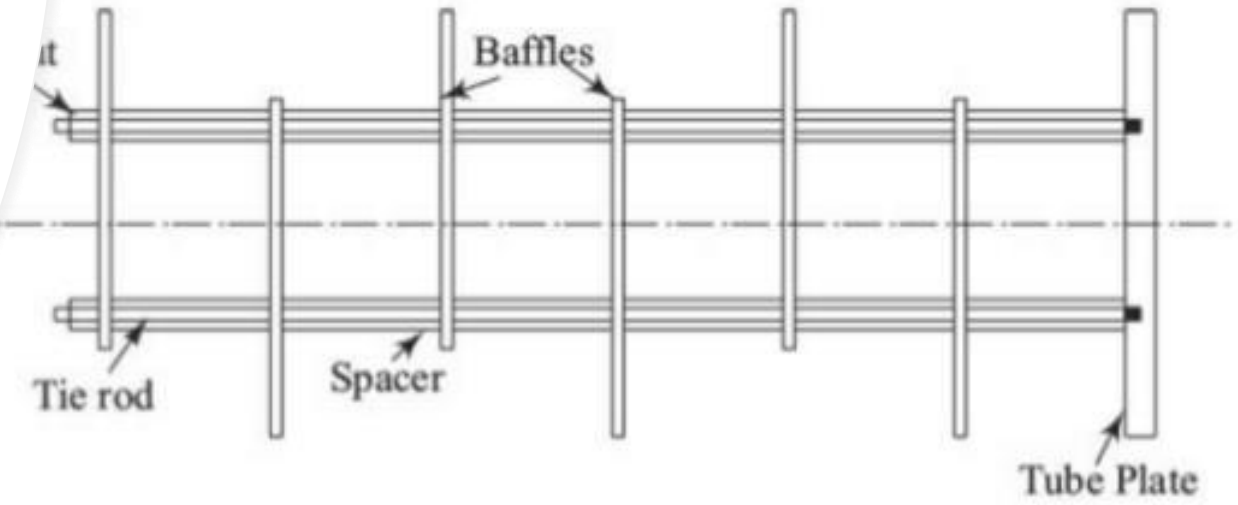

Front End Stationary Head

A. Removable Channel and Removable Cover

- Specified for two distinct reasons:
  - First, if the number of tubeside passes is large and the exchanger diameter is small, it will be impossible to weld the partition plates into a type “B” channel due to space limitations.
  - Second, if frequent tubeside cleaning is anticipated, the type “A” head allows access to the tubing without disturbing the process piping connection.
- Not specified when **mechanical cleaning** of shell side is required, since tube bundle is not removable.

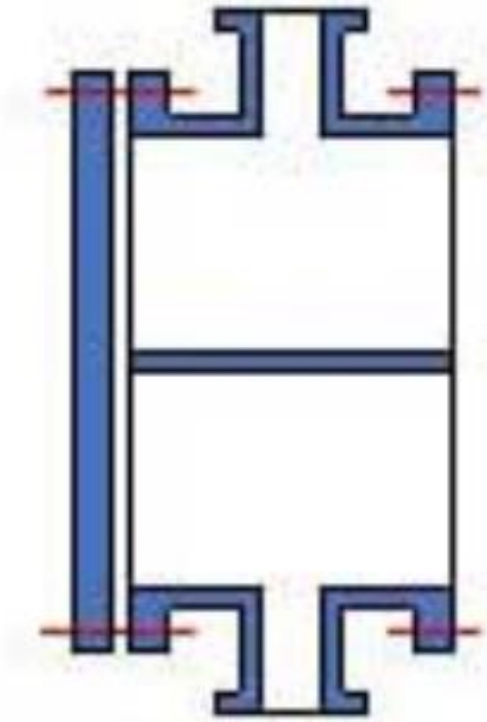

channel and removable cover

Front End Head

B. Removable Bonnet

- Commonly specified to allow access to tubesheet face for infrequent tube cleaning, and tube to tubesheet joint inspection.
- Less costly than type “A” channel, but requires some process piping disassembly prior to channel removal.
- Not recommended when frequent mechanical cleaning of tubeside is required since tube bundle is not removable.

bonnet
(integral cover)

Other types

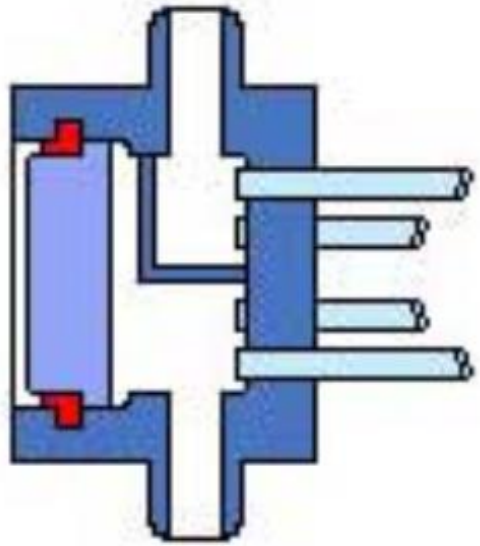

special high pressure closure

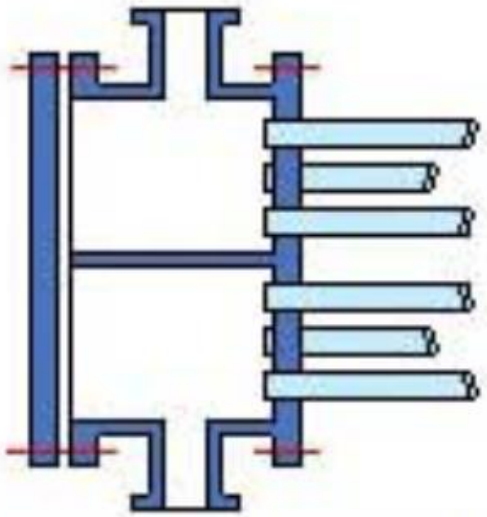

channel integral with tubesheet and removable cover

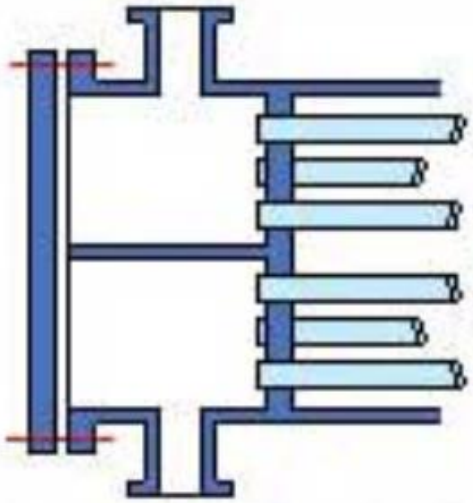

channel integral with tubesheet and removable cover

Shell

one pass shell

two pass shell
with longitudinal baffle

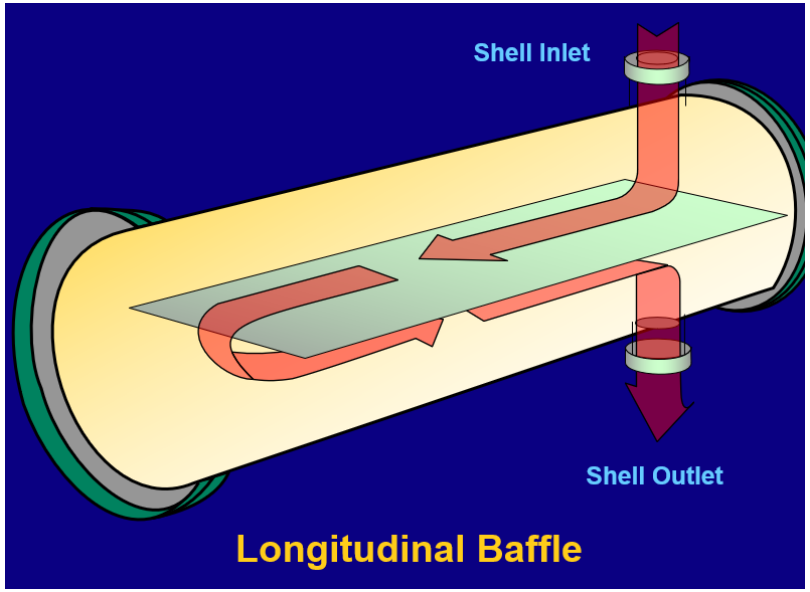

Shell

K. Kettle Type Shell

- TEMA refers to this as a “kettle type reboiler”, but its application is more varied.
- The kettle configuration is also commonly used for vaporizing a process fluid and for generating steam using “waste process heat”.

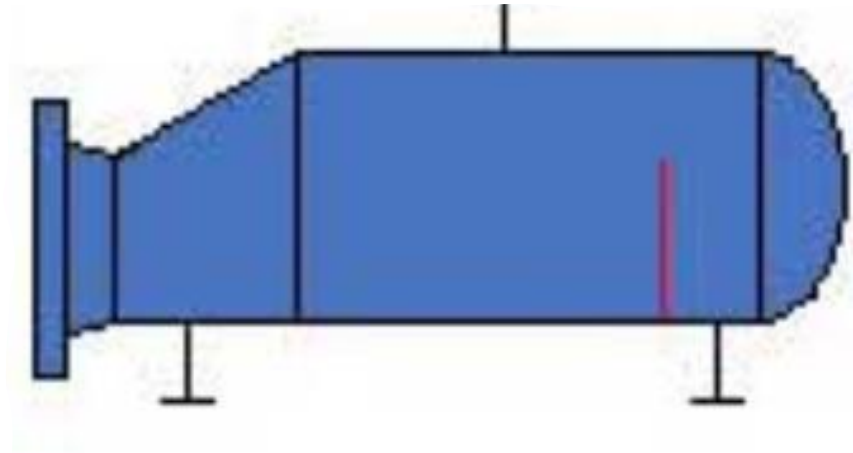

Rear End Head

S. Floating Head with Backing Device

- This type of construction is extremely common in **refineries**, the most common configuration being TEMA AES. The bundle is removable for shellside cleaning, covers are removable for tubeside cleaning, shell expansion joint is not required, and single or multi-pass tubeside construction is possible.

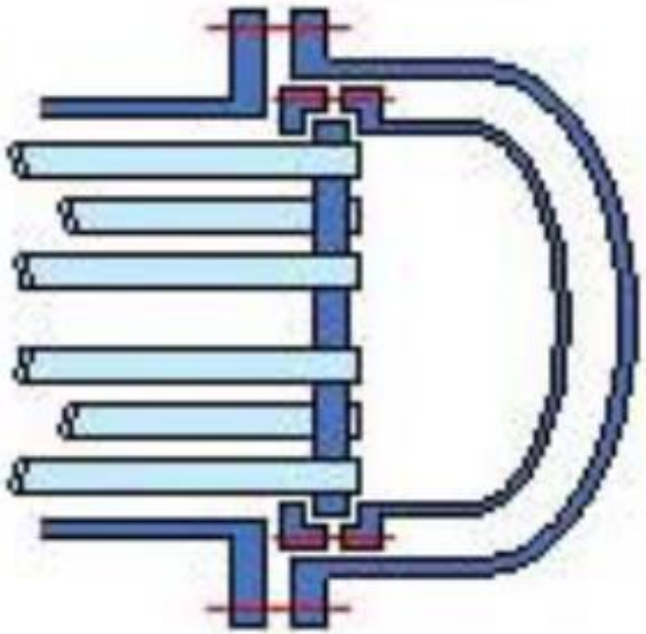

loating head with backing device (split ring)

Rear End Head

U. U Type

- All other types of shell-and-tube exchangers use straight tubes anchored at both ends by tubesheets, but the U type has bent tubes requiring only one tubesheet, which yields a removable bundle design without packing. This unit is excellent for absorbing thermal expansion of the tubes but has tubes that cannot be cleaned inside by mechanical means.

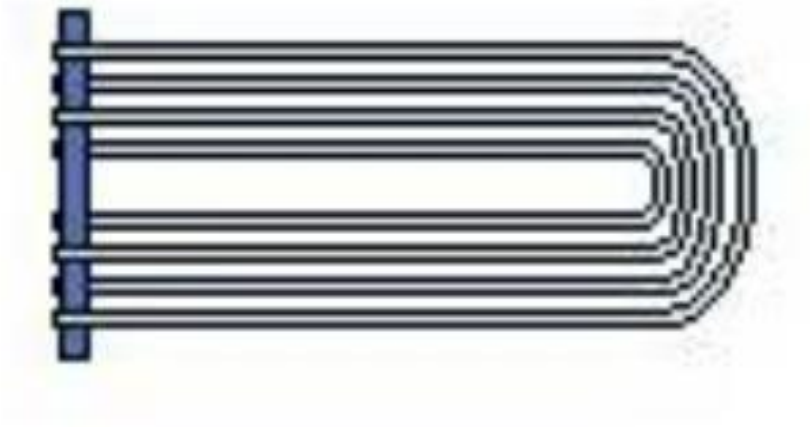

u-tube bundle

Rear End Head

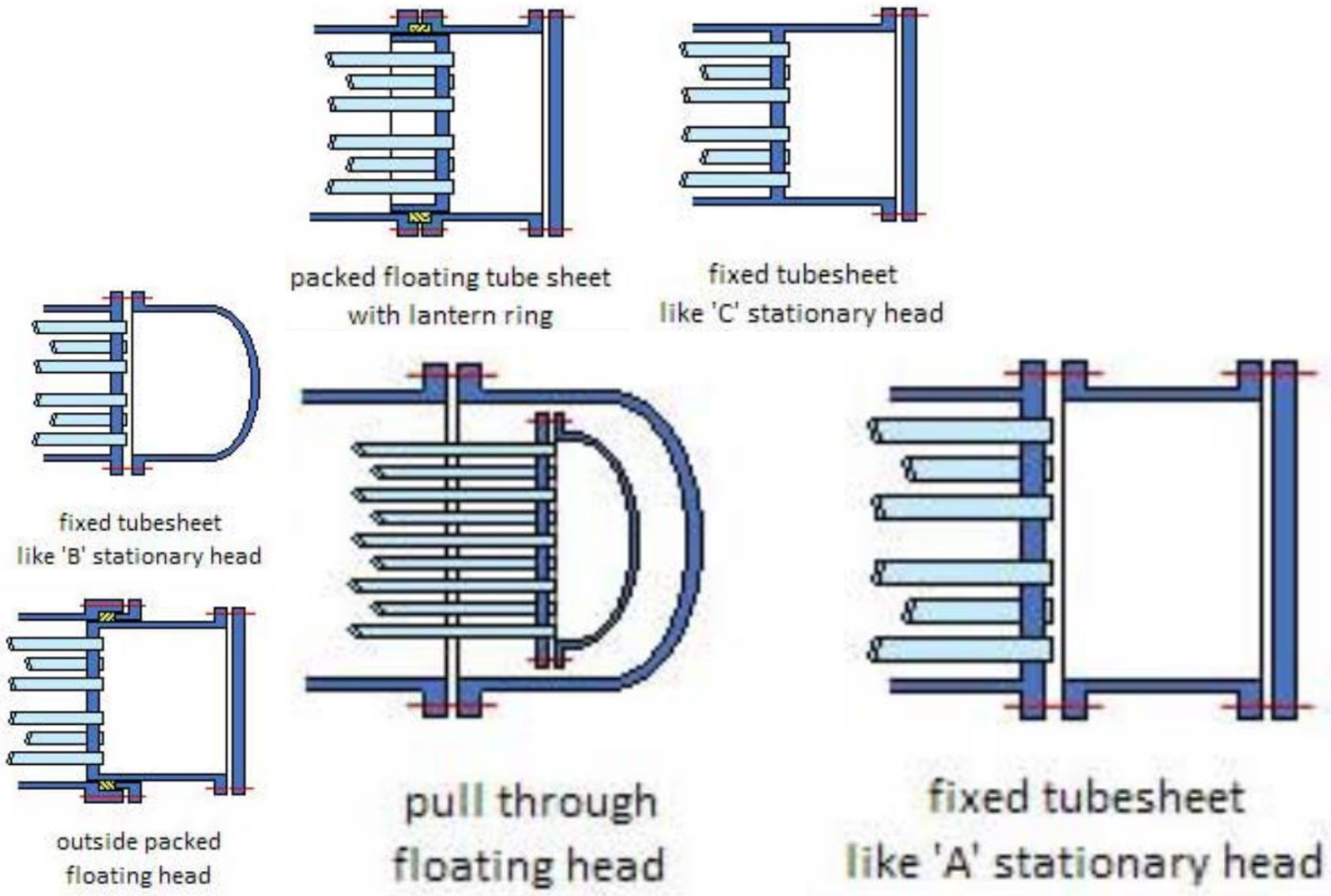

Stacked Exchangers

Shell-and-tube heat exchangers may be stacked on top of one another and piped as two exchangers in parallel or two exchangers in series.

Stacking reduces piping and saves space.

Stacking may also be an effective way to allow for increased capacity during future expansion if the lower exchanger is originally designed for future stacking.

Air cooled heat exchangers

They use air to remove heat from a fluid.

Which picture show air cooled heat exchangers?

Main Components

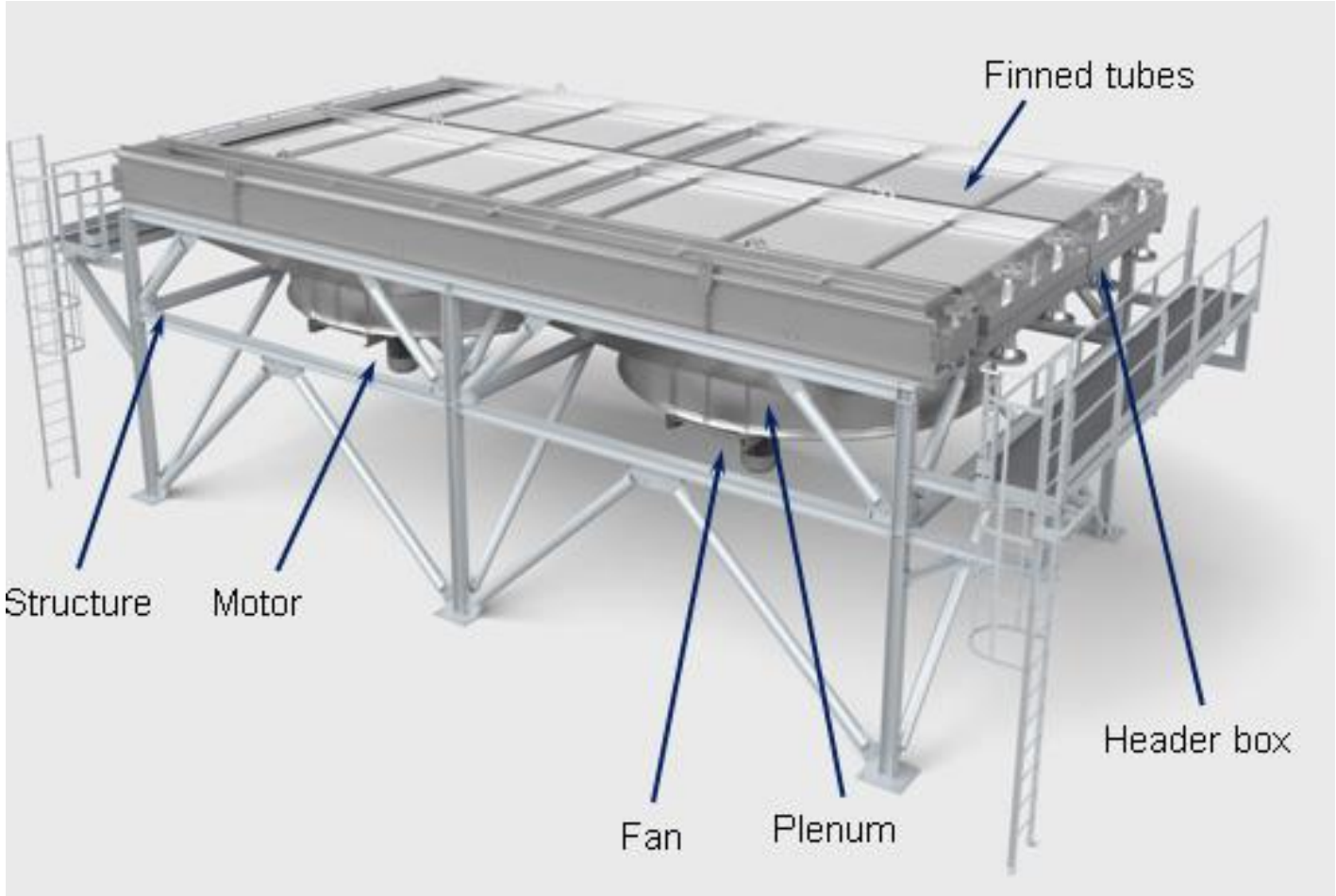

- **Bundles** can be configured to be single or multipass depending on thermal design requirements.
- **Plenum** is the sheet metal enclosure to minimize bypassing of air flow across the tube bundle.

Hairpin (or double-pipe) heat exchangers

- Hairpin heat exchangers find application in a variety of services requiring small heat-transfer surfaces, particularly when one stream is a gas or viscous liquid, or its flowrate is small. Economics favor hairpin exchangers for high-pressure service because of their **small shell diameter**. These exchangers are suited for **handling dirty streams** because **of the ease of cleaning and maintenance**.

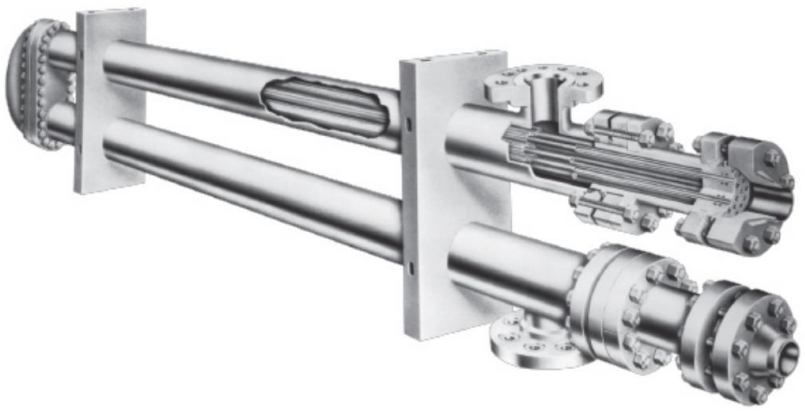

Plate heat exchangers

- Plate heat exchangers typically serve low to medium pressure fluids. They employ more countercurrent flow which allows high temperature changes, and increased efficiencies.
- Advantages:
  - Efficient.
  - Plate type heat exchanger can be easily maintained and cleaned.
  - Capacity can be increased by introducing plates.
- Disadvantages :
  - Initial cost is high since Titanium plates are expensive.
  - Poor sealing and easy to leak.

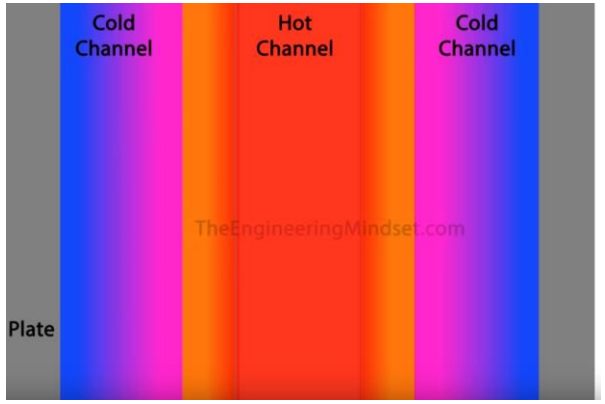

Spiral Exchanger

- A spiral heat exchanger is a circular vessel consisting of two concentric spiral channels, one for each fluid.
- One fluid enters the **center** of the unit and spirals **outward** while the other enters out the **outside diameter** and spirals toward **the center.**
- The spiraling and the turbulence created by the studs which separate the spiral plates enhances heat transfer, keeps solids in suspension, and helps clean the heat transfer surfaces.
- **Application**: They are particularly suited where one or both fluids are “difficult” or “dirty” (e.g., liquid with suspended fibers).

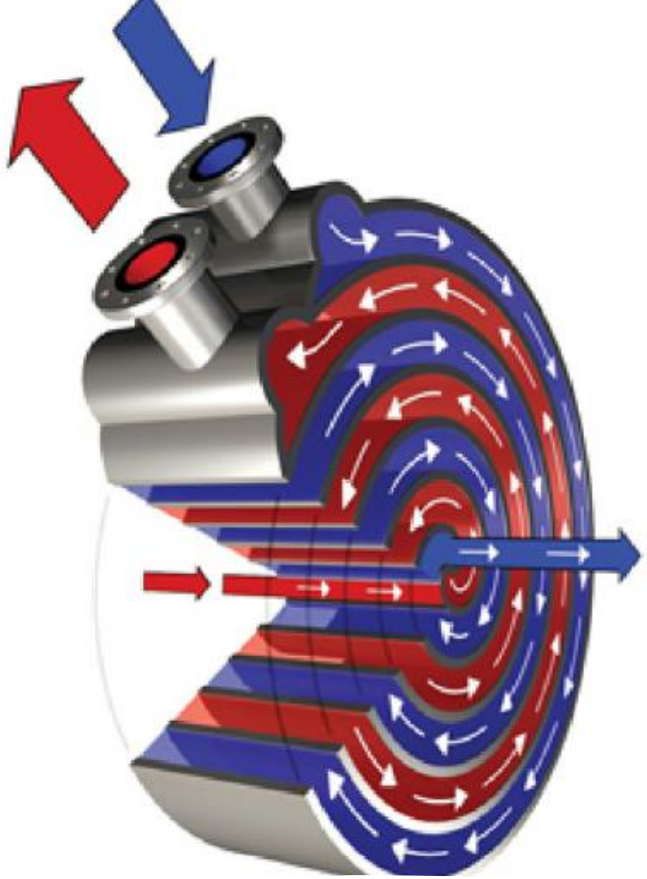

Electric heat exchangers

- Electric heat exchangers can be configured to suit almost any heating requirement.
- Chemical process industries employ electric heating for warming:
  - Large storage tanks.
  - Trace heating.
  - Railroad tank-car heating.

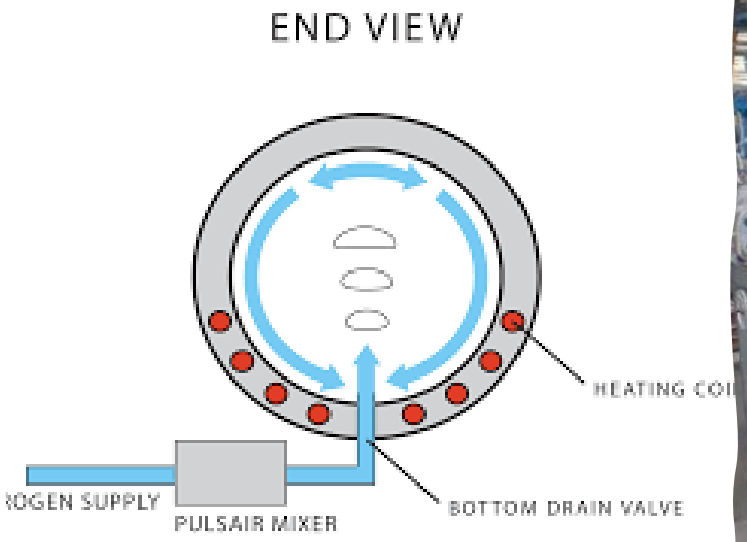

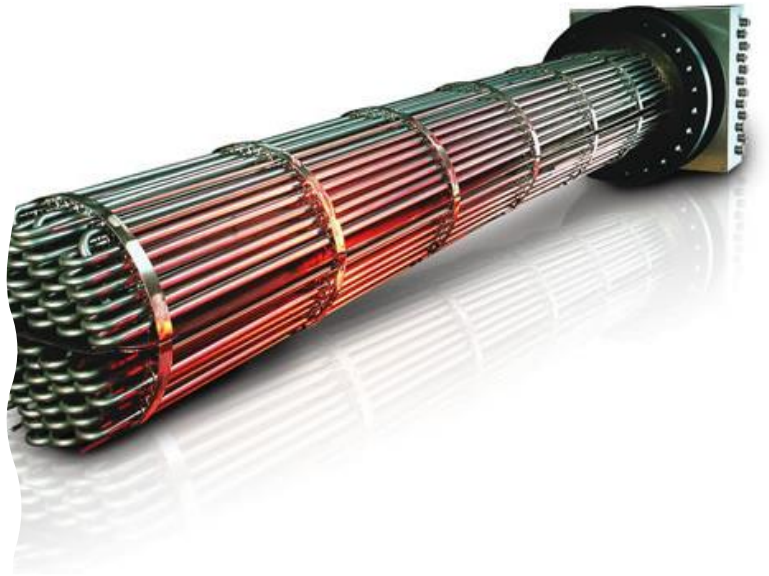

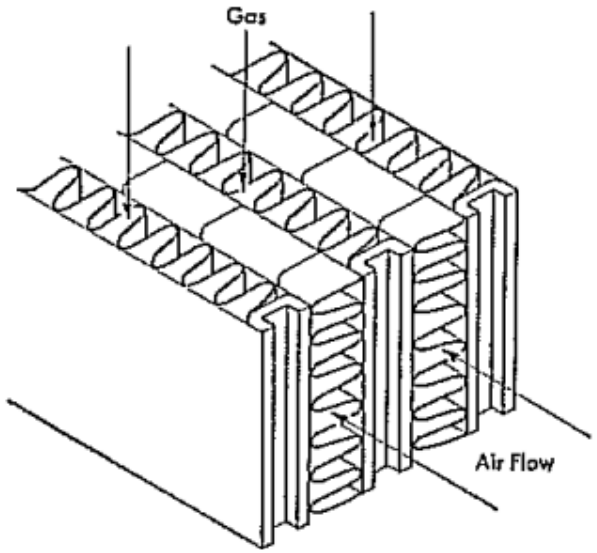

Plate-Fin (Cold Box) Exchangers

- Plate-Fin exchangers consist of a stack of **flat plates** alternating with **corrugated plates**.
- The orientation of the corrugations is alternately rotated ninety degrees.
- Each layer is surrounded at the edges by **solid side bars**.
- **Application**: Their unique simple structure and counterflow arrangement allow them to handle two or more streams simultaneously with large temperature ranges. They are light weight and dependability.

Problems

Describe Fouling phenomena in the heat exchanger

- Fouling is defined as the accumulation and deposit of unwanted substances that form on the external and internal surfaces of heat exchangers.
- Unwanted substances are such as insoluble salts, corrosion products and suspended solids.
- Fouling results in a reduction in the thermal performance and increase in pressure drop.

Leakage

- The most common practice is to make a **temporary shutdown** to plug the leaking tube (usually too high a pressure drop, bad exit temperatures or frequent shutdowns).
- At that point the choices are to replace or overhaul the heat exchanger.
- Eye
- Chemical Testing
- Hydrostatic Testing: heat exchanger is taken offline, and drained. Then passing high pressure water.

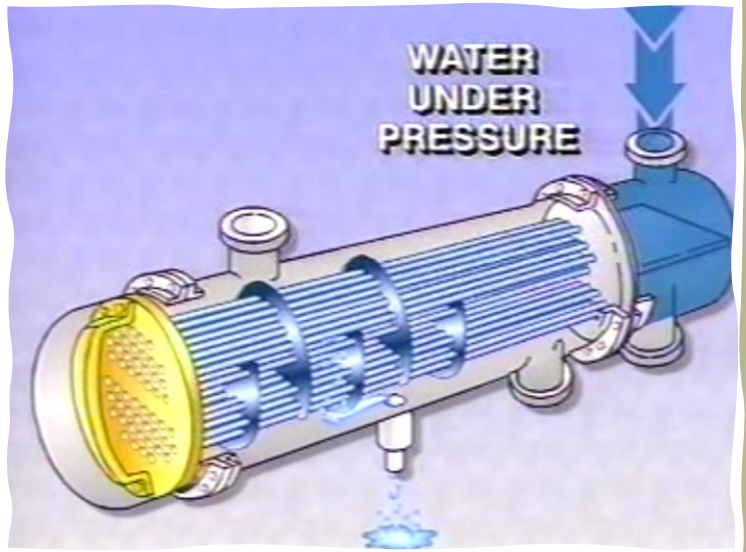

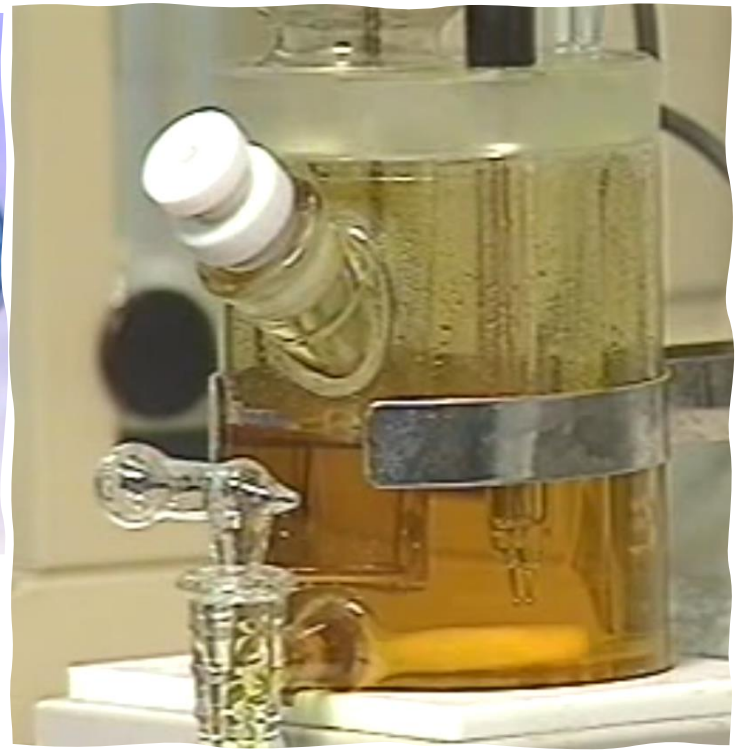

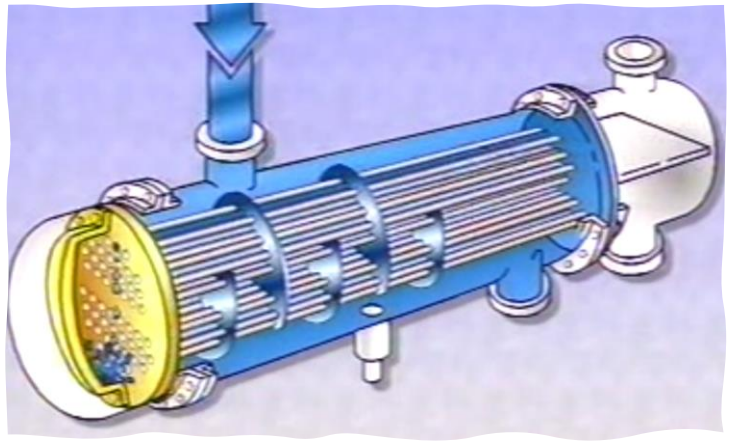

Materials Science and Engineering

Why study Materials Science and Engineering?

- Many engineers, whether mechanical, civil, chemical, or electrical, is at one time or another exposed to a design problem involving materials, such as a transmission gear.
- Many times, a materials problem is one of selecting the right material from the thousands available. The final decision is normally based on:
    1. The **in-service conditions** to which the material will be subjected.
    2. Any **deterioration** of material properties during operation due to elevated temperatures or corrosive environments
    3. The **cost** of the fabricated piece.

What are the key mechanical design properties?

- Stiffness
- Strength
- Hardness
- Ductility
- Toughness

What is the strength of a material?

- The **strength of a material** is its ability to withstand an applied load without failure or plastic deformation.

What is the diagram of stress and strain? explain

- A specimen is deformed, usually to fracture, with a gradually increasing tensile load that is applied uniaxially along the long axis of a specimen.
- The tensile testing machine is designed to elongate the specimen at a constant rate, and to continuously and simultaneously measure the instantaneous applied load (with a load cell) and the resulting elongations (using an extensometer).

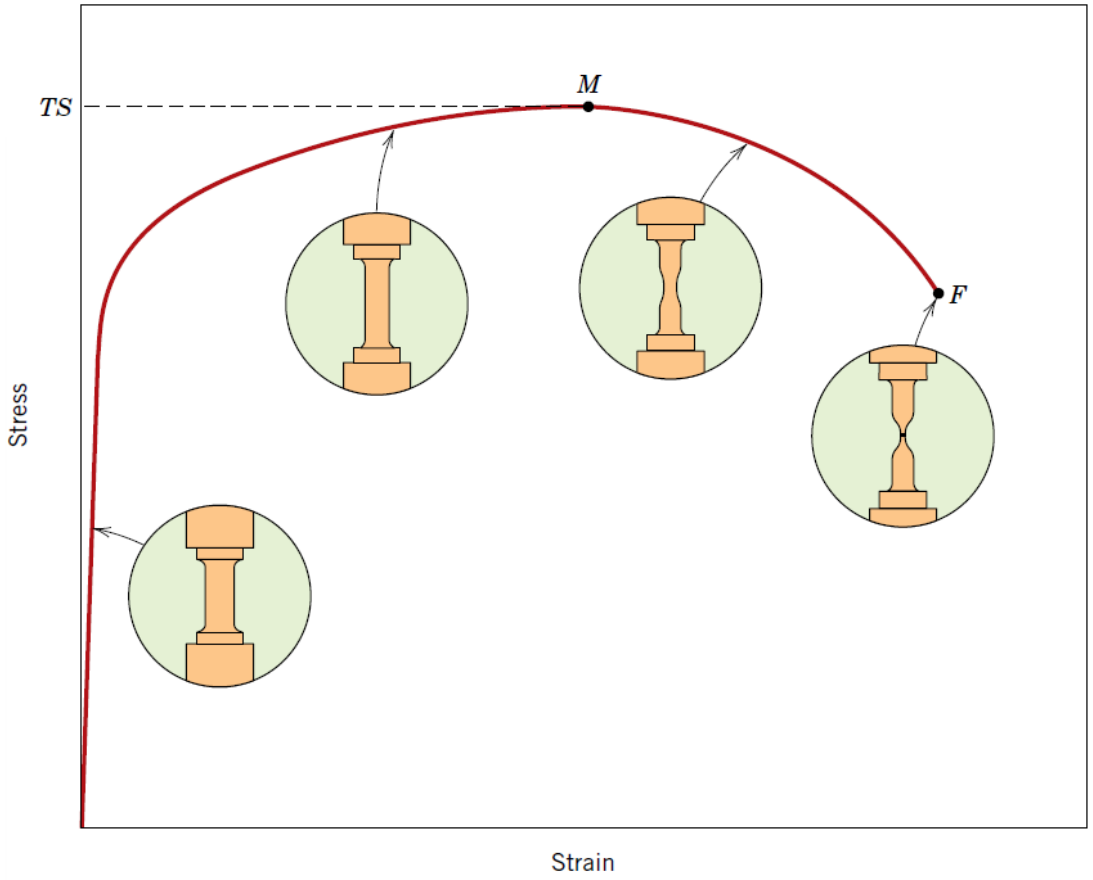

What is **Engineering Stress**?

$$\sigma = \frac{F}{A_0}$$

- **F** is the **instantaneous load** applied perpendicular to the specimen cross section, in units of newtons (N) or pounds force (lbf).
- ***Ao*** is the **original cross-sectional area** before any load is applied. (m2 or in2).
- The units of engineering stress are
  - **MPa.**
  - **psi:** pounds force per square inch.

What is **Engineering Strain**?

$$\epsilon = \frac{l_i - l_0}{l_0} = \frac{\Delta l}{l_0}$$

- It is the change in length at some instant, as referenced to the original length.
- ***lo*** is the **original length.**
- ***li*** is the **instantaneous length**.
- The unit of engineering strain is **unitless.**

What is **Modulus of Elasticity**?

- For most metals that are stressed in tension and at relatively **low levels**, stress and strain are proportional to each other through the relationship called *Hooke's law*, and the constant of proportionality ***E*** is called:
  - Modulus of Elasticity.
  - Young's Modulus.

- The units of modulus of elasticity are:
  - GPa
  - psi

$$\sigma = E\epsilon$$

What is **Modulus of Elasticity**? Draw it

- The modulus of elasticity may be thought of as **stiffness**, the greater the modulus, the stiffer the material.
- The modulus of elasticity may be thought of as a material's **resistance to elastic deformation.**
- **On an atomic scale**, E is a measure of the resistance to separation of adjacent atoms.

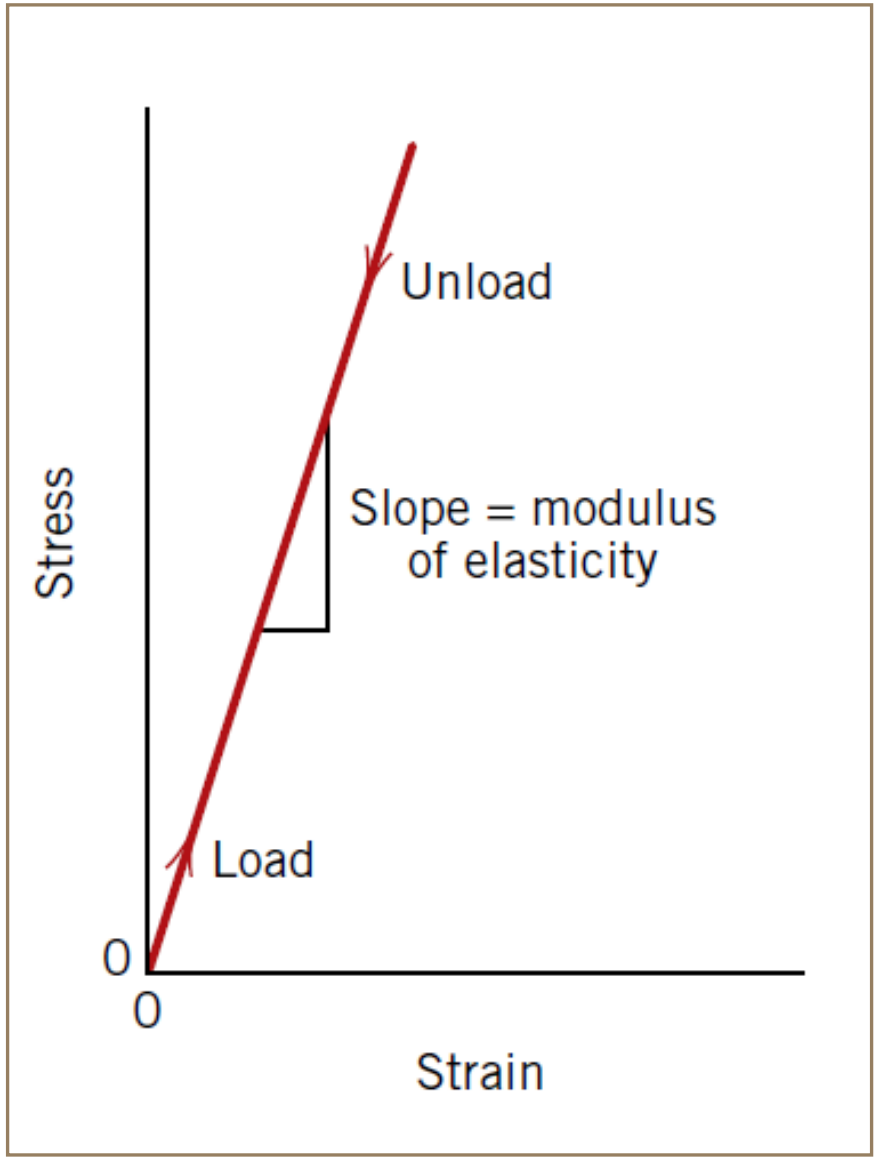

What is **Elastic Deformation**?

- Deformation in which stress and strain are proportional is called **elastic deformation**.
- Elastic deformation is **nonpermanent**, which means that when the applied load is released, the piece returns to its original shape.

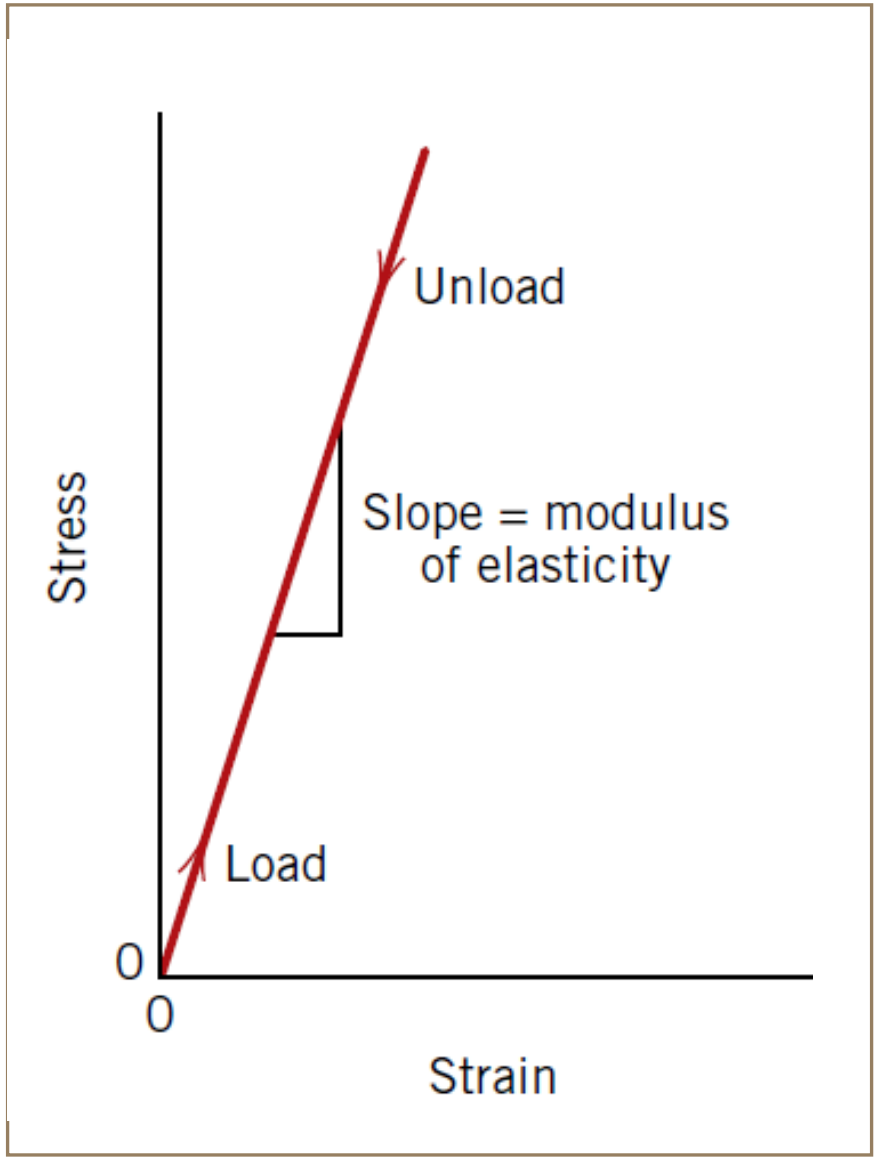

What is **Plastic Deformation**?

- As the material is deformed beyond a certain strain (usually 0.005), the stress is no longer proportional to strain, and permanent, nonrecoverable, or **plastic deformation** occurs.

- From an atomic perspective, plastic deformation corresponds to the breaking of bonds with original atom neighbors and then the re-forming of bonds with new neighbors.

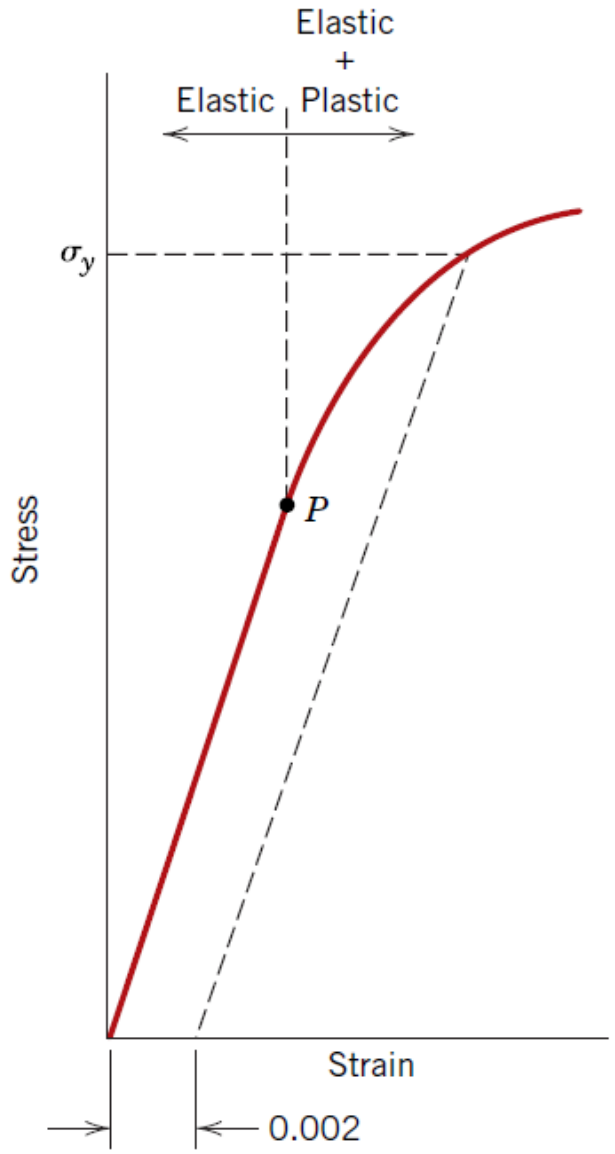

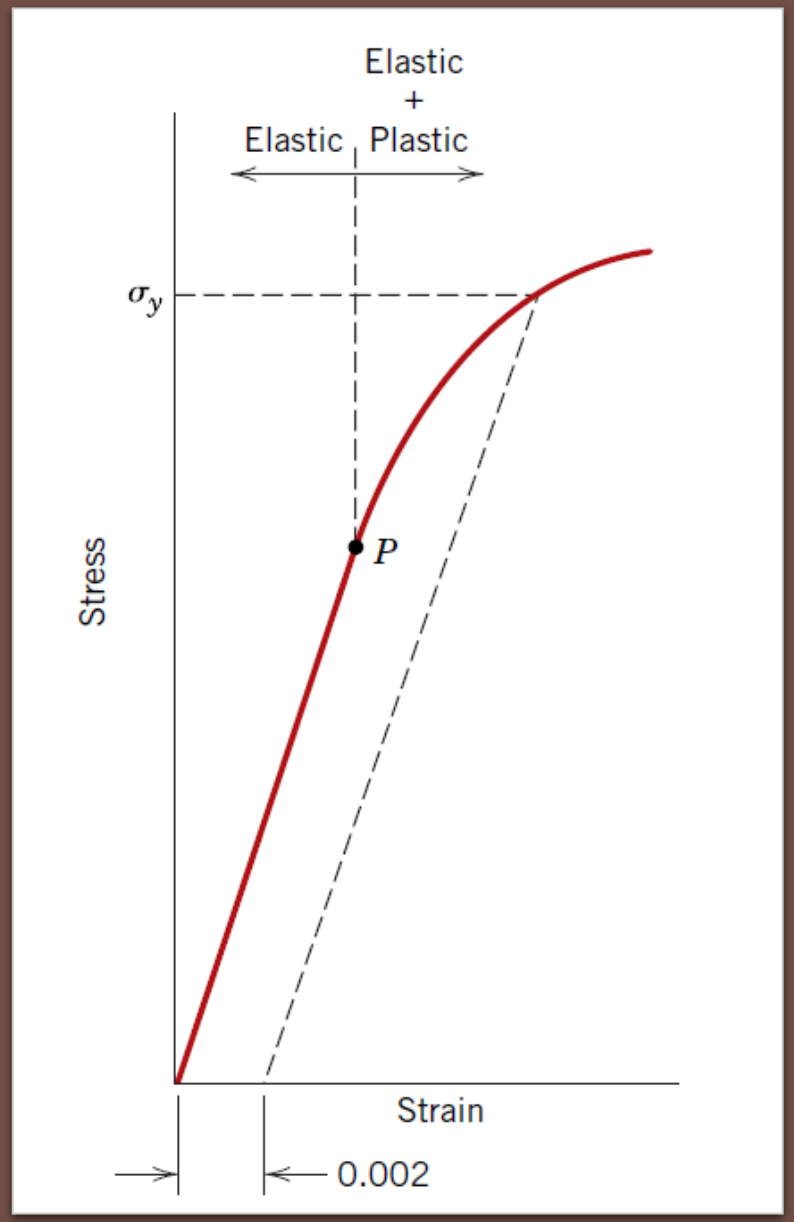

What is yield stress? Draw yield strength diagram

- Most structures are designed to ensure that only elastic deformation will result when a stress is applied. A structure or component that has plastically deformed—or experienced a permanent change in shape—may not be capable of functioning as intended.
- **Proportional Limit (P)** represents the onset of plastic deformation on a microscopic level- difficult to measure.
- As a consequence, a convention has been established by which a straight line is constructed parallel to the elastic portion of the stress–strain curve at some specified strain offset, usually 0.002.
- The stress corresponding to the intersection of this line and the stress–strain curve as it bends over in the plastic region is defined as the **yield strength (sy).**
- The magnitude of the yield strength for a metal is a measure of **its resistance to plastic deformation.**

What is the tensile strength ?

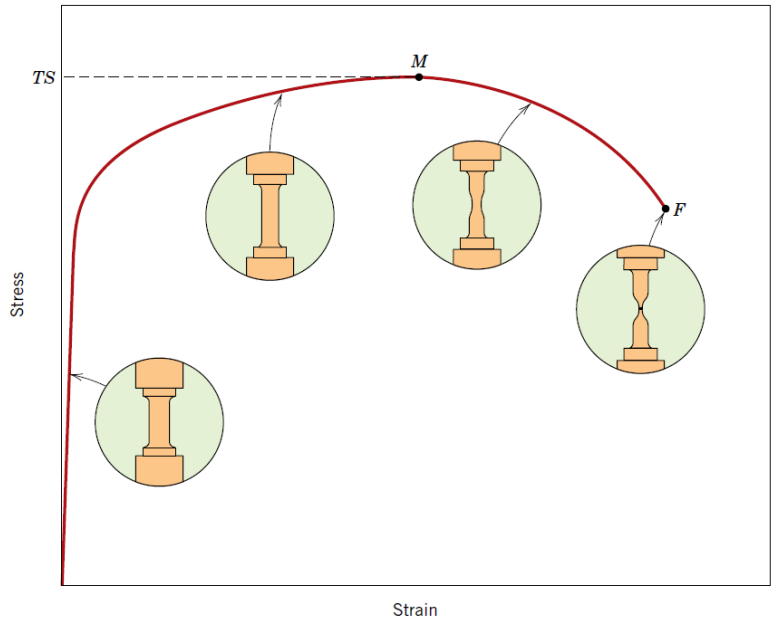

- After yielding, the stress necessary to continue plastic deformation in metals increases to a maximum, point M, and then decreases to the eventual fracture, point F.
- The **tensile strength (Ultimate Strength)** TS is the stress at the maximum on the engineering stress–strain curve.
- At this maximum stress, a neck begins to form at some point, and all subsequent deformation is confined at this neck.

$$\%EL = \left(\frac{l_f - l_0}{l_0} \right) \times 100$$

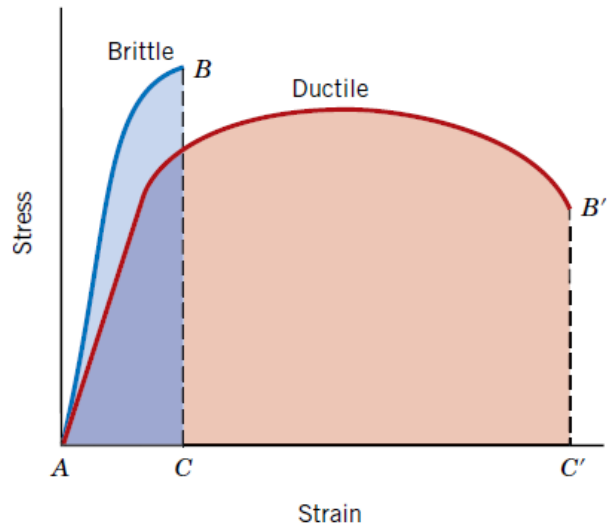

Ductile vs Brittle

- **Ductile material** (Steel, Aluminum, copper) has longer time experiencing plastic deformation before fracture occur.
- **Brittle material** (cast iron, ceramic, and concrete) experiences very little or no plastic deformation upon fracture is termed.

What is toughness?

- **Toughness** is resistance to brittle fracture
- It is the area under the stress strain curve.
- Impact testing is a measure a material's toughness.

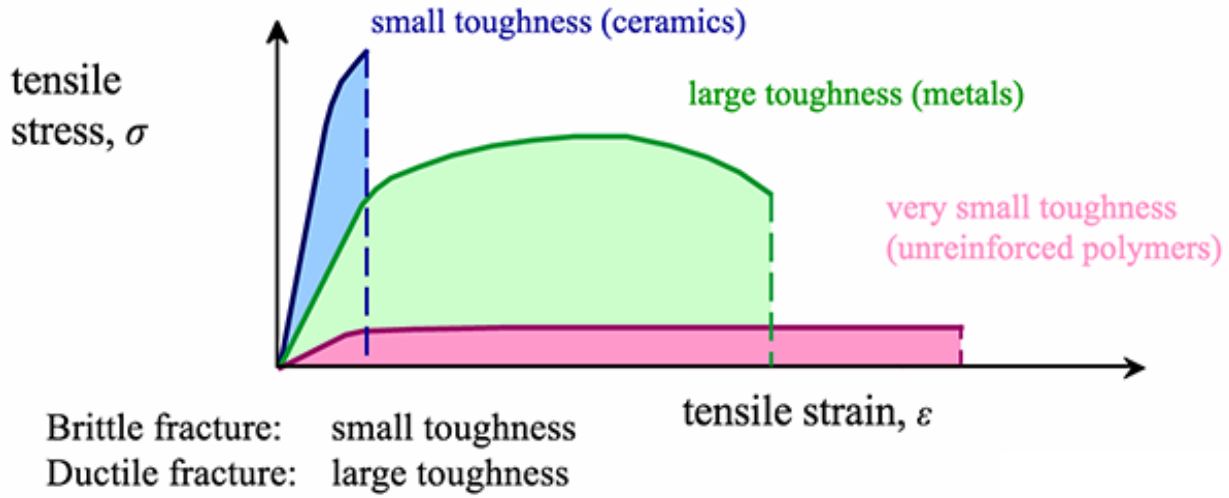

What is fatigue? When does it happen?

- Fatigue is a form of failure that occurs in structures subjected to **repeated stresses**.
- Fatigue occurs **suddenly** and without warning.
- It is possible for failure to occur at a stress level considerably lower than the tensile or yield strength for a static load.
- For these materials, the fatigue response is specified as **fatigue strength,** which is defined as the stress level at which failure will occur for some specified number of cycles.
- Another important parameter that characterizes a material's fatigue behavior is **fatigue life** *Nf*. It is the number of cycles to cause failure at a specified stress level.

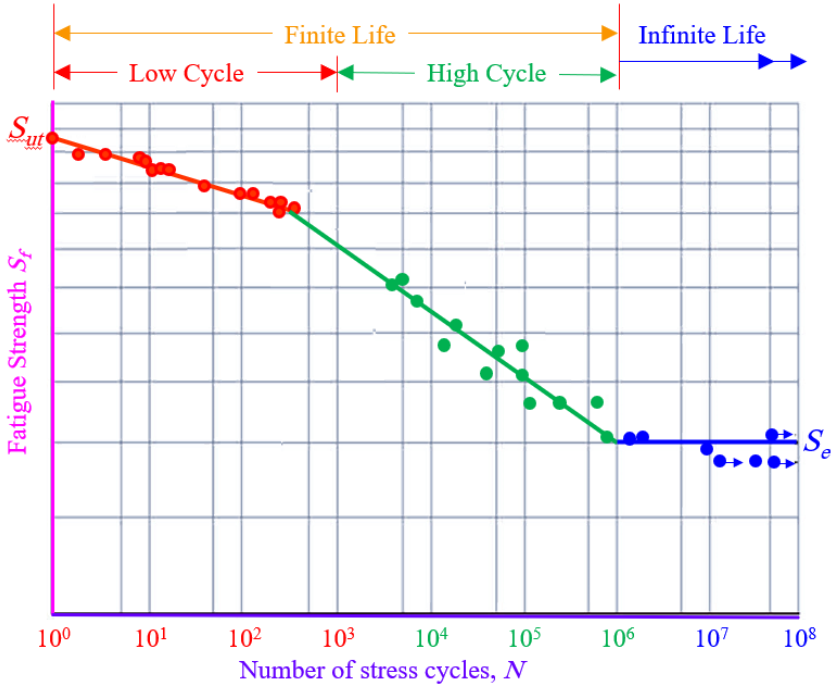

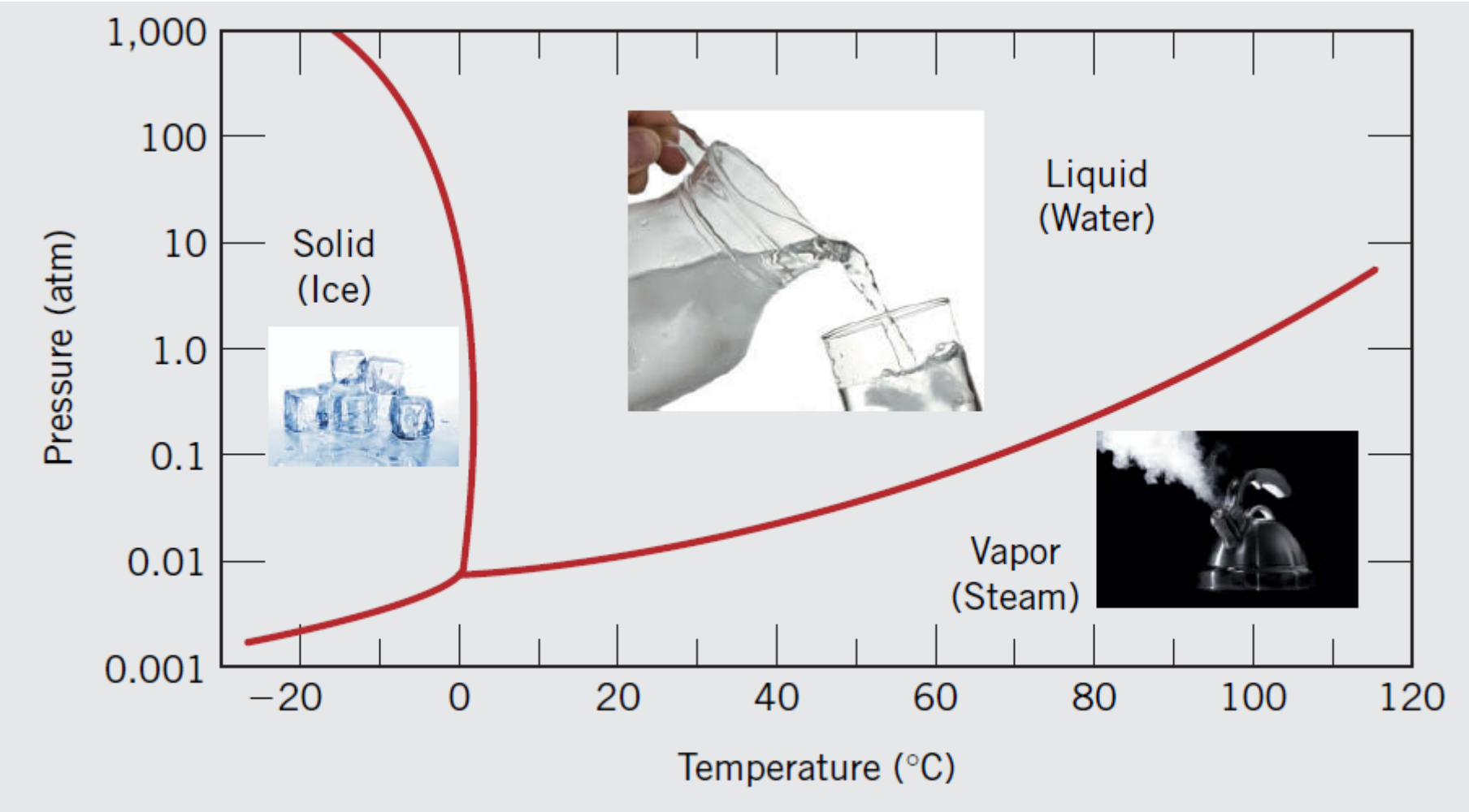

Draw water phase diagram

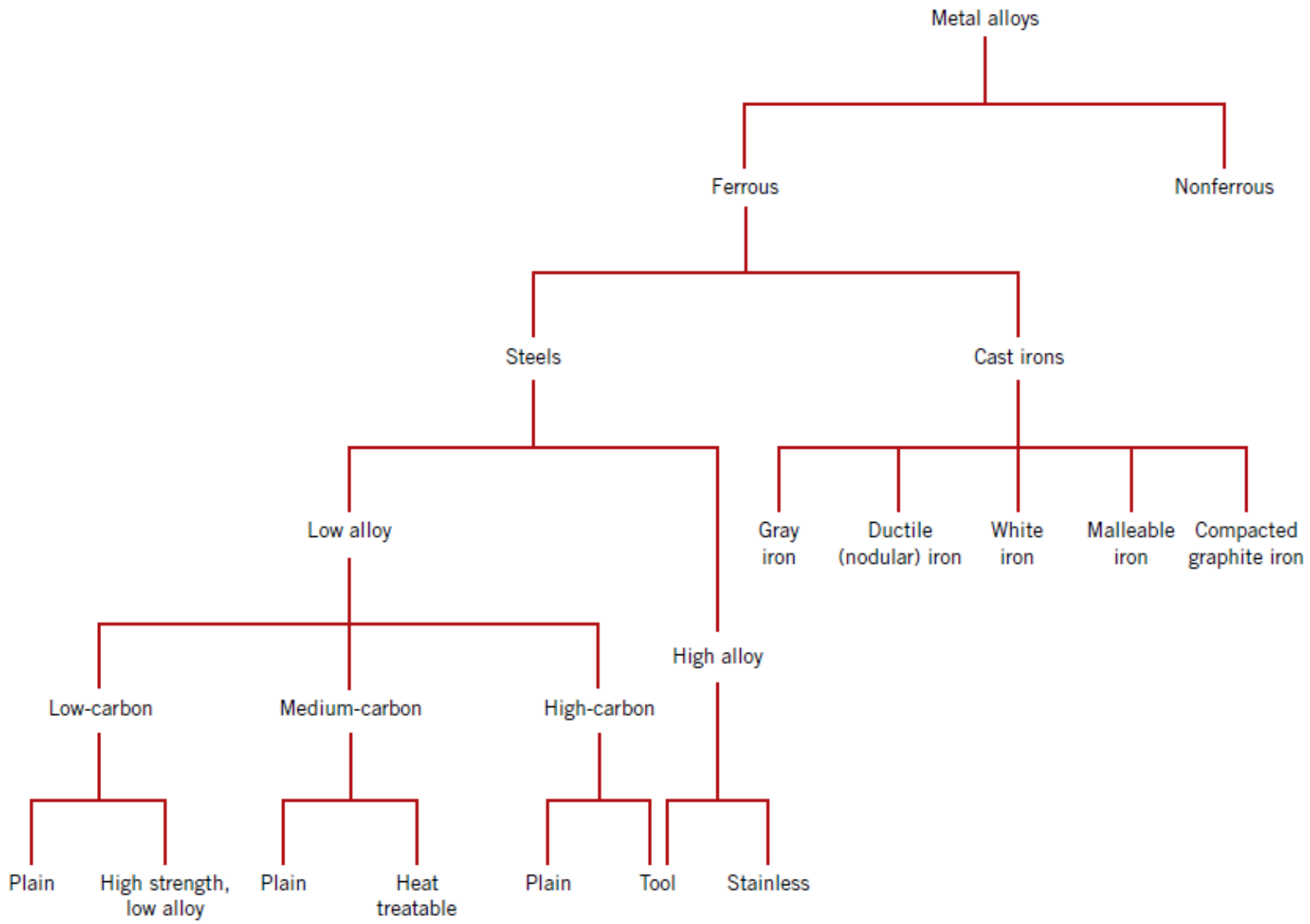

Figure 11.1 Classification scheme for the various ferrous alloys.

Types of steel

Types of materials - **Metals**

- With regard to mechanical characteristics, these materials are relatively stiff and strong, yet are ductile (i.e., capable of large amounts of deformation without fracture), and are resistant to fracture.
- Metallic materials have large numbers of nonlocalized electrons, metals are extremely good conductors of electricity and heat.

Types of materials - **Ceramics**

- Ceramic materials are relatively stiff, strong, and very hard.
- Historically, ceramics have exhibited extreme brittleness. However, newer ceramics are being engineered to have improved resistance to fracture.
- Furthermore, ceramic materials are typically insulative to the passage of heat and electricity and are more resistant to high temperatures and harsh environments than are metals and polymers.

Types of materials - **Polymers**

- Polymers include the familiar plastic and rubber materials. Many of them are organic compounds that are chemically based on carbon, hydrogen, and other nonmetallic elements (i.e., O, N, and Si).
- These materials typically have low densities, they are not as stiff or strong as these other material types. However, on the basis of their low densities, many times their stiffnesses and strengths on a per-mass basis are comparable to those of the metals and ceramics.
- In addition, many of the polymers are extremely ductile and pliable, which means they are easily formed into complex shapes.
- One major drawback to the polymers is their tendency to soften and/or decompose at modest temperatures, which, in some instances, limits their use.

Types of materials - **Composites**

- A composite is composed of two (or more) individual materials.
- The design goal of a composite is to achieve a combination of properties that is not displayed by any single material and also to incorporate the best characteristics of each of the component materials.

What is Corrosion?

- **Deterioration of a metal resulting from chemical/electrochemical reaction by its environment.**

What is Electrochemical reaction?

- It is a chemical reaction in which there is transfer of electrons from one substance to another.
- The electrons transfer from one metal to another happens due to the potential of
- An overall electrochemical reaction must consist of at least one oxidation and one reduction reaction.
- Metal atoms characteristically lose or give up electrons in what is called an **oxidation** reaction.
- The site at which oxidation takes place is called the **anode.**
- The electrons generated from each metal atom that is oxidized must be transferred to and become a part of another chemical species in what is termed a **reduction** reaction.
- The location at which reduction occurs is called the **cathode**.

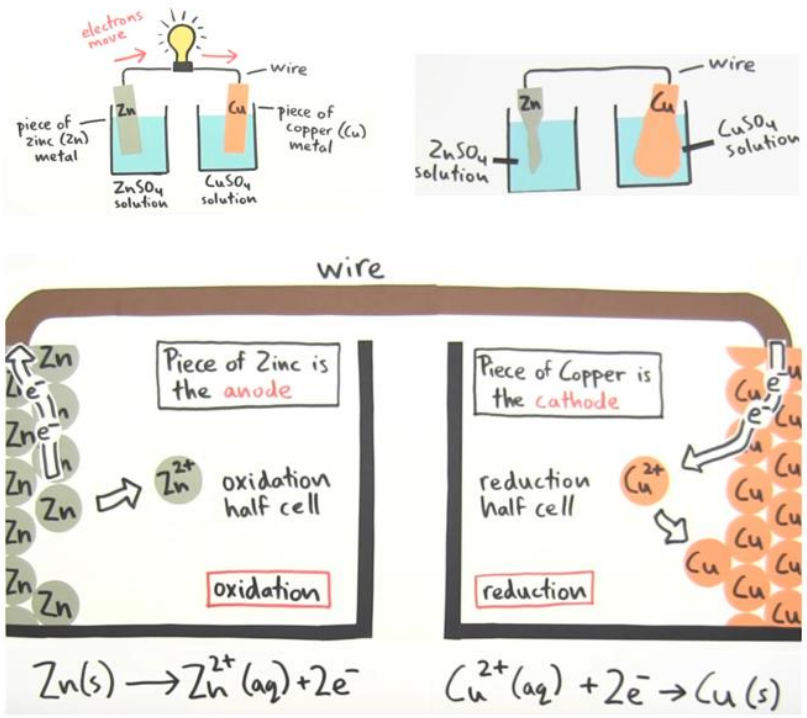

Why corrosion happens?

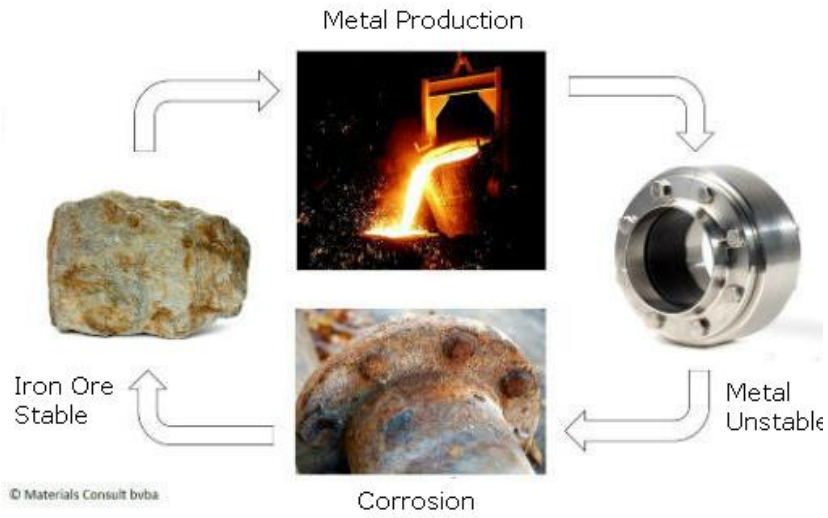

1. **In nature,** most metals are found in an **oxidized state** known as an **ore**, such as Iron Oxide (Fe_2O_3).
2. **Production of metal** requires separation of the metal from its oxide by supply of energy. For instance, the separation of iron from its oxide demands the heating of the ore in a blast furnace to about 1,600°C.
3. Metals in their uncombined condition are high energy states.
4. The **tendency** is therefore to return back to a **lower energy state** with a release of energy.
5. This tendency of metals to recombine with components of the environment is corrosion.

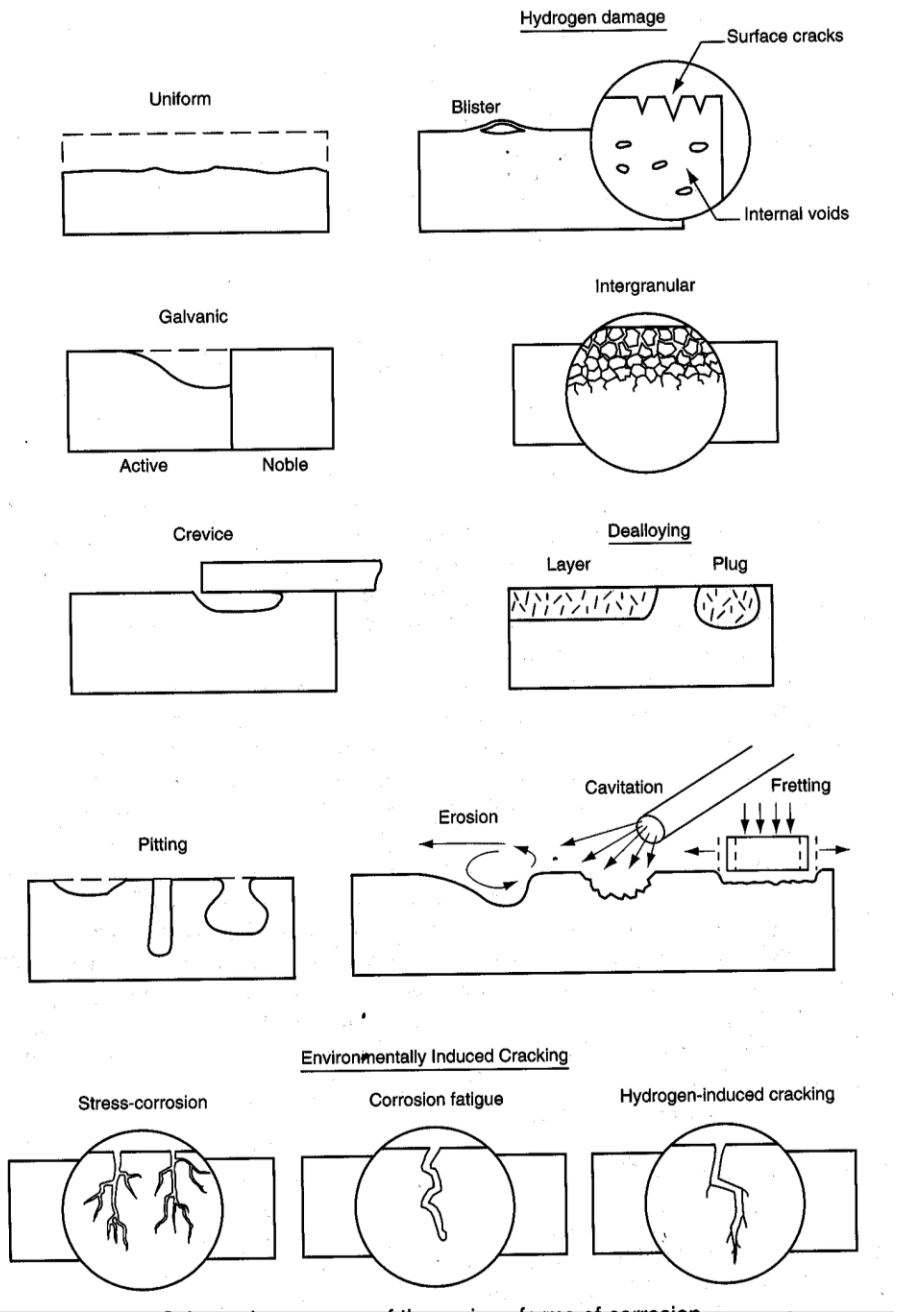

What are the types of corrosion?

Uniform	Galvanic	Crevice	Pitting
Intergranular	Selective Leaching	Erosion–corrosion	Stress corrosion

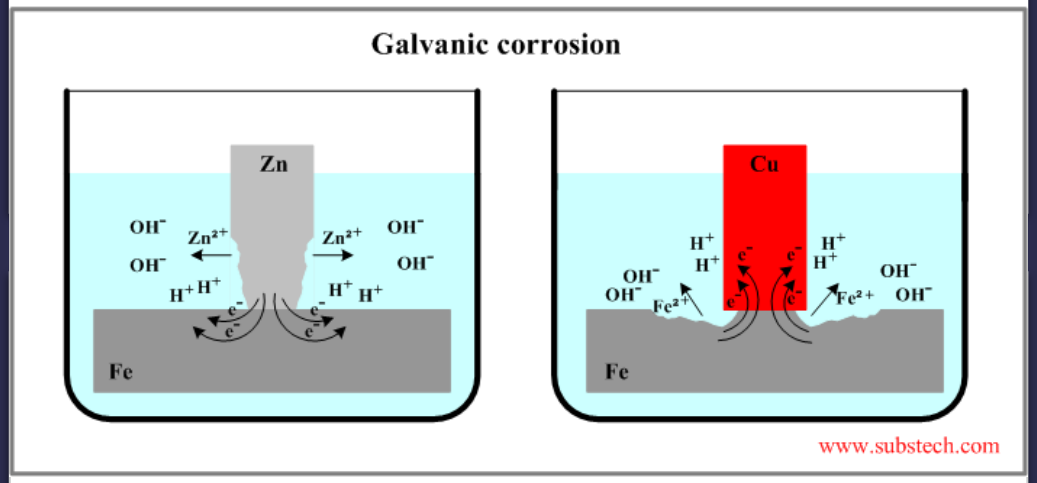

What is Galvanic Corrosion?

- **Galvanic corrosion** occurs when two different metals have **physical or electrical** contact with each other and are immersed in a common electrolyte.
- In a galvanic couple, the more active metal (the anode) corrodes at an accelerated rate and the more noble metal (the cathode) corrodes at a slower rate.

What is Uniform Corrosion?

It occurs with equivalent intensity over the entire exposed surface.

- At every sections, we would have almost about similar a **depth of attack** .

What is Stress corrosion?

- **Stress corrosion** results from the combined action of an applied tensile stress and a corrosive environment.

What is Erosion–corrosion?

- **Erosion–corrosion** arises from the combined action of chemical attack and mechanical abrasion or wear because of fluid motion.
- Turbulent flow and suspended solids in the liquid are two of many causes of this type of corrosion.
- Examples: piping systems, heat exchangers tubing.

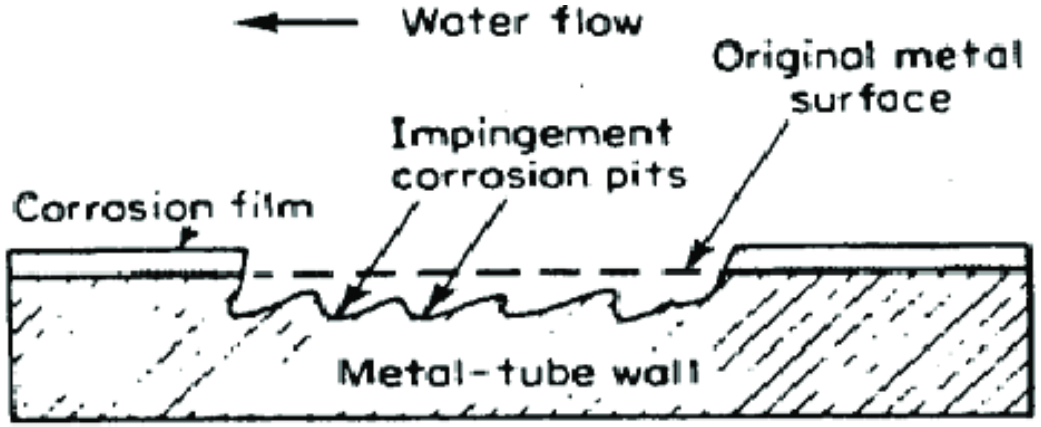

What is the difference between corrosion and erosion?

- **Erosion** is a physical process that lead to removal of material by constant flow of air, water or both on a surface.
- **Corrosion** is a deterioration of a metal resulting from electrochemical reaction by its environment.

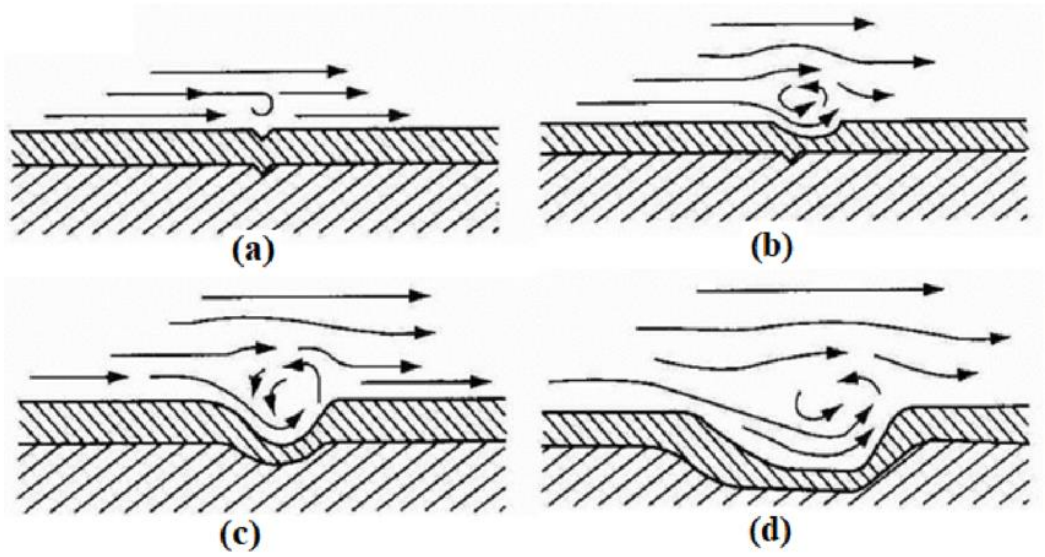

What is Crevice Corrosion?

Crevice corrosion is a localized form of corrosion occurring in **confined spaces**.

The confined space will allow only to the oxidization reaction to happen causing more corrosion on this area, while the reduction reaction happen away from that point because oxygen does not exist on the confined space.

Examples of crevices are gaps and contact areas between parts.

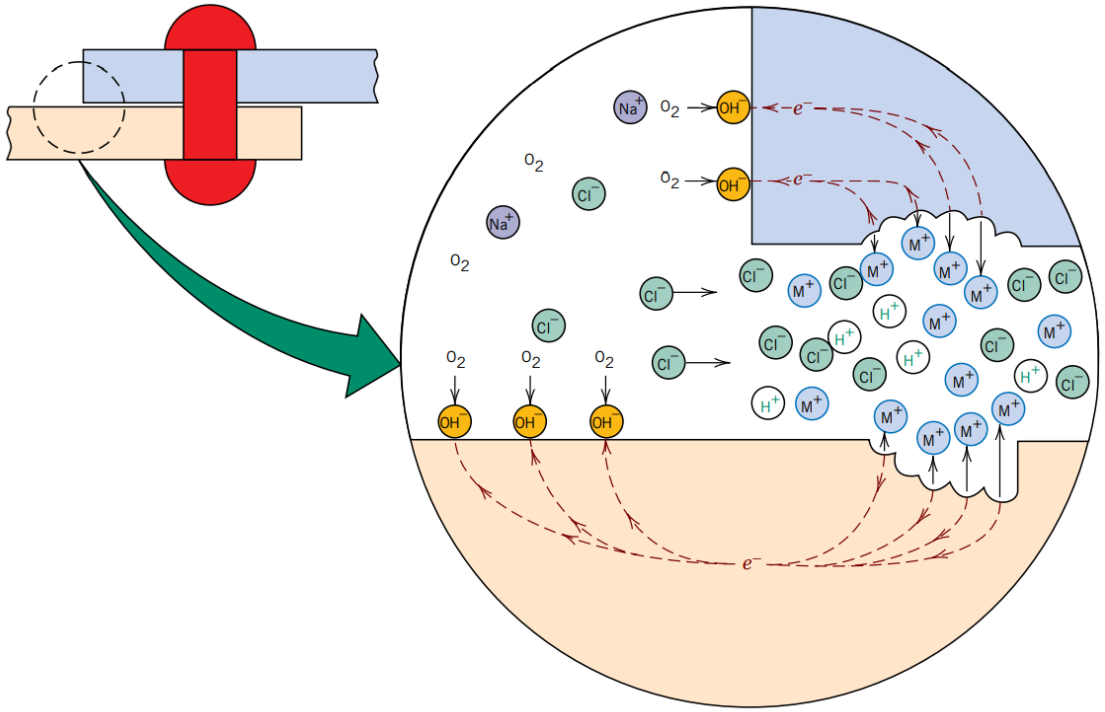

What is Pitting Corrosion?

- **Pitting** is a form of **localized corrosion** attack in which small pits or holes form.
- A pit may be initiated by a **localized surface defect** such as a scratch or a slight variation in composition.
- The mechanism for pitting is probably the same as for crevice corrosion

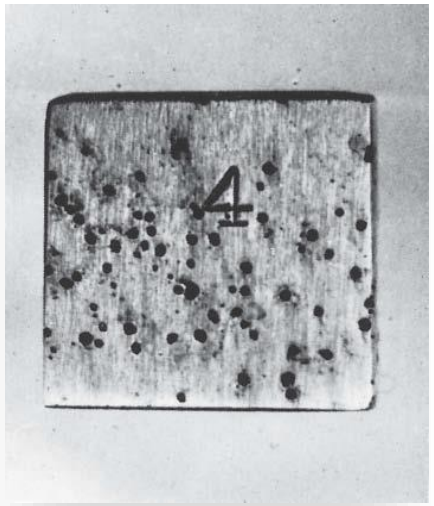

Pitting corrosion

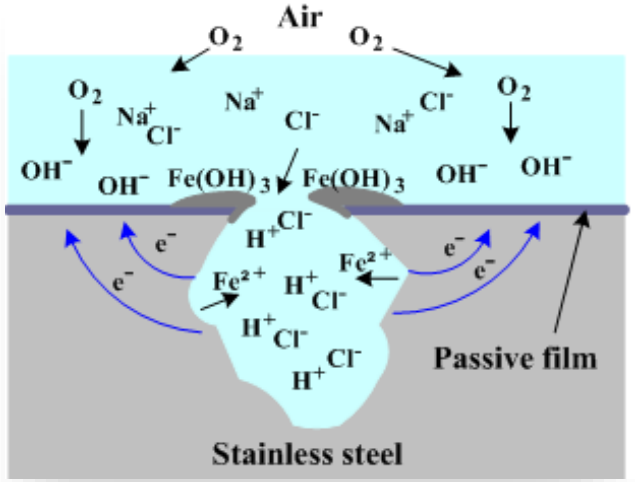

What is Intergranular Corrosion?

- Remember:
  - A **grain** is a region where the atoms are aligned.
  - A **grain boundaries** where the direction of the atoms' changes.
- **Intergranular corrosion** occurs preferentially along grain boundaries for some alloys and in specific environments.
- This type of corrosion is especially prevalent in some stainless steels.
- When heated to temperatures between 500C and 800C (950F and 1450F) for sufficiently long time periods, these alloys become sensitized to intergranular attack.

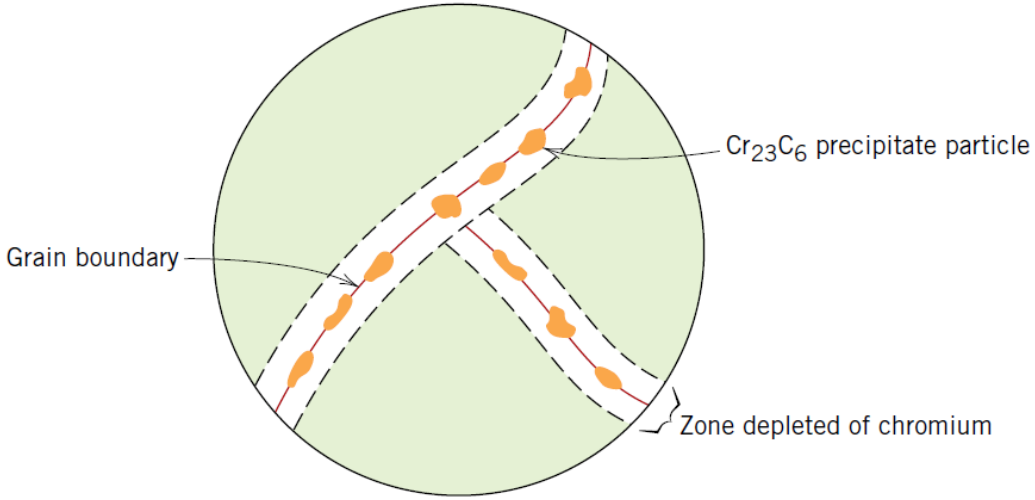

What is Selective Leaching?

- Selective leaching is found in solid solution alloys and occurs when one element is preferentially removed as a consequence of corrosion processes leaving behind a weakened structure.
- The most common example is the dealloying of brass, in which zinc is selectively leached from a copper–zinc brass alloy

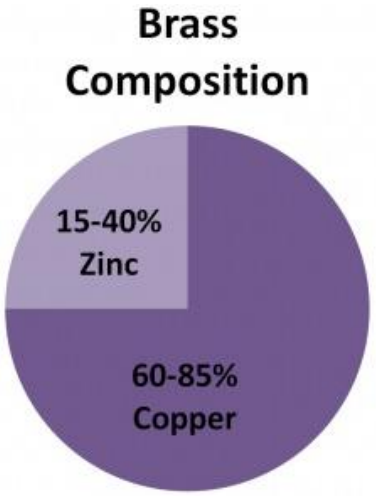

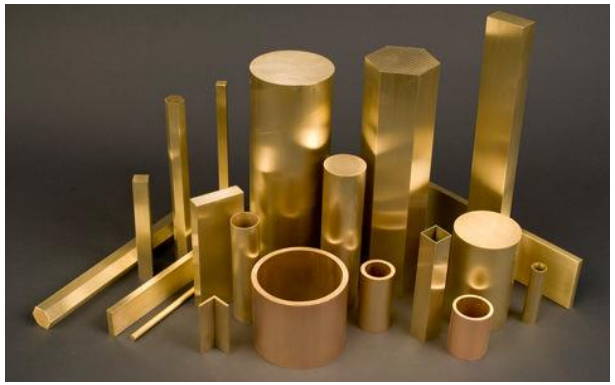

How to avoid corrosion?

1. **Inhibitors** are substances that, when added in relatively low concentrations to the **environment**, decrease its corrosiveness.
   - Some inhibitors react with and eliminate a chemically active species in the solution (such as dissolved oxygen).
   - Other inhibitor molecules attach themselves to the corroding surface and interfere with either the oxidation or the reduction reaction.
2. The **coating** must be nonreactive in the corrosive environment and resistant to mechanical damage that exposes the bare metal to the corrosive environment.
3. **Reducing the corrosion rate by** changing the character of the environment:
   - Lowering the fluid temperature
   - Lowering the velocity
4. The **correct selection of materials** that provide the optimum corrosion resistance. However, cost may be a significant factor.

Manufacturing Processes

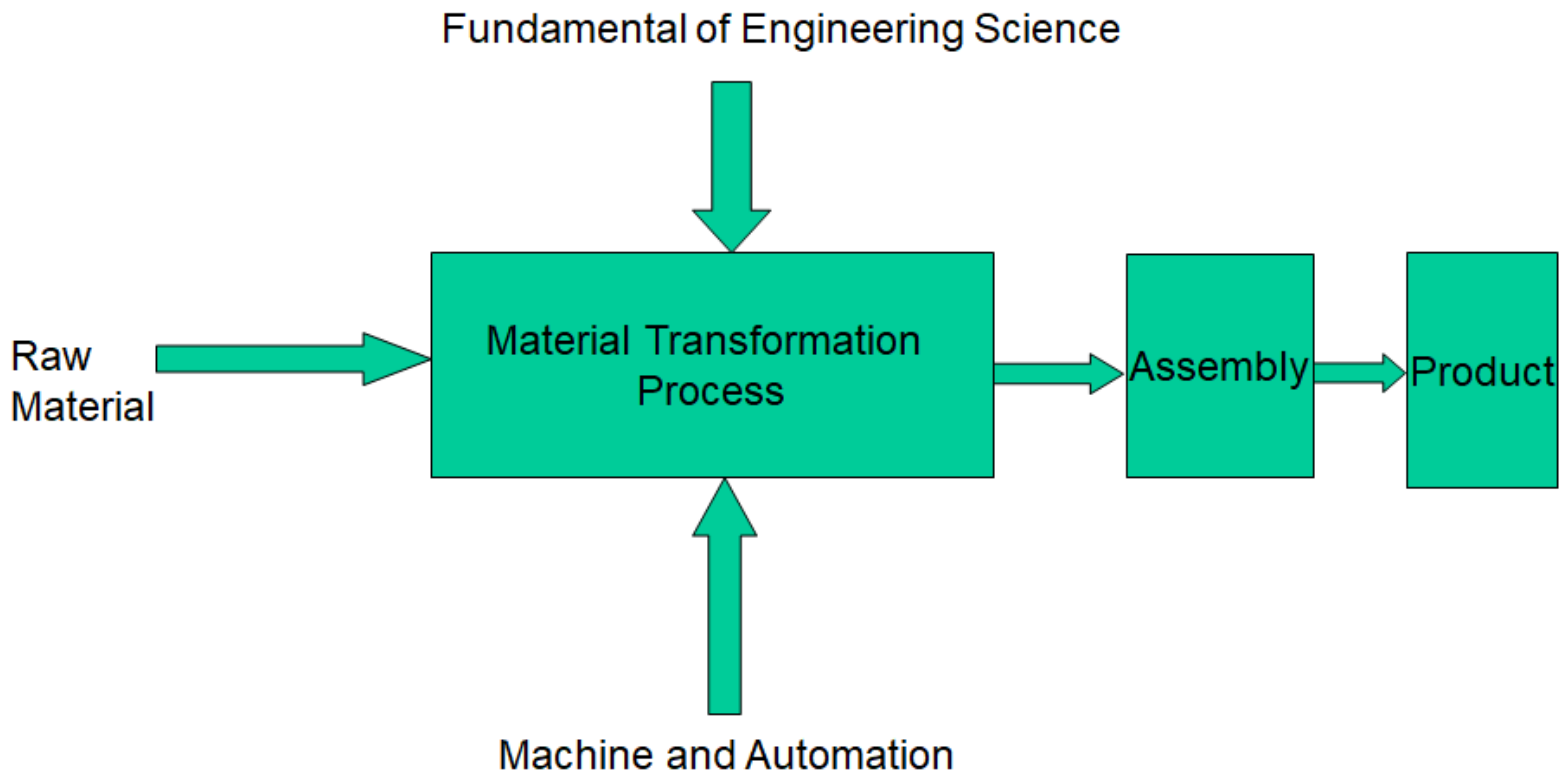

What is Manufacturing?

Manufacturing Processes

Two basic types:

1. **Processing operations** -transform a work material from one state of completion to a more advanced state
   - Operations that change the geometry, properties, or appearance of the starting material
2. **Assembly operations** -join two or more components to create a new entity

Manufacturing Processes

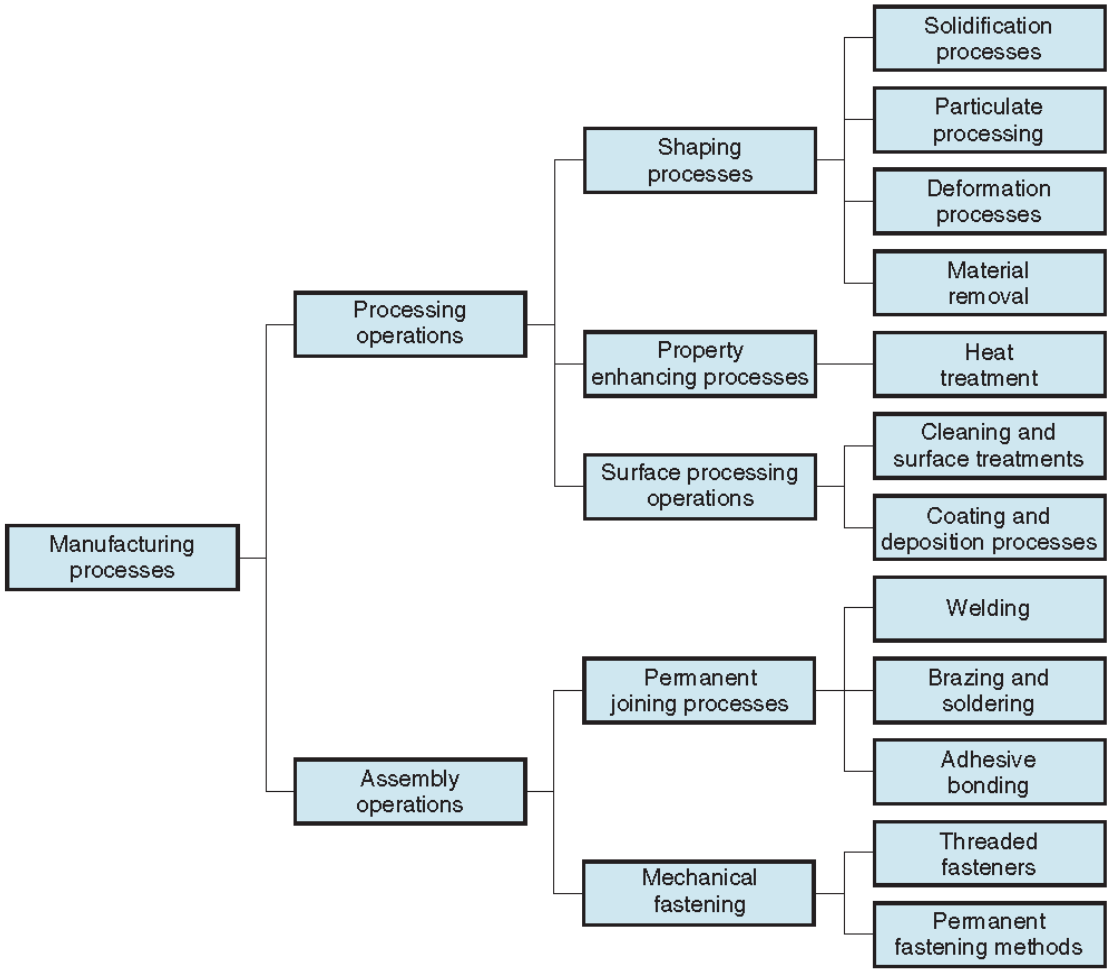

Processing Operations

- Alters a material's shape, physical properties, or appearance in order to add value.
- Three categories of processing operations:
  1. ***Shaping operations*** - alter the geometry of the starting work material
  2. ***Property-enhancing operations*** - improve physical properties without changing shape
  3. ***Surface processing operations*** - clean, treat, coat, or deposit material on surface of work

Four Categories of Shaping Processes

1. **Solidification processes** - starting material is a heated liquid.
2. **Particulate processing** - starting material consists of powders.
3. **Deformation processes** - starting material is a ductile solid.
4. **Material removal processes** - starting material is a ductile or brittle solid.

The main solidification process (Casting of Metals)

Process in which molten metal flows by gravity or other force into a mold where it solidifies in the shape of the mold cavity.

Steps in casting seem simple:

1. Melt the metal
2. Pour it into a mold
3. Let it freeze

Parts Made by Casting

- Engine blocks and heads.
- Pump housings.

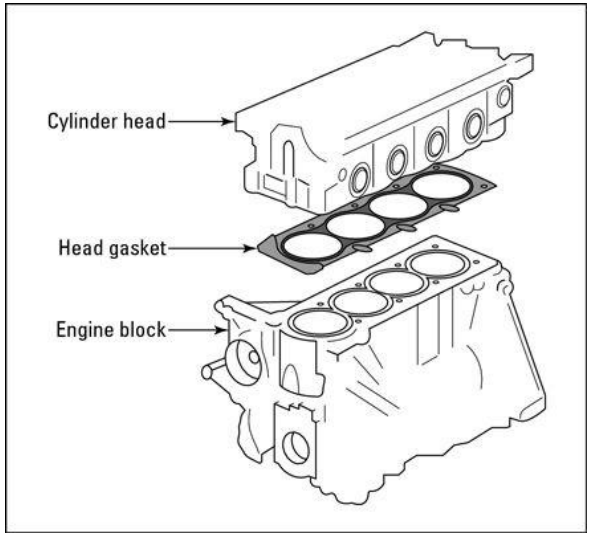

Categories of Casting Processes

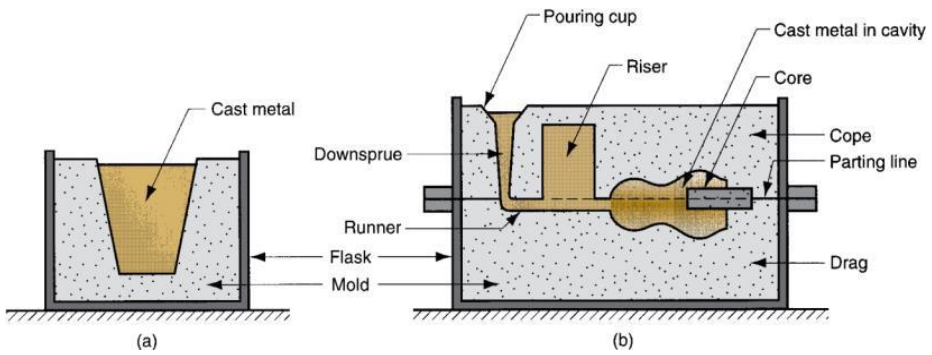

- **Expendable mold processes** –use an expendable mold which must be destroyed to remove casting
- **Permanent mold processes** –use a permanent mold which can be used to produce many castings

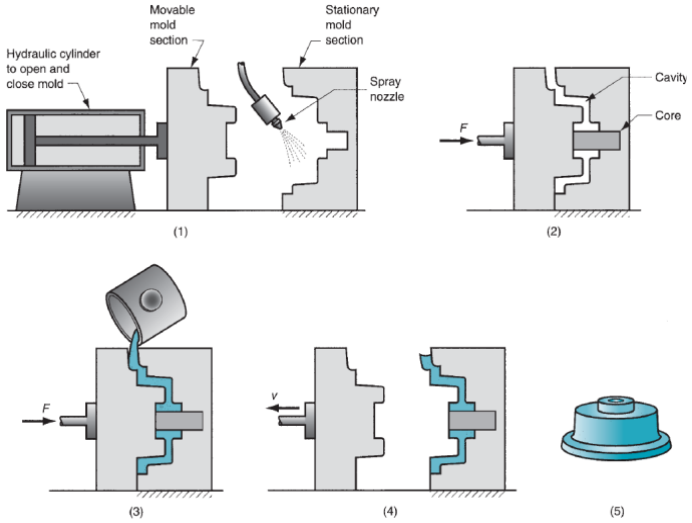

Particulate Processing

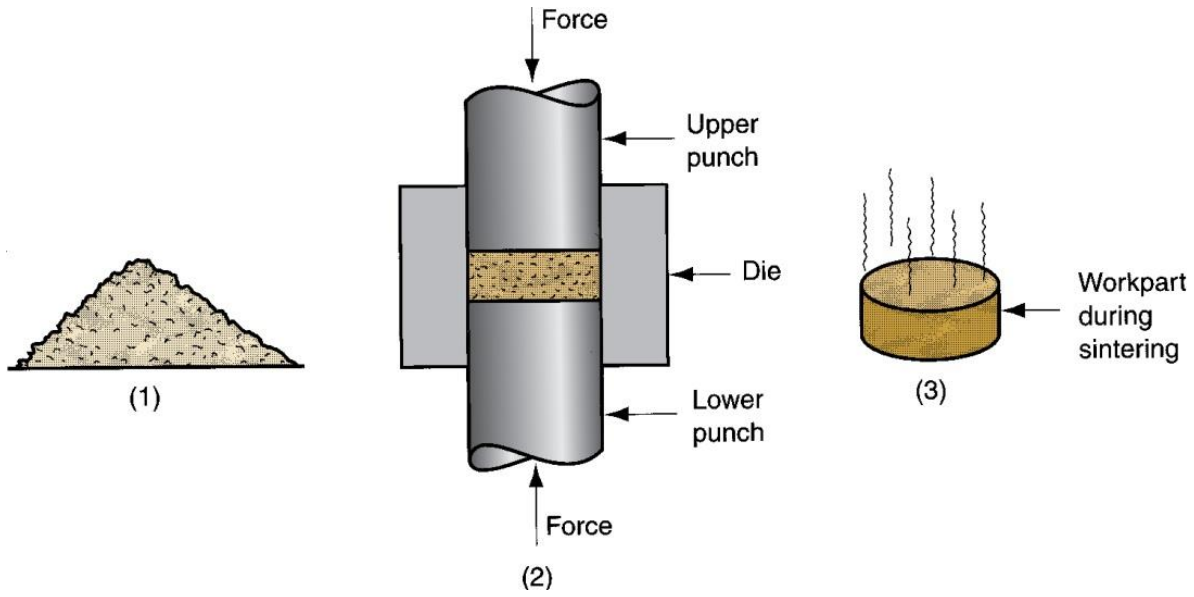

Starting materials are metal or ceramic powders, which are (2) pressed and (3) sintered.

Deformation Processes

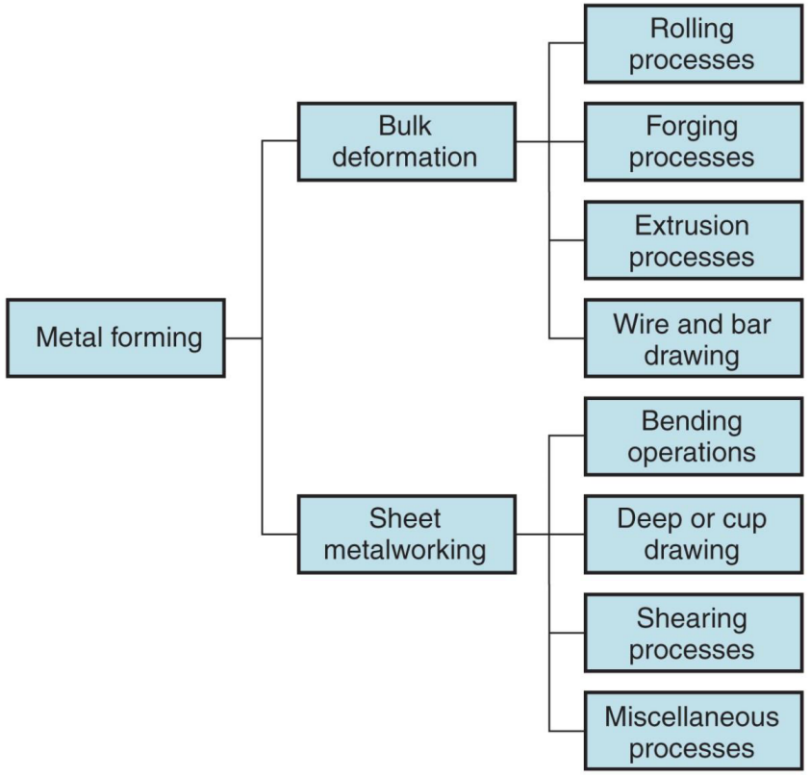

- Starting work part is shaped by application of forces that exceed the yield strength of the material.

Four Basic Bulk Deformation Processes

- **Wire and bar drawing** –diameter of wire or bar is reduced by pulling it through a die opening

Rolling

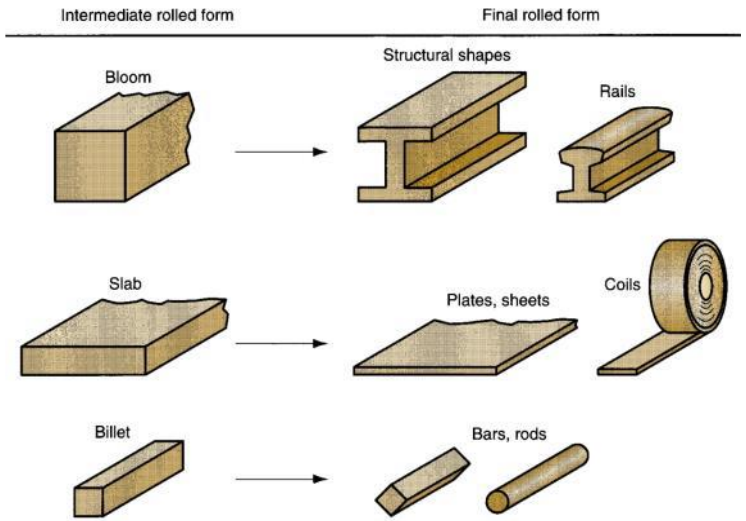

- **Rolling**– plate is squeezed between opposing rolls.

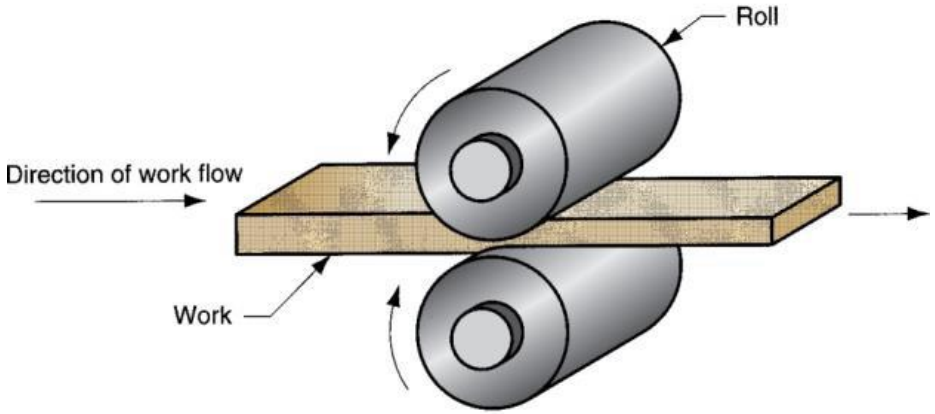

Forging

- **Forging**–work is squeezed and shaped between opposing dies

- Products: engine crankshafts, connecting rods, gears,

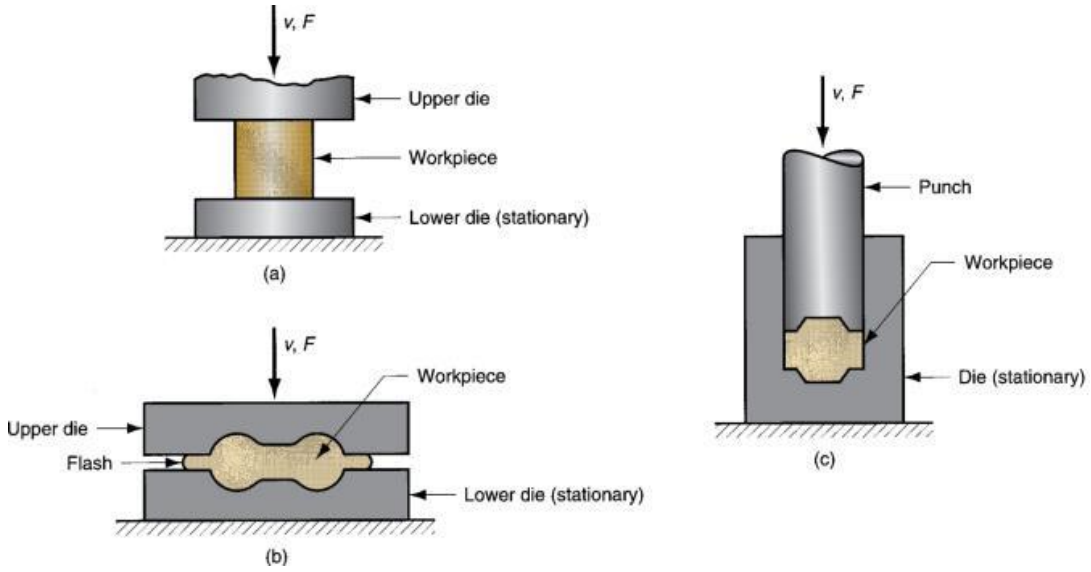

Extrusion

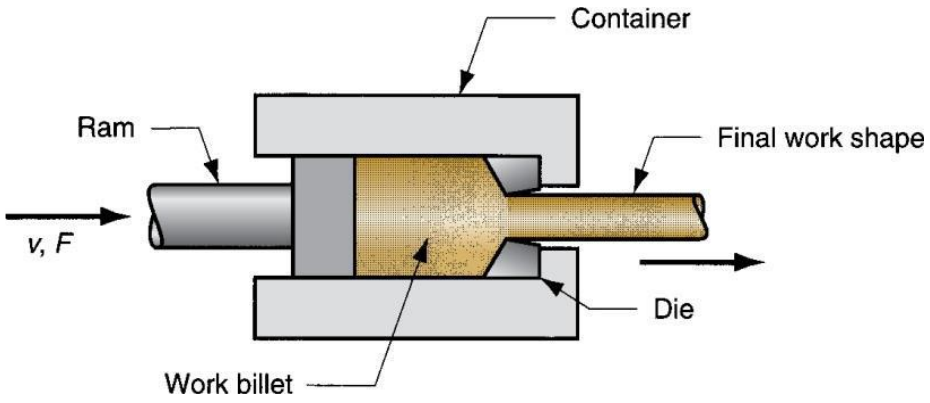

- **Extrusion**–work is squeezed through a die opening, thereby taking the shape of the opening

Material Removal Processes

- Excess material removed from the starting piece so what remains is the desired geometry.
  - Examples: (a) turning, (b) drilling, and (c) milling

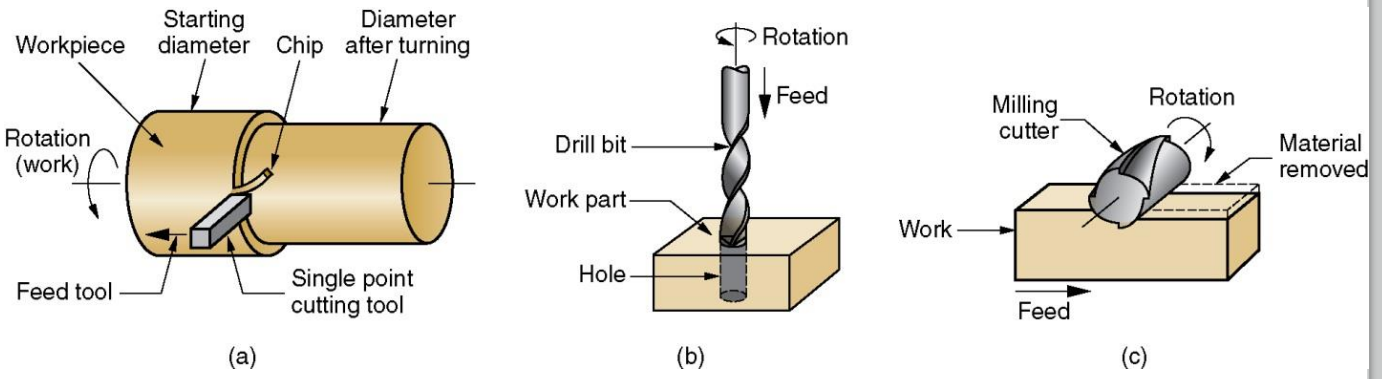

Welding

Welding is an operation whereby two or more parts are united by means of heat or pressures or both.

Types of weld joints

(a)Butt joint,
(b)corner joint
(c)Lap joint
(d)tee joint,
(e)edge joint

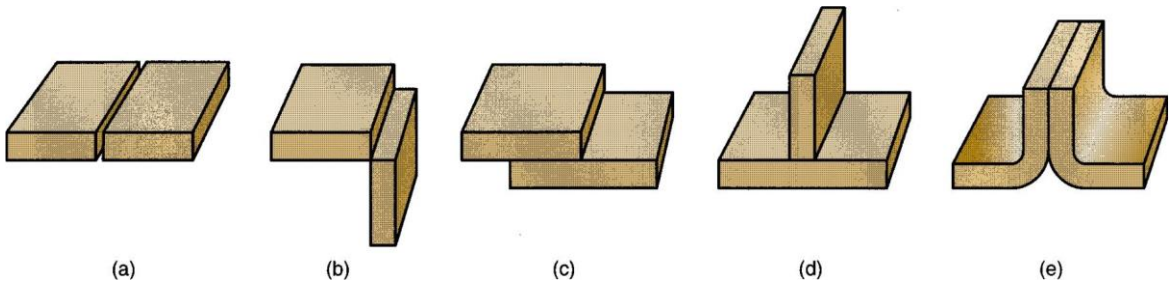

Types of Welds

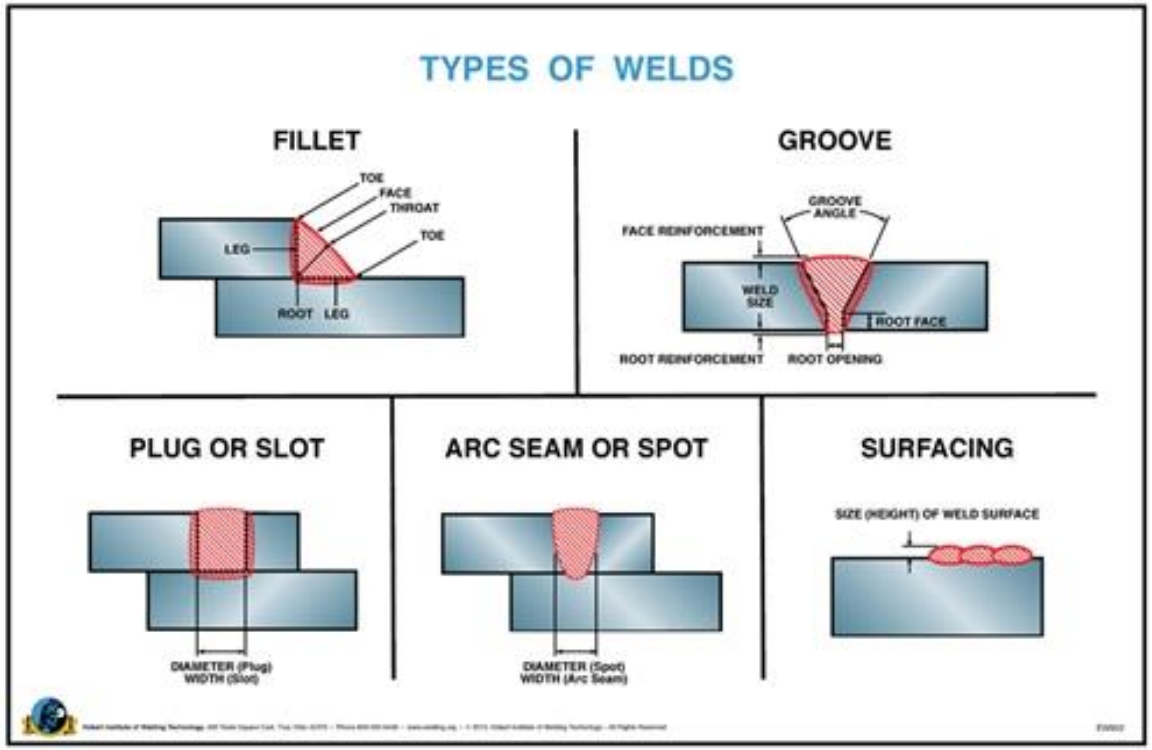

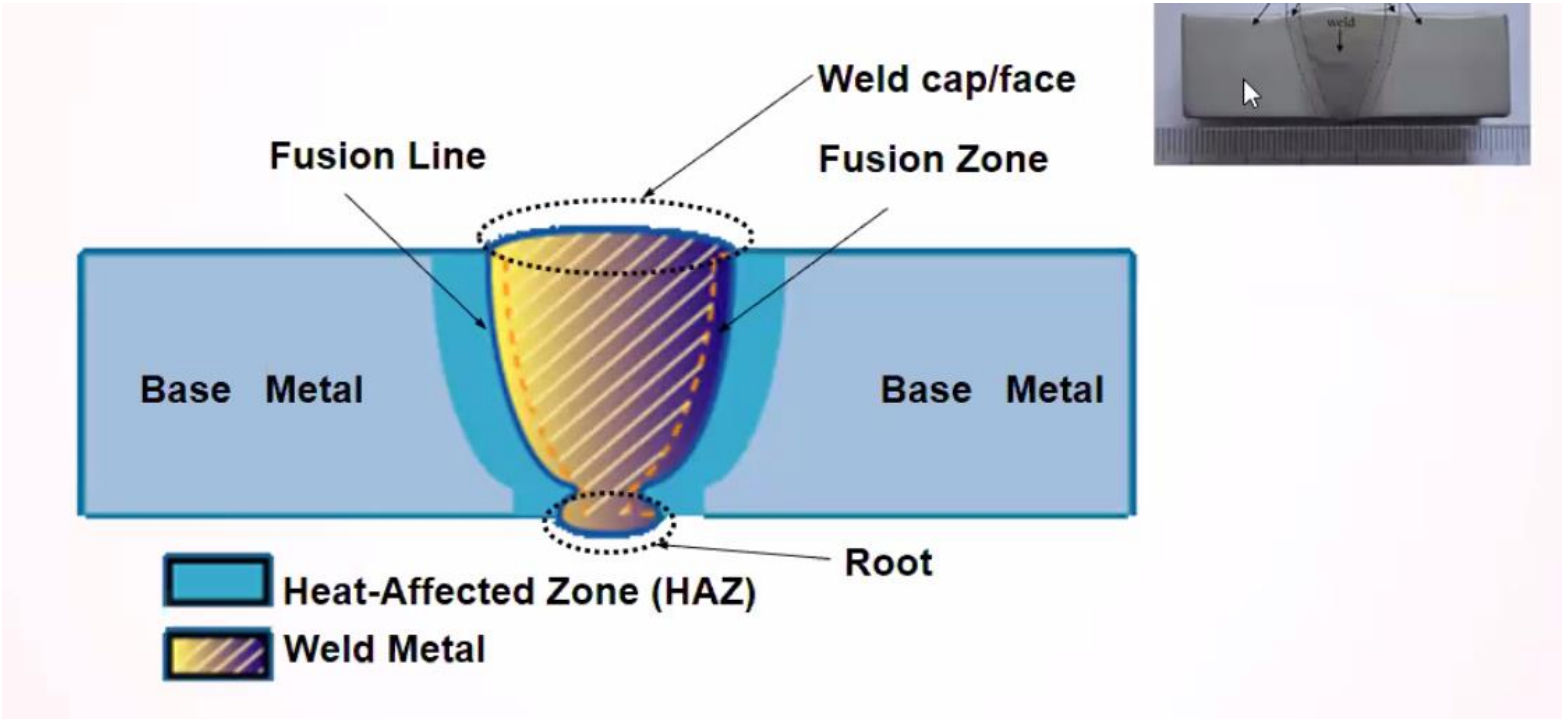
Weld cap/face
Fusion Line
Fusion Zone
Base Metal
Base Metal
Root
Heat-Affected Zone (HAZ)
Weld Metal

Weld Parts

Machine Design

What is the function of the bearing?

1. Support loads: Radial, Axial(thrust).
2. Reduce friction.

What are the different types of bearings?

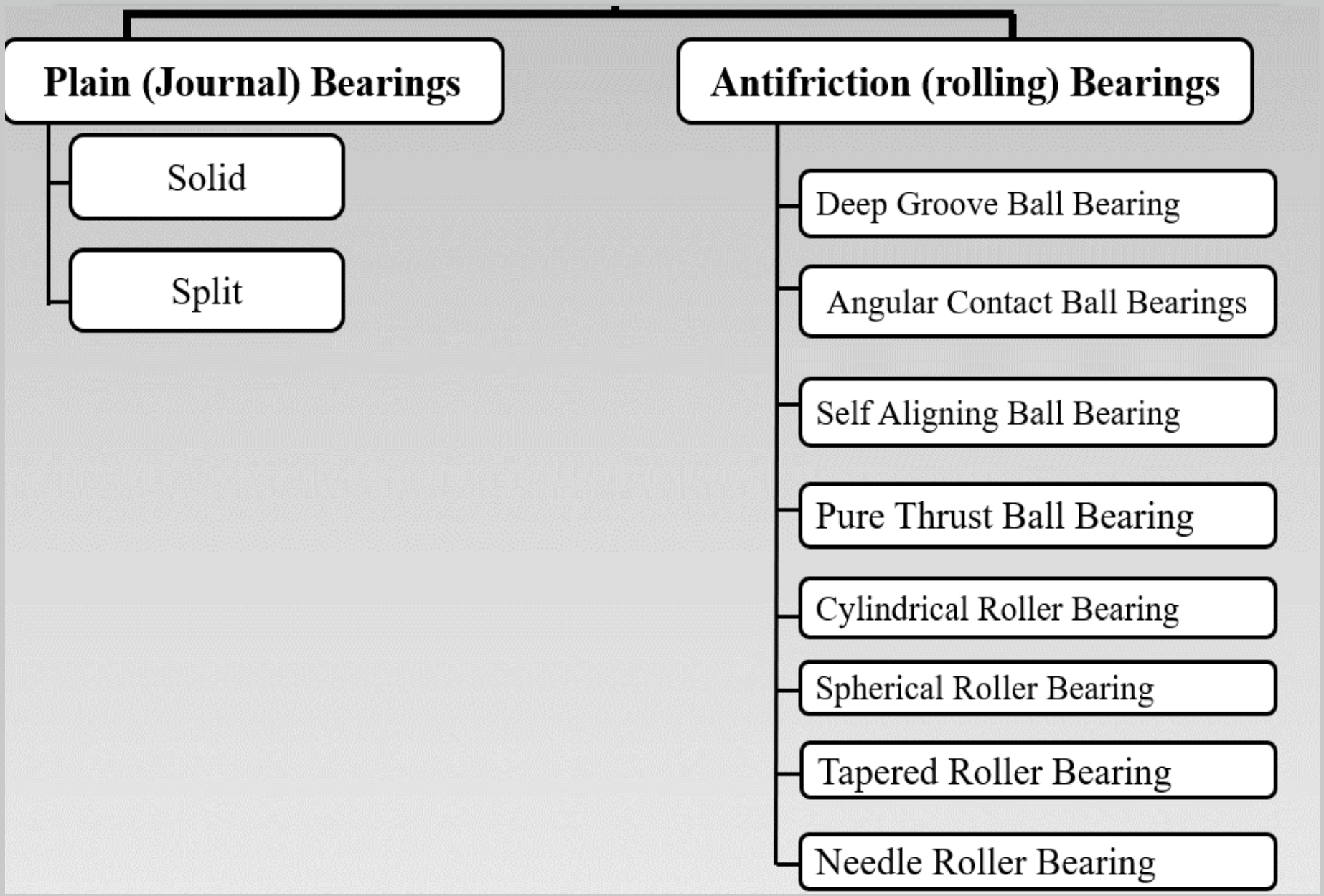

Journal bearings

- They work by sliding action
- **Types**: Solid and split types
- **Advantages**:
  - Can handle high loads
  - Quiet operation: because no rolling elements exist.
  - Require less space than antifriction bearings.
  - Low cost
- **Disadvantages**:
  - Limited to low-speed applications
  - Require precise alignment
  - Lubrication is essential for its performance.

Antifriction bearings

- **Parts:** inner ring, outer ring, rolling element, and retainer.
- They work by rolling action.
- **Advantages:**
  - Higher efficiency than plain bearings
  - Can handle high speeds
  - Can tolerate misalignment better than journal bearings
- **Bearing Types by rolling elements:**
  - Ball bearings
  - Cylindrical Roller Bearings
  - Taper Roller Bearings
  - Spherical Roller Bearings

Ball Bearings

Light radial load

Light axial (thrust) load

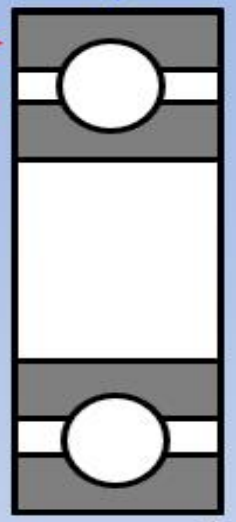

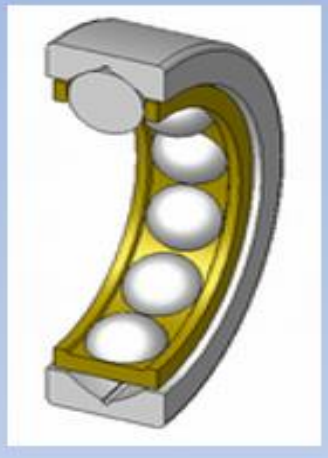

Deep groove ball bearing

Moderate radial load

Light axial load

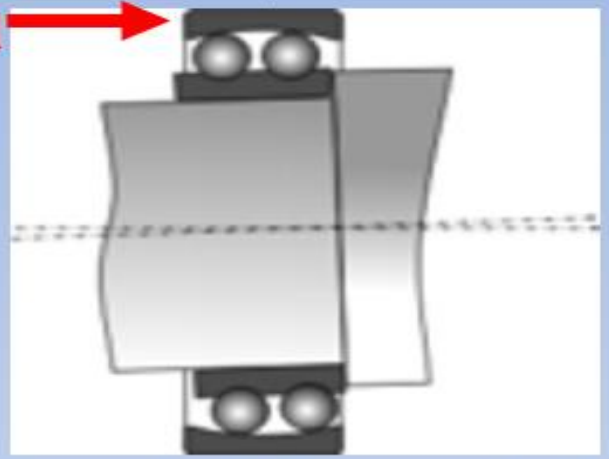

Self-aligning double row ball bearing

Moderate radial load

High axial load

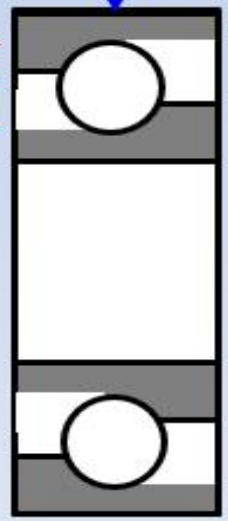

Angular contact ball bearing

Light radial load

High axial load

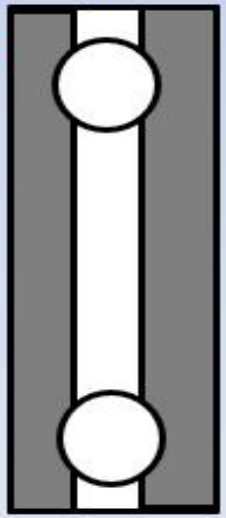

Single acting thrust ball bearing

Other Antifriction Bearings

Low axial load

High radial load

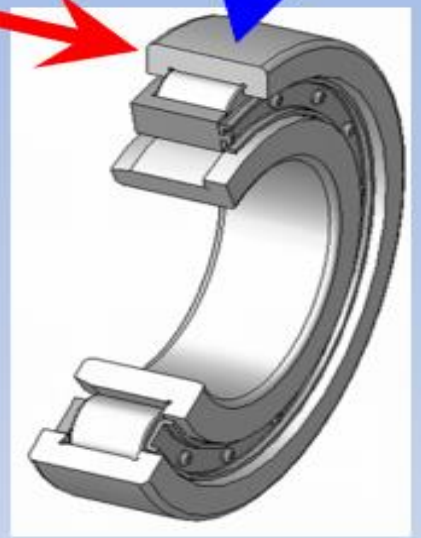

Cylindrical roller bearing

High radial load

Moderate axial load

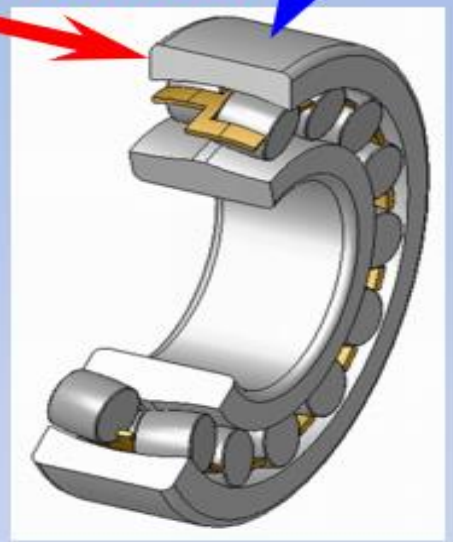

Spherical roller bearing

High radial load

High axial load

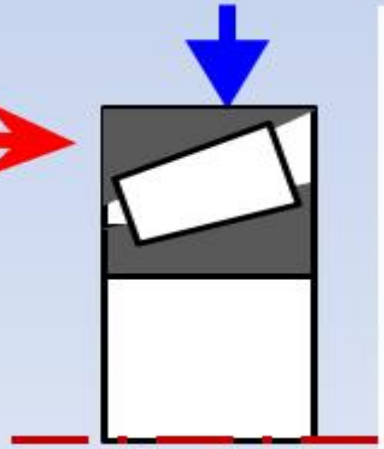

Tapered roller bearing

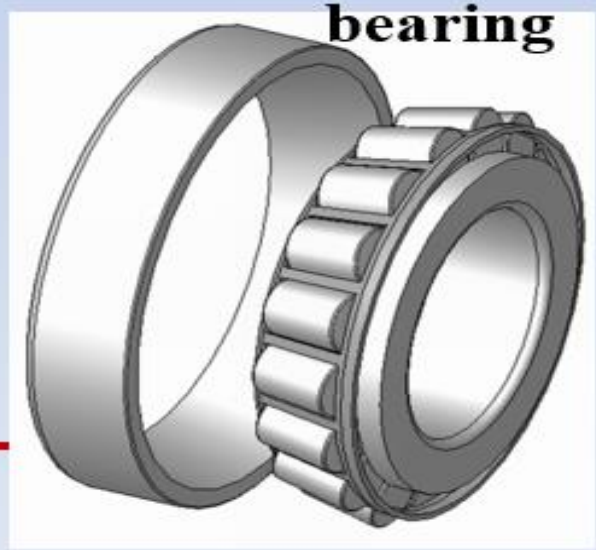

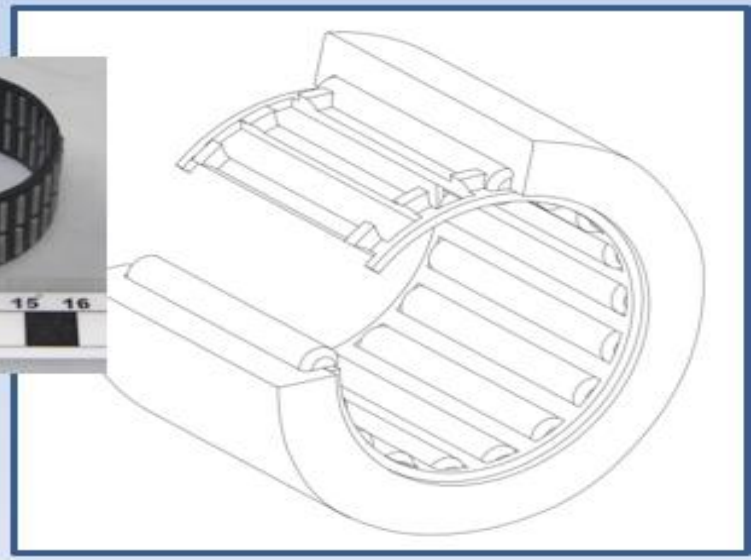

Needle roller bearing

Select Proper Bearings

- In selecting these types of bearings, the designer should take into consideration the following:
  - The available space
  - The **load** and its characteristics
  - The desired **life**
  - The required **speed**
  - The **cost**

Describe two main functions of gears

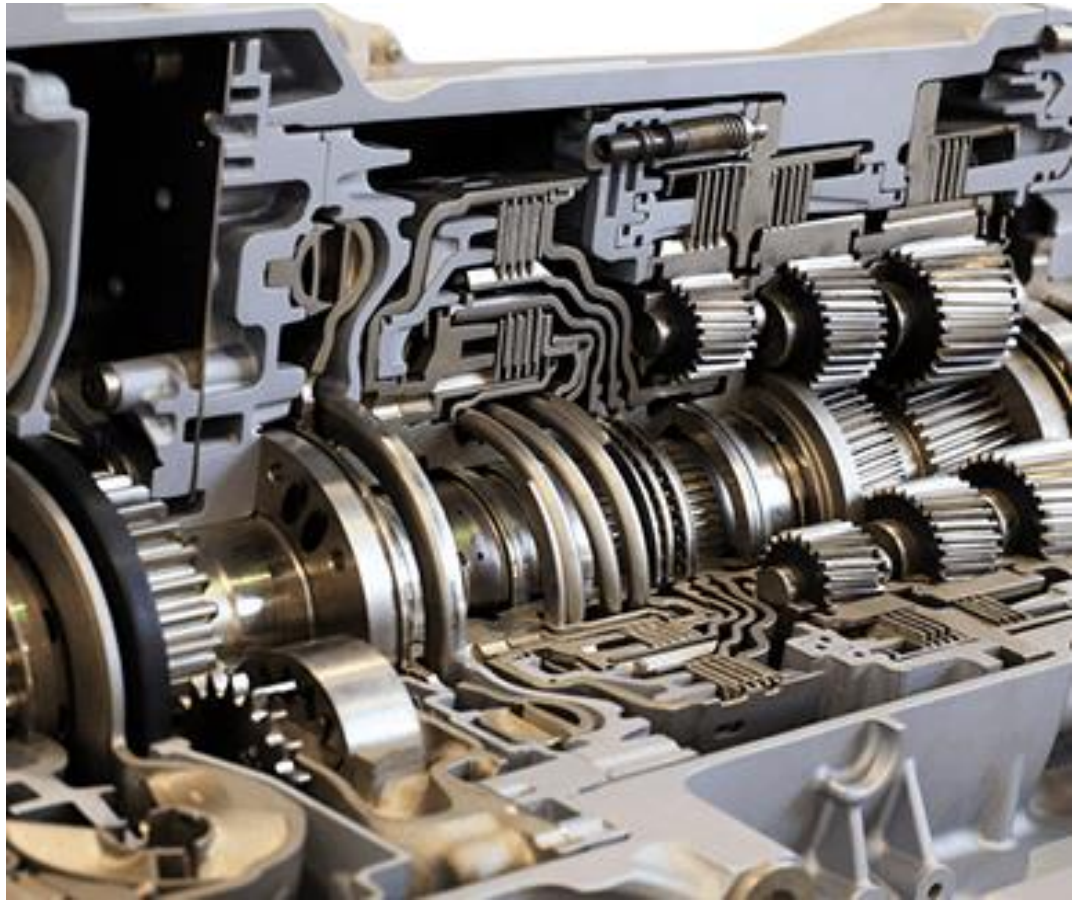

- A **gear** is a rotating machine part having cut teeth which mesh with another toothed part in order to transmit torque.

- Geared devices can:
  - change the **speed** of a power source.
  - change the **torque** of a power source.
  - change the **direction** of a power source.

Gear Types

Helical gears are used to transmit motion between parallel or nonparallel shafts.

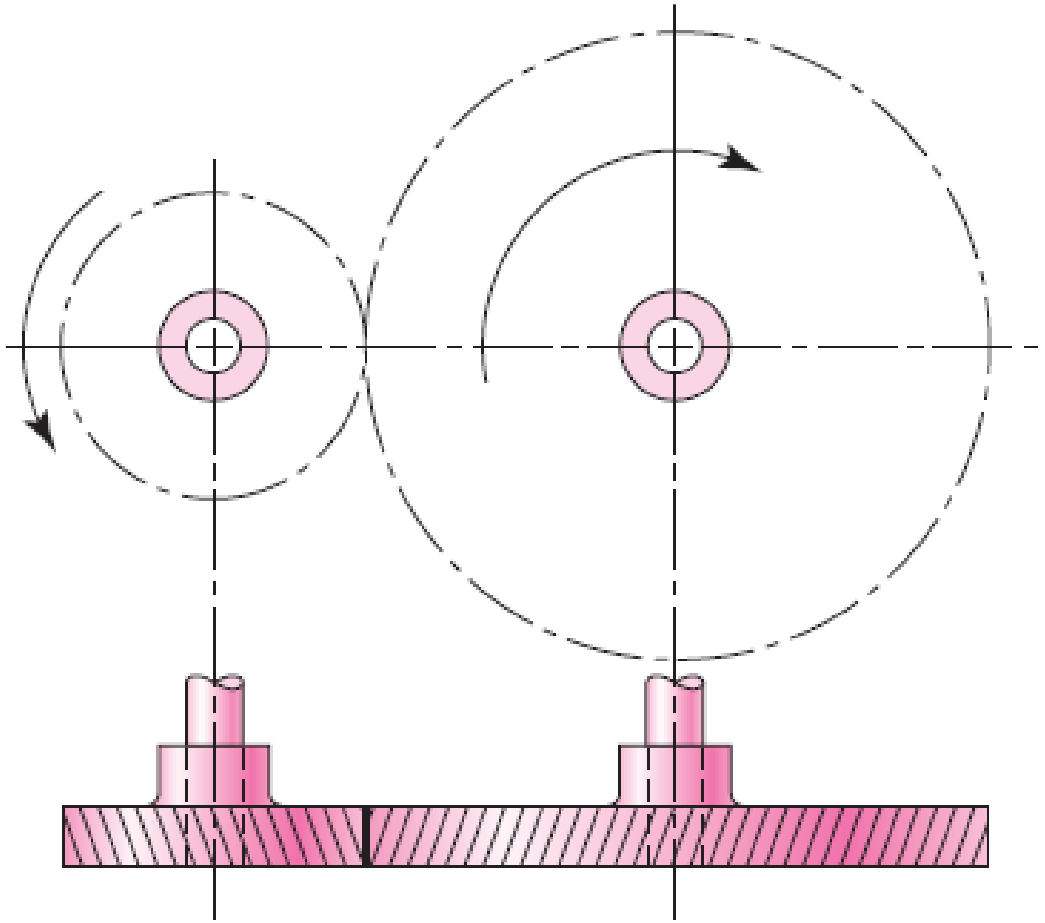

Gear Types

Spur gears are used to transmit rotary motion between parallel shafts

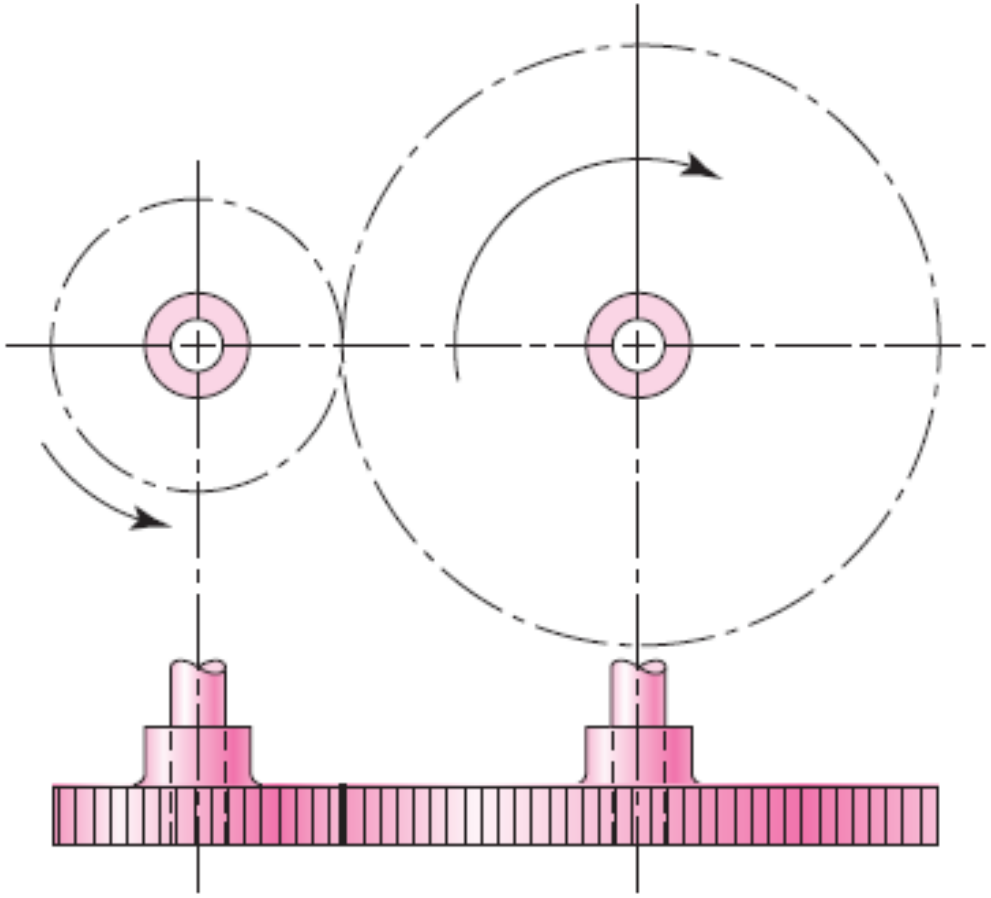

Gear Types

Bevel gears are used to transmit rotary motion between intersecting shafts.

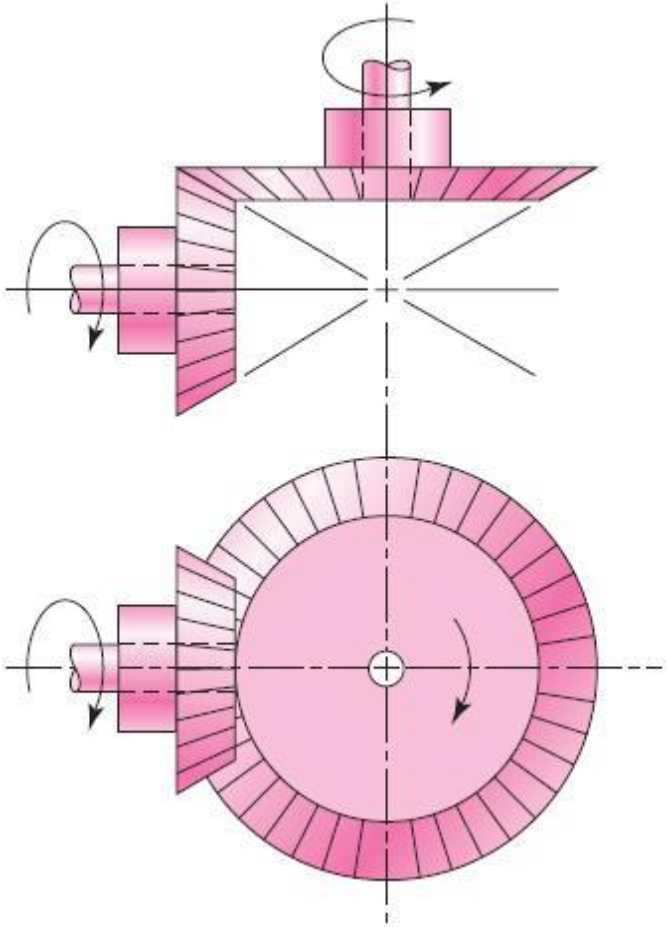

Gear Types

Worm gear sets are used to transmit rotary motion between nonparallel and non intersecting shafts.

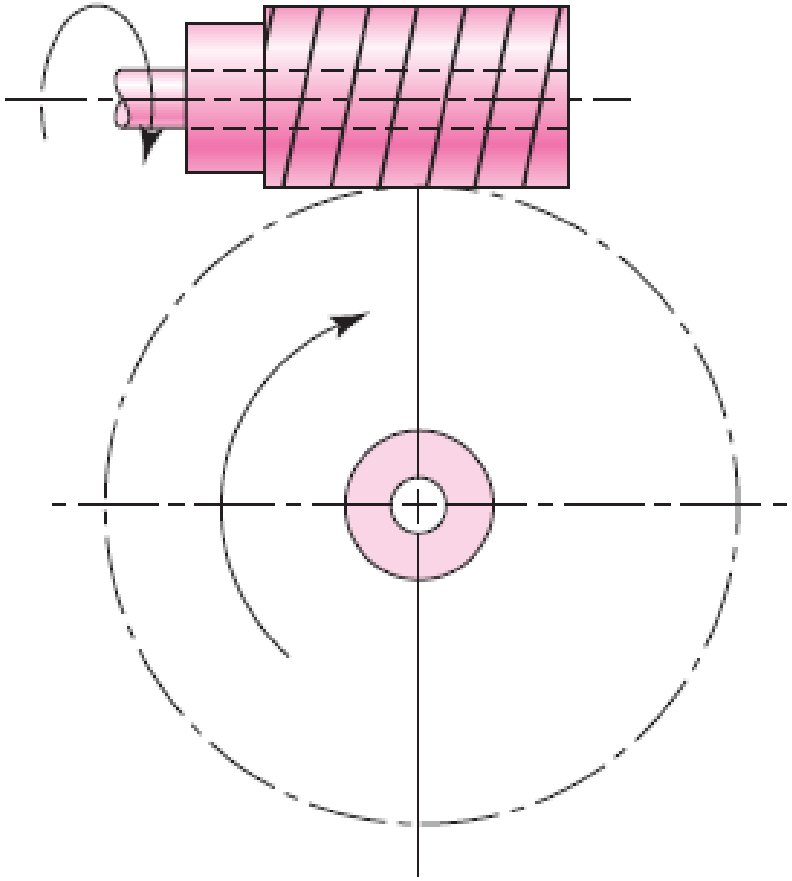

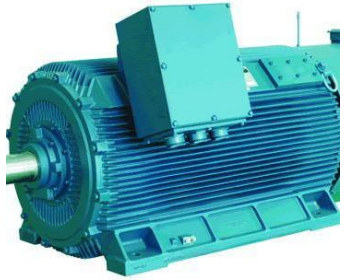

Electromechanical Devices

What is the difference between motor and generator?

BASIS	MOTOR	GENERATOR
Function	The Motor converts Electrical energy into Mechanical Energy	Generator converts Mechanical energy to Electrical energy.
Driven element	The Shaft of the motor is driven by the magnetic force developed between armature and field.	The Shaft is attached to the rotor and is driven by mechanical force.
Current	In a motor, the current is to be **supplied** to the armature windings.	In the generator, the current is **produced** in the armature windings.

Motor

- An **electric motor** is an electrical machine that converts electrical energy into mechanical energy.
- Most electric motors operate through the interaction between the motor's magnetic field and electric current in a wire winding to generate force in the form of torque applied on the motor's shaft.
- Electric motors may be classified into:
  - DC power motors.
  - Single-phase AC power motors.
  - Three-phase AC power motors.

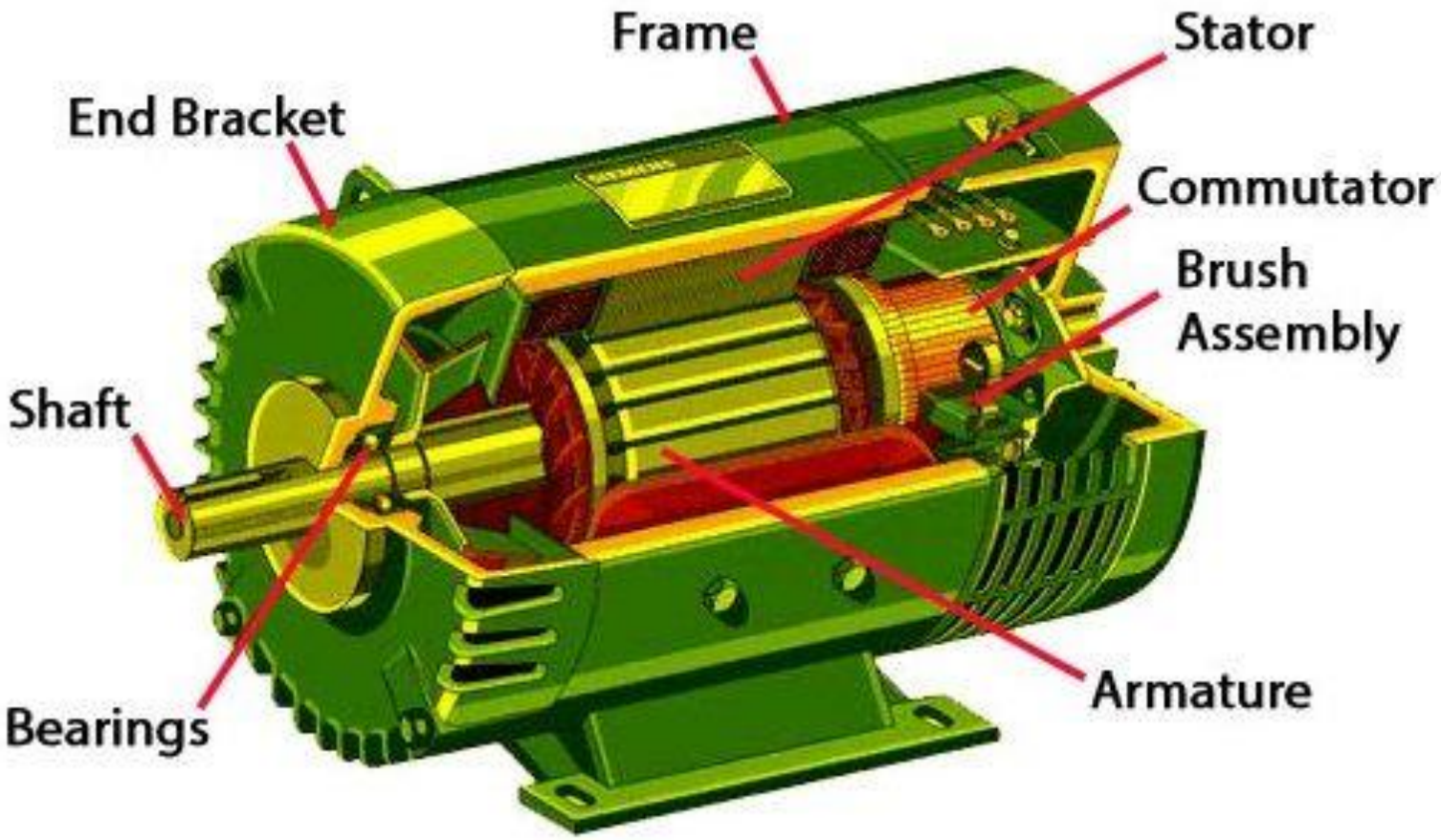

Electric Motor / Generator Components

Rotor

- The rotor is a moving component of an electromagnetic system in the electric motor, electric generator, or alternator.
- Its rotation is due to the interaction between the windings and magnetic fields which produces a torque around the rotor's axis.

- The magnet in the stator can be permanent or electromagnet.

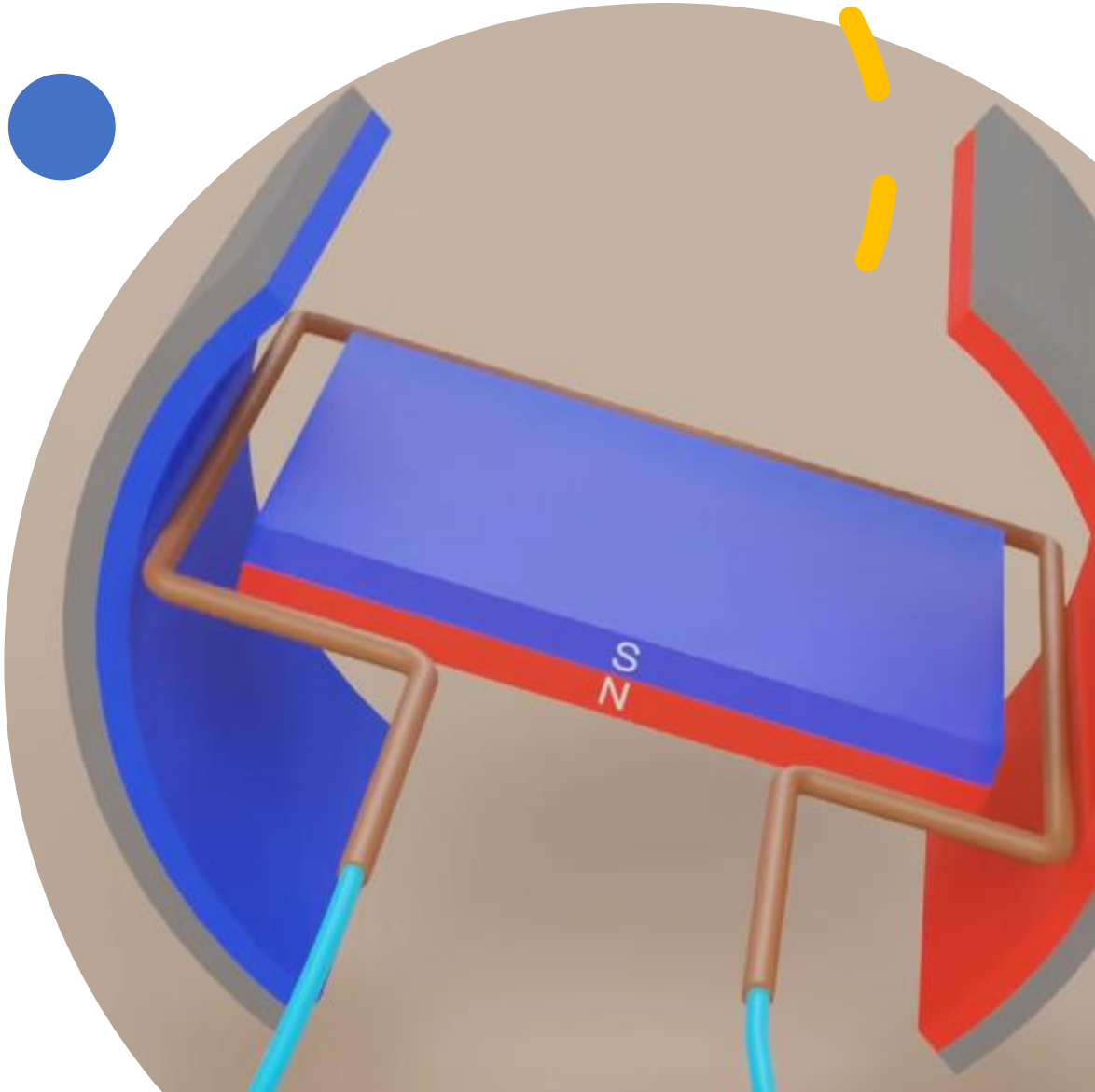

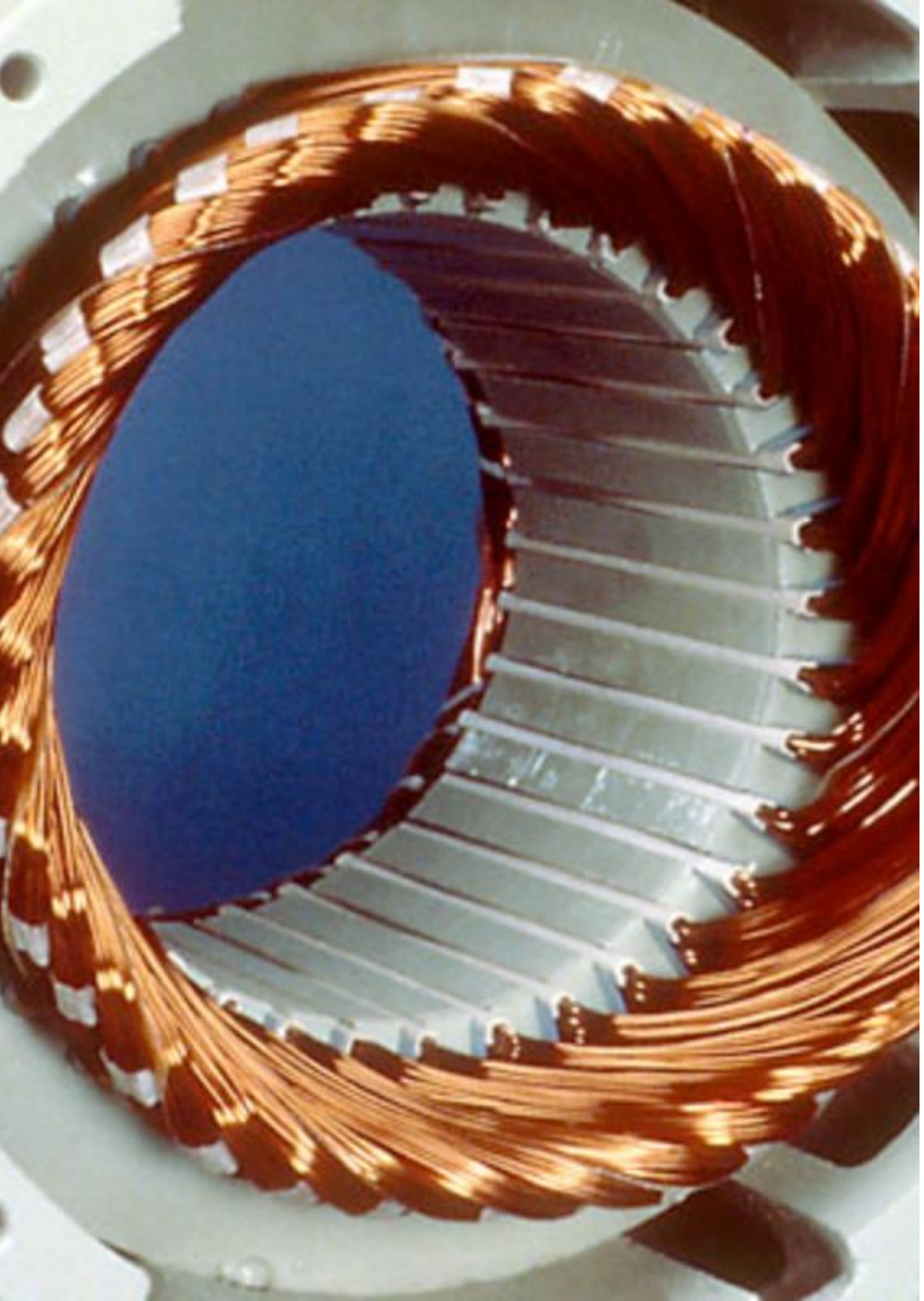

Stator

- The stator is the stationary part of the motor's electromagnetic circuit and usually consists of either **permanent magnets or field windings** .
- The stator core is made up of many thin metal sheets, called laminations. Laminations are used to reduce energy losses that would result if a solid core were used.

Armature

- **Armature** is a metal loop. The actual armature consist of many loops to ensure that there will be a continuous spinning motion on the motor.
- Each loop in the armature are made of made of many wires to have stronger electromagnets in the motor, which means faster spinning.

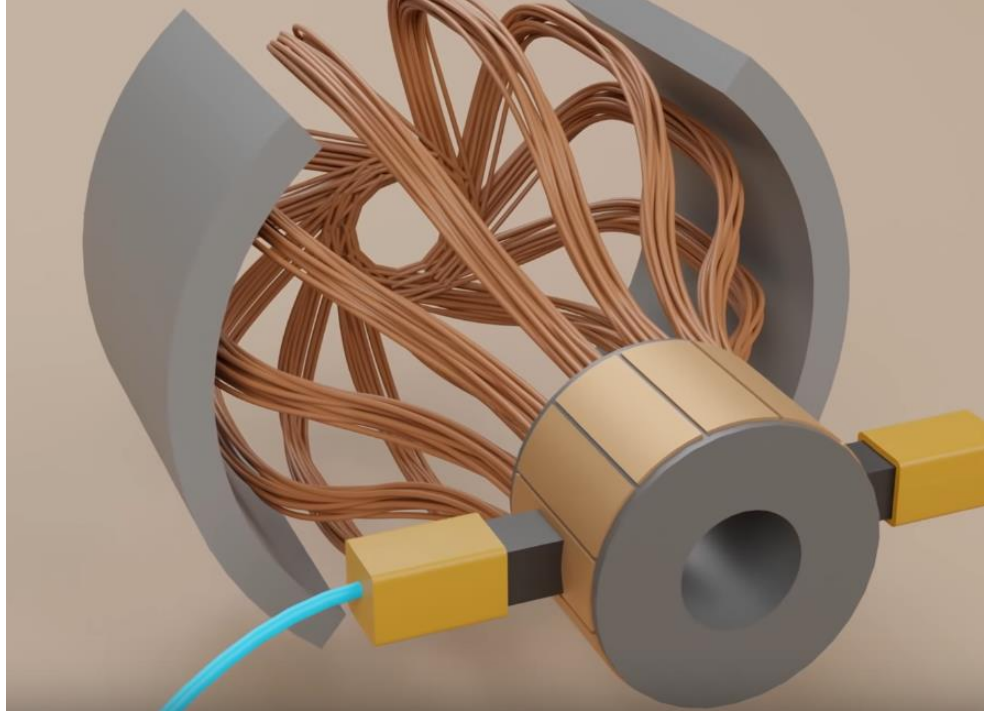

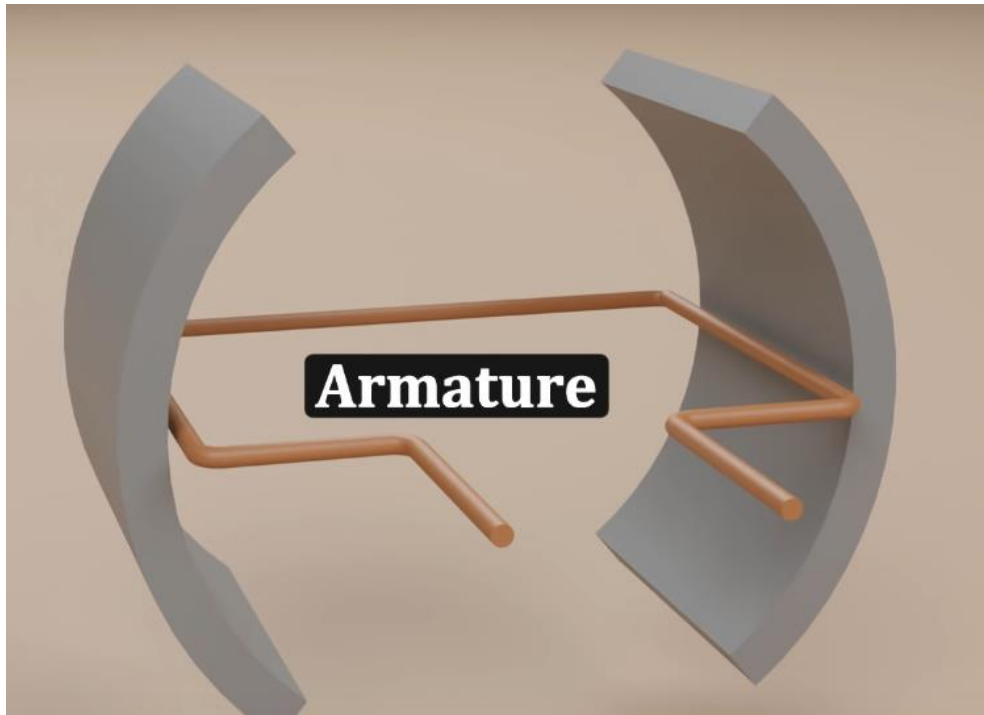

Commutator

- A commutator is a ring with gaps in the opposite sides.
- The commutator will spin along with the armature.
- A commutator is a mechanism used to switch the polarity of the voltage thus switching the polarity of the electromagnet of the armature. Which will cause the armature to keep spinning.

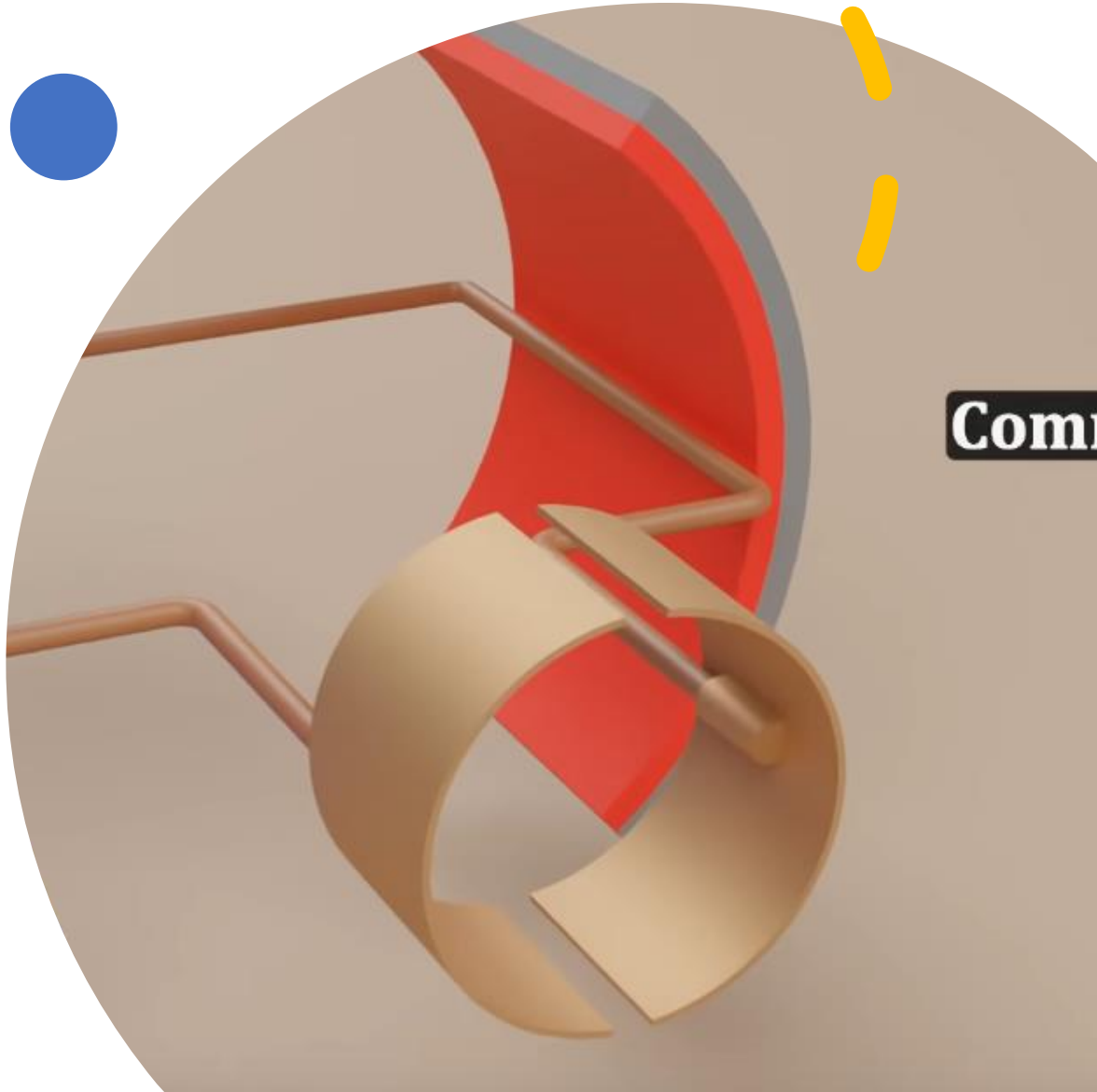

Brushes

- A brush is an electrical contact which conducts current between stationary wires and the rotating shaft.
- And they are spring loaded so that they always maintain contact.
- The brushes will switch contact to the other side of the commutator ring.

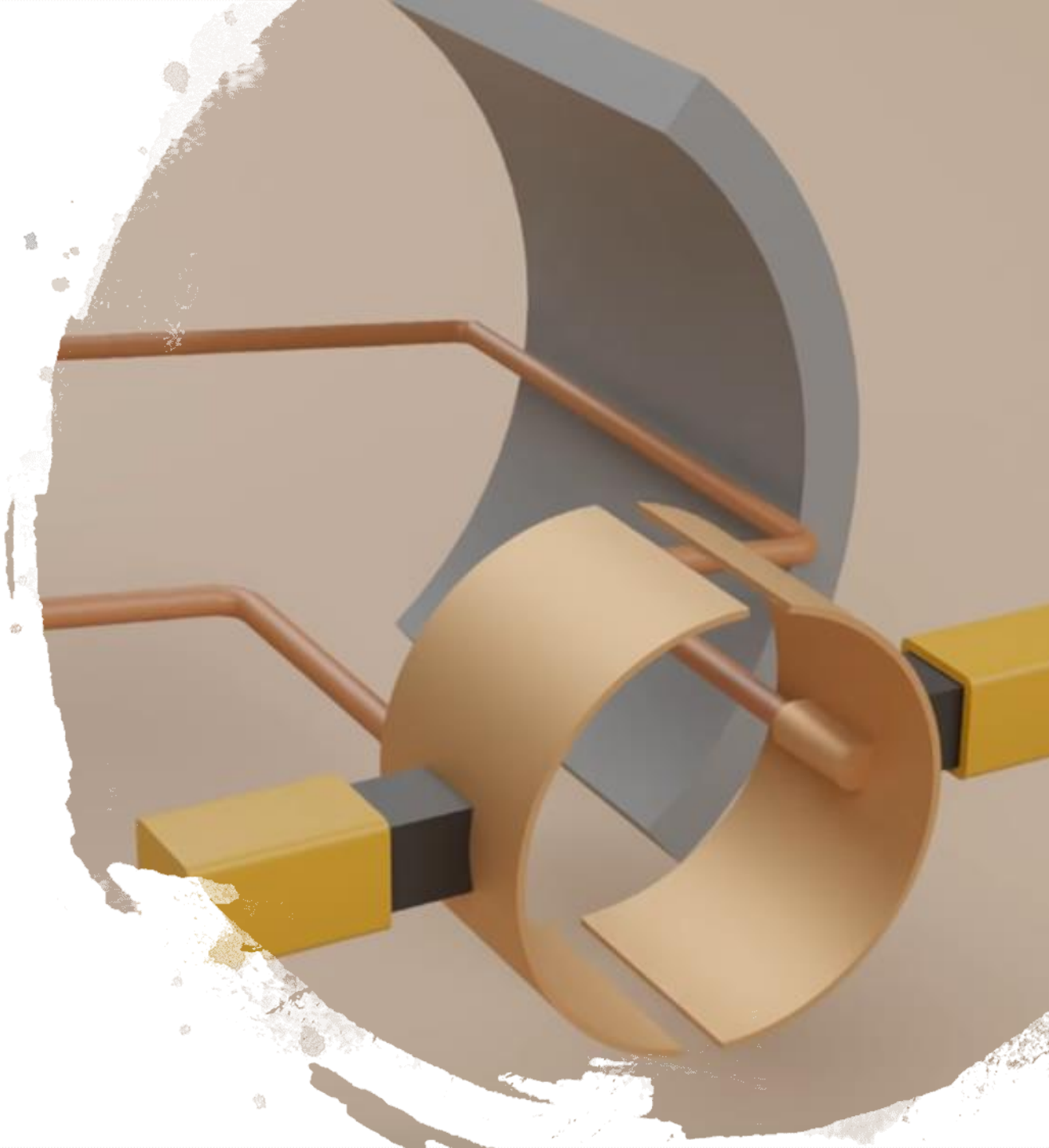

Explain the working principle of the generators?

- Generator is a device that converts mechanical energy into electrical power.
- Sources of mechanical energy include steam turbines, gas turbines, water turbines, internal combustion engines, wind turbines and even hand cranks.

Electrical Transformers

- Electrical transformers are machines that transfer electricity from one circuit to another with changing voltage and current levels.
- Transformers are manufactured to be **step up** or **step-down** transformers, and these are used to increase or decrease the voltage simply by using a different number of turns within the coil on a secondary side.

Where do we need Electrical Transformers?

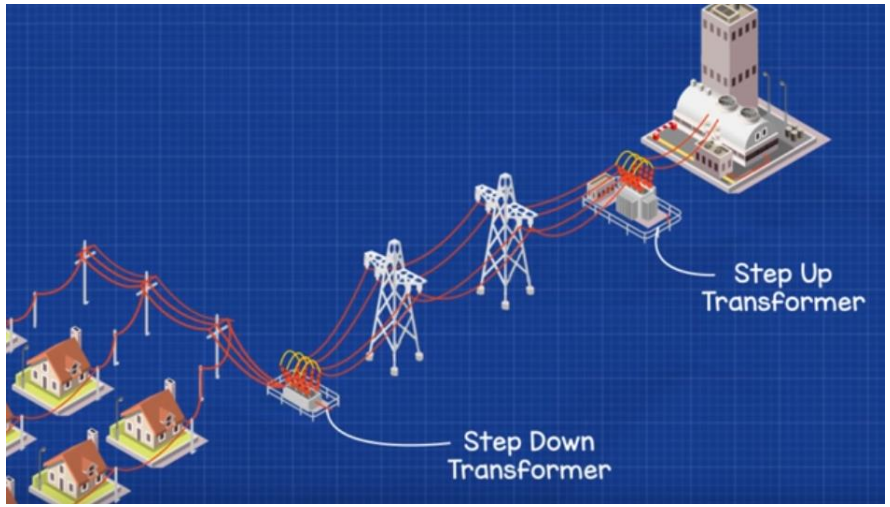

- To transport the electricity from the power station to a city.
- The power station will use a step-up transformer to increase the voltage and reduce the current, as this will **reduce the losses** for the long transmission cables.
- Then, once it reaches a city, this will need to be reduced to make it **safe and usable** by buildings and homes, so there will need to be a step-down transformer.

How we produce electricity in Saudi Arabia?

- Natural gas fuel and oil fuel can be used as heating source in boilers in power plant to produce steam to be used in steam turbines.
- Diesel is used in Diesel generators.

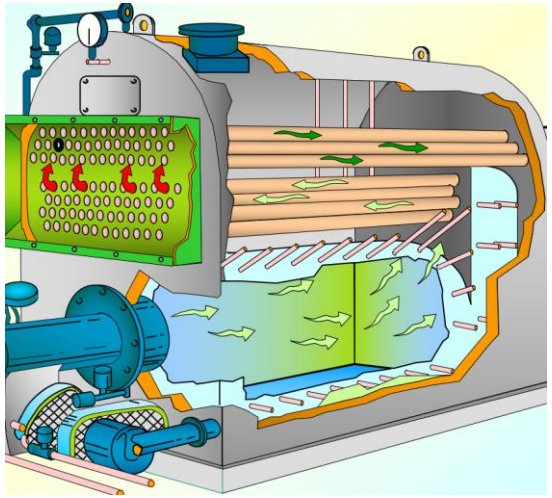

Saudi power generation share by fuel, 2016	
Natural gas	50.7%
Crude oil	24.2%
Heavy fuel oil	16.5%
Diesel	8.6%
Renewables (solar)	0.04%

General Questions

What is mechanical engineering (In a simple way)?

What are the applications of mechanical engineering in day-to-day life?

Why did you choose mechanical engineering as your major?

What did you do during your internship?

What skills did you gain during your internship?

What was your senior design project about?

What was your role in the senior design project ?