Boiler Water Quality Requirements and Associated Steam Quality for Industrial/Commercial and Institutional Boilers

American Boiler Manufacturers Association

ABMA …. representing the best of the boiler industry

Boiler Water Quality Requirements and Associated Steam Quality for Industrial/Commercial and Institutional Boilers

2005

American Boiler Manufacturers Association
8221 Old Courthouse Road, Suite 207
Vienna, Virginia 22182
http://www.abma.com

Copyright © 2005

By

American Boiler Manufacturers Association
All Rights Reserved

TABLE OF CONTENTS

CHAPTER	DESCRIPTION	PAGE
	INTRODUCTION	6
	BACKGROUND	7
	SAFETY PRECAUTIONS AND WARNINGS	8
I	INSTALLATION AND START-UP	9
	Preface	9
	Installation and Start-up	9
	Operating Manuals	9
	Pre-start System & Component Checkout	9
	Boil Out of New Unit	10
	System Clean Out	12
	Steam Systems	12
	Hot Water Systems	14
	Arrangements for Flushing Hot Water Heating Systems	15
	How to Clean a Hot Water Heating System	17
	Boiler Operation after Cleaning	17
	Installation and Start-up Checklist	17
	Temporary Use	18
	Operator Skills/Responsibilities	18
	Make-Up for Hot Water Boilers	19
	Chemical and Mechanical Cleaning	19
II	FEEDWATER SYSTEMS	20
	Feedwater System	20
	Softeners	20
	Dealkalizers	20
	Deaerators	20
	Condensate Receivers	21
	Demineralizers	21
	Reverse Osmosis Equipment	21
	Internal Treatment Equipment	21
	Filters	21
	Installation of Chemical Treatment Equipment	22
	Maintenance	22
	Feedwater Requirements for Firetube Boilers	23
	Feedwater Requirements for Watertube Boilers	23

III	TESTING	24
	General	24
	Steam Boiler Systems	25
	Make-up	25
	Feedwater	25
	Boiler Water	25
	Condensate	26
	Hot Water Boiler Systems	27
	Make-up	27
	Boiler Water	27
IV	CONDENSATE SYSTEM PROTECTION	29
	Causes of Corrosion	29
	Carbon Dioxide	29
	Oxygen	29
	Treatment	29
	Neutralizing Amines	29
	Filming Amines	30
	Organic Oxygen Scavengers	30
	Monitoring	30
V	IDLE BOILER CARE AND LAY-UP	32
	General	32
	Taking Boilers Off-Line	32
	Pre-shutdown Precautions	32
	Wash Down	33
	Steam Boilers	33
	Short Term (30 days), Wet Lay-Up Steam Boilers	33
	Long Term (over 30 days), Dry Lay-Up Steam Boilers	36
	Desiccant Method	36
	Nitrogen Blanket Method	37
	Safety Precaution	37
	Returning Idle Steam Boilers to Service	37
	After Wet Lay-Up	37
	After Dry Lay-Up	38
	Lay-Up of a Hot Water Boiler	38
	Wet Lay-Up	38
	Long Term Dry Lay-Up of a Hot Water Boiler	39
	Returning Idle Hot Water Boiler to Service	39
	After Wet Lay-Up	39
	After Dry Lay-Up	40
	Safety Precautions	40

Fireside Lay-Up 40
Hot Lay-Up Boiler Idle 41
Cold Lay-Up 41

VI STEAM BOILER BLOW-OFF AND BLOWDOWN SYSTEMS 42

General 42
Bottom Blow-Off Systems 42
Surface Blowdown Systems 43
Bottom Blow-Off and Surface Blowdown Systems 44

VII DAILY BOILER LOG 45

VIII STEAM QUALITY 46

Boiler Water and Feedwater 46
Recommended Boiler Water Limits 47
Carryover 49
Boiler Service 49
Pressure 50
Superheated Steam 50
Sampling Procedure 50
Relation to Boiler Water 50
TABLE 3 – Recommended Firetube Boiler Water Concentration 51
TABLE 4 – Recommended Watertube Boiler Water Concentration 52
Daily Boiler Water Log 53

IX ELECTRIC BOILERS – SPECIAL CONSIDERATIONS FOR WATER TREATMENT 57

General 57
Electrode Boilers 57
Types of Treatment 58
Installation and Start-Up 59

X DEFINITIONS AND GLOSSARY 61

REFERENCES 73

INTRODUCTION

The purpose of this publication is to acquaint engineers, purchasers and operators of industrial, commercial and institutional (ICI) boilers with ABMA's judgment as to the relationship between boiler water quality and boiler performance. This document is published for general guidance as a supplement to detailed operating manuals supplied by the equipment manufacturers. It should also be noted that the information presented is directed to steel boiler designs, as opposed to cast iron sectional or copper finned tube boilers. Furthermore Utility Boilers and Combined Cycle Boilers, which require extremely close control of water quality and steam purity, are not the topic of this document.

This new document combines two previous ABMA Guideline documents, namely “Boiler Water Requirements and Associated Steam Purity for Commercial Boilers” (1998), and “Boiler Water Limits and Achievable Steam Purity for Watertube Boilers”, (1995).

The document discusses the effect of various feedwater and condensate systems on the boiler operation. It also provides information on boiler water and steam testing as well as system care and maintenance.

It is recognized that specific boiler usage and water treatment will vary and may require values different from these recommendations. Boiler users therefore, need to define limits, equipment and operating parameters for their particular application.

These recommendations are for information only. Everyone is free to accept or reject the conclusions of these suggestions as their own judgment warrants in all aspects of the conduct of their business.

The ABMA does not represent or warrant that any level of steam purity depicted will be achieved by any particular boiler or boilers.

BACKGROUND

The American Boiler Manufacturers Association (ABMA) was established in 1888 as an association of commercial, industrial and utility boiler manufacturers and manufacturers of fuel burning systems.

In 1939, recognizing the need for information on boiler water and steam conditions, the association published boiler water conditions and steam purity recommendations. This work was reaffirmed and published in 1942, 1947 and 1954. A major revision was published in 1958 and reaffirmed in 1964. Since that time, there has been significant improvement in water treatment and the analytical techniques for measuring water and steam purity. In addition newer and more sophisticated plant designs require improved water and steam purity. Due to these developments and the fact that many users were unacquainted with the earlier work, the association recognized the need to update and republish these recommendations in 1982. That version represented significant change and was intended to reflect the current state of the art for steam generator water requirements. The Watertube version was further updated in 1995 to reflect more rigorous steam purity requirements for modern turbines and other applications requiring exceptionally high steam purity. The most recent version of the commercial boiler document was published in 1998. This latest combined version of the two water quality documents represents an updating to reflect current requirements for steam purity and water quality, particularly in view of the current interest in combined heat and power systems. The various product and technical groups within ABMA have reviewed this revised document prior to its 2005 republishing.

SAFETY PRECAUTIONS AND WARNINGS

1. Before commencing operations, follow the Boiler Manufacturers Installation and Start-Up Checklist, or if this is not available, the Installation and Start-up Checklist on page 17.

2. When dissolving chemicals, the following should be observed:
   (a) Use of suitable face mask, goggles, protective gloves and garments is required when handling or mixing caustic chemicals.
   (b) Do not permit the dry chemicals or solution to come in contact with skin or clothing.
   (c) Always follow the safety precautions on the container's labeling.
   (d) Warm (80 to 100°F) water should be put into a suitable container.
   (e) Slowly introduce dry chemical into water, stirring at all times until the chemical is completely dissolved.
   (f) The chemical must be added slowly and in small amounts to prevent excessive heat and turbulence.

3. Boil out under pressure is not recommended for the class of boilers covered by this document. If units must be boiled out under pressure competent supervision must be provided.

4. If the boiler is not to be operated within 24 hours after boil out see the requirements of Chapter V on Lay-Up.

5. In existing systems the gradual introductions of filming amines is recommended to avoid the rapid removal of corrosion products. Fast removal of rust will cause plugging of traps and strainers (see page 30).

6. Boilers laid up dry shall be tagged with information to indicate the unit must not be operated until moisture-absorbing chemicals are removed and the boiler refilled (see also Chapter V).

7. The use of nitrogen for blanketing is recommended in many of the lay-up procedures. Nitrogen will not support life; therefore, it is essential that proper precautions be taken before such equipment is entered for inspection or other purposes. These precautions shall include disconnecting of the nitrogen supply line, thorough purging and venting of the equipment with air and testing for oxygen levels inside the equipment. Appropriate caution signs shall be posted around the equipment to alert all personnel that nitrogen blanketing is in use.

8. Obtain **MATERIAL SAFETY DATA SHEETS** from the supplier for **ALL CHEMICALS USED** for water conditioning, cleaning and/or lay-up. Read and follow the recommended handling procedures and precautions. Be aware of any potential health hazards from the chemicals being used.

CHAPTER 1

INSTALLATION AND START-UP

PREFACE

Before an attempt is made to place a boiler into operation, the person responsible or in charge of the boiler room should be familiar with this section.

Perhaps the most important part of start-up is the assurance of proper equipment for pretreatment (external treatment) of any make-up either for steam or hot water. A pretreatment system must be operational before any attempt is made to start a boiler.

One should ascertain if the installation is permanent, will be utilized for temporary heat, or if additional segments will be cut in at later construction schedules. This information should be properly noted and schedules set, which will take into, account any changes to the pretreatment program.

Following the recommendations in this section should provide the boiler owner with many years of trouble free operation.

INSTALLATION AND START -UP

Before a boiler is placed into operation, it is important that the system and its components be checked for completeness and that operators have an understanding of component and system operation.

Operating Manuals

All manufacturers of boilers supply operating instruction manuals with their equipment. It is important that the operating personnel carefully read and understand the contents of the manual and follow the procedures in the manual. Particular attention should be given to those sections pertaining to the safety precautions.

Manuals for other equipment in the boiler room should be available and understood.

Pre-start System & Component Checkout

After reviewing the operating manual, it is recommended that the boiler and system be checked for completeness of installation before any activation of the boiler. The following procedure should be observed:

1. The unit should be thoroughly examined on the waterside and the fireside to make sure that no foreign material is present.

2. All piping on the boiler, such as blowdown/drain piping, steam/water system piping, feedwater piping, should be checked to assure that the piping has been properly installed so that there is no danger to any individual. Items such as gages, gage glasses, and controls should be checked for any evidence of damage or breaking either due to shipment, or working around the equipment after it has been placed in position.

3. Electrical equipment, such as motors, should be operated wherever possible to assure proper rotation of items such as pumps, blowers, and air compressors. Items such as solenoid valves, interlocks, motorized valves, and limit switches should be checked wherever possible to assure they are operating properly.

4. All fuel lines should be internally cleaned and checked per the equipment manufacturers and local code requirements.

5. Ventilation and combustion air supply should be as recommended by local authorities and the equipment manufacturer.

6. For steam boilers, pretreatment and water treating equipment should be checked for its function and proper piping connections; refer to chapter on Feedwater Systems (see page 20).

7. For hot water boilers refer to section "Make-up for Hot Water Boilers" for further elaboration on system checkout (see page 19).

8. System piping should be verified for completeness. Refer to section "Temporary Use" for further comment (see page 18).

When the system has been checked the boiler and piping are now ready for boil out or clean out.

Boil Out of New Unit

The internal surfaces of a newly installed boiler will have oil, grease or other protective coatings used in manufacturing. Such coatings must be removed since these coatings lower the heat transfer rate and could lead to overheating of a tube and reduce unit operating efficiency. However, before boiling out procedures may begin, the burner should be ready for firing. The operator must be familiar with the procedure outlined in the boiler operating instruction manual.

Your water consultant or water treating company will be able to recommend a cleaning or boil out procedure. In the event such service is unavailable or as yet not selected, the following is suggested.

Suggested procedure for boil out prior to initial operation:

1. Trisodium phosphate and caustic soda are the suggested chemicals for cleaning of newly installed boilers. The quantities will vary according to conditions, but an amount of

one pound of each chemical per 50 gallons of water is suggested. Refer to boiler manufacturer's manual for boiler water capacity.

2. When dissolving chemicals, the following should be observed:

(a) Use of suitable facemask, goggles, protective gloves and garments is required when handling or mixing caustic chemicals.
(b) Do not permit the dry chemical or solution to come in contact with skin or clothing.
(c) Always follow the safety precautions on the container's labeling, and be familiar with the contents of the Material Safety Data Sheets.
(d) Warm (80 to 100°F) water should be put into a suitable container.
(e) Slowly introduce the dry chemical into the water, stirring at all times until the chemical is completely dissolved.
(f) The chemical must be added slowly and in small amounts to prevent excessive heat and turbulence.

3. Before introducing the solution into the boiler, an overflow pipe should be attached to one of the top boiler openings and routed to a safe point of discharge.

CAUTION: Boiling out under pressure is not recommended for this class of boiler. If the units must be boiled out under pressure competent supervision must be provided.

4. Water relief valves and steam safety valves must be removed before adding the boil out solution so that neither the solution nor surface contaminants will settle upon the valve seats. Use care in removing and reinstalling the valves.

5. All valves in the piping to or from the system must be closed to prevent the boil out solution from getting into the system.

6. Gage glasses must be protected from contact with the boil out chemicals during procedure.

7. Fill pressure vessel with clean water until top of the tubes in a firetube/firebox boiler are covered or in a watertube type unit the tube openings in the upper drum are covered. Add the cleaning solution and then fill to the top of the pressure vessel. The temperature of the water used in this initial fill should be at ambient temperature and softened.

8. After filling, the boiler should then be fired intermittently at a low rate sufficient to hold solution just at the boiling point. Boil the water for at least five hours. Do not produce steam pressure.

9. After the five-hour boil, begin to add a small amount of fresh water to create a slight overflow to carry off surface impurities. Continue boil and overflow until water clears. When water clears, shut burner off.

10. Let the boiler cool to 120°F or less, and then drain using caution that the water is discharged with safety.

11. Remove handhole covers and/or wash out opening and wash the waterside surfaces thoroughly using a high pressure water stream.

12. Inspect surfaces and if not clean, repeat the boil out.

13. After boil out, close all openings and reinstall safety or relief valves, gage glasses and other components. Fill the boiler with ambient treated water and fire unit at low fire until water temperature of at least 180°F is reached to drive off any dissolved gases.

14. Boiler is now ready for operation. CAUTION: If boiler is not to be operated within 24 hours see section on lay-up.

System Clean Out

Many clean boilers have been ruined with system contaminants such as pipe dope, cutting oil, metal shavings or chips and other debris associated with installation. If these contaminants are not removed, the debris will find its way back to the boiler.

Steam Systems

For steam systems, the boiler will need to be connected to the header utilizing the steam to purge the piping and push the debris out of the system. However, at this time, all condensate must be wasted until it runs clear and a water analysis indicates that it is free of contaminants. Steam trap strainers should be periodically opened and cleaned of any accumulation of debris.

During this period of system clean out, the make-up water should be properly treated and preheated. After the clean out, the condensate system must be reconnected.

For old or existing steam systems, the installation process may have jarred debris loose. After boil out of the new boiler, the condensate should be wasted until it is within proper guidelines. Check all steam trap strainers to assure their cleanliness.

GENERAL STEAM BOILER PIPING DIAGRAM

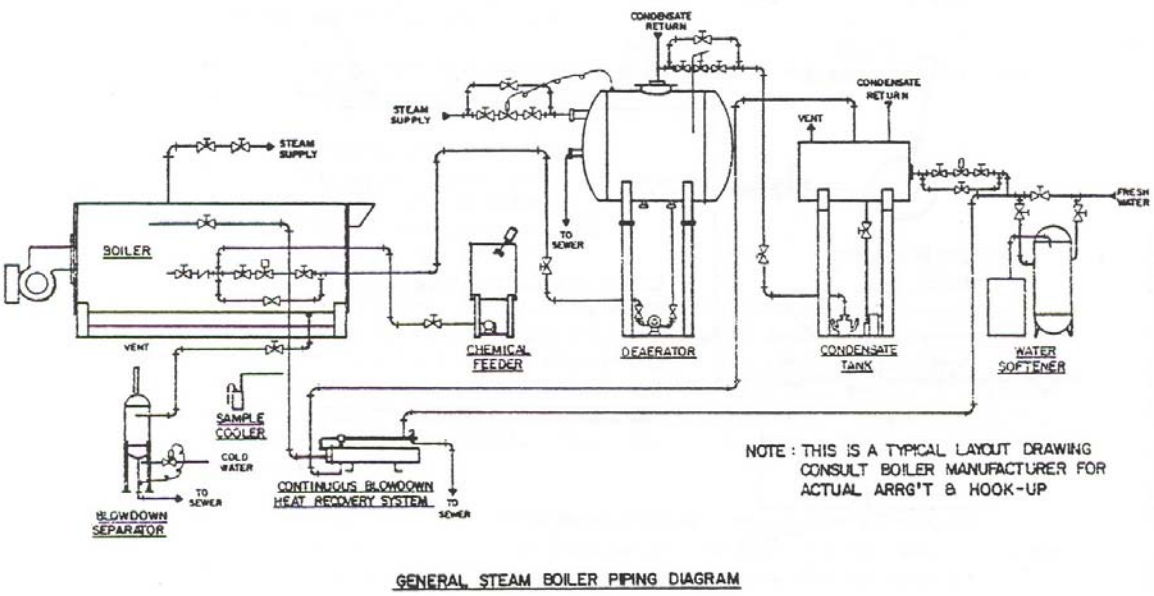

FIGURE 1

WATER BOILER PIPING DIAGRAM

This is a general arrangement diagram of components that make up a water boiler piping system. Follow the boiler manufacturer's recommendations as to location and size of the piping components. Care should be taken to follow their recommendations on piping and operation in order to prevent thermal shock to the boiler.

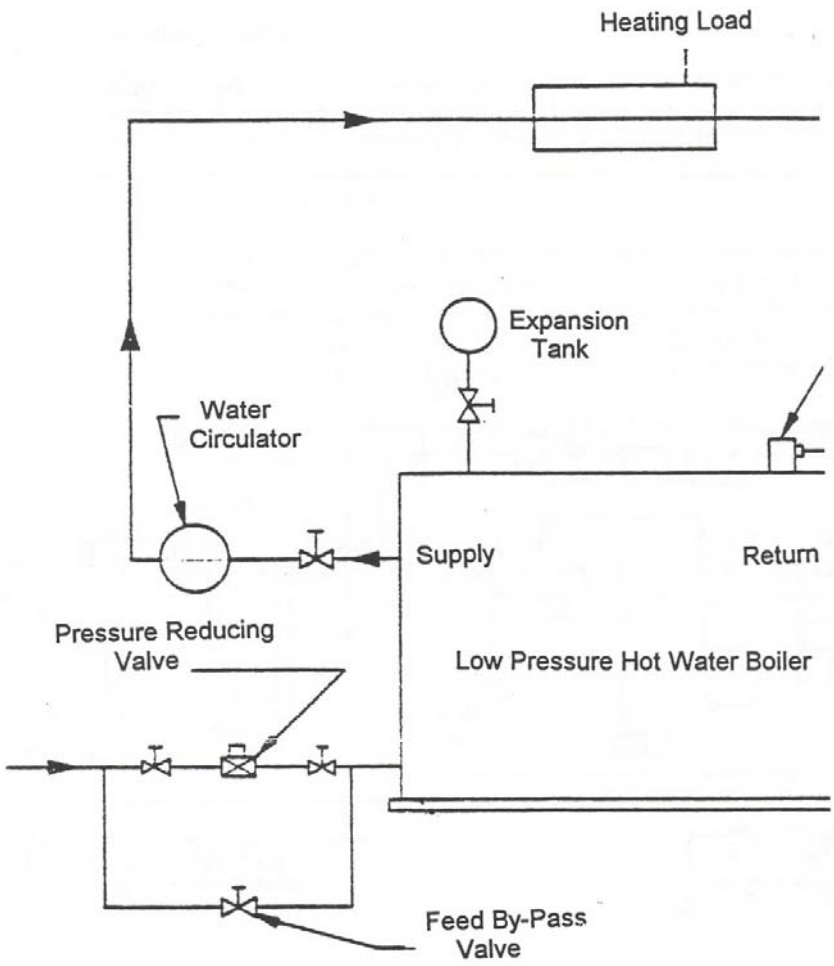

FIGURE 2

Hot Water Systems

One important phase in completing hot water heating installations, which is too often neglected, is proper cleaning of the system. The system is sometimes drained for changes and adjustments but never actually cleaned.

No matter how carefully a system is installed, certain extraneous materials do find their way inadvertently into the system during construction. Pipe dope, thread cutting oil, soldering flux, rust preventatives, slushing compounds, core sand, welding slag and dirt, sand, gravel or clays from the job site are usually found. Although the proportions of these contaminants may be small, there are sufficient quantities to break down chemically during the operation of the system causing gas formation and acidic system water.

Hot water systems must operate with a pH above 8.5. A system that has a pH below 8.5 will usually develop the following problems:

1. Gas formation (air trouble)
2. Pump seal and gland problems
3. Air vents sticking and leaking
4. Frequent relief valve operating
5. Piping leaks at joints

Once any of these conditions exist, the problems continue until corrected by cleaning. Many times, because of the gas formation, automatic air vents are added throughout the system to attempt a cure. The promiscuous use of automatic vents can defeat the function of the air elimination system. In a normal system, the small quantities of air finding their way to the system and piping must be returned to the expansion tank to maintain the balance between the air cushion and the water volume. Note that when a bladder-type expansion tank is used the manufacturer's recommendations should be followed with regard to the venting of air.

If system deterioration is permitted, leaks develop and water losses increase. This can cause serious damage to the boiler. Therefore, it is necessary to have a closed system that is clean, water tight and properly treated with a pH above 8.5.

Arrangements for Flushing Hot Water Heating Systems

Much of the dirt and contamination in a new hot water system can be flushed out prior to chemical cleaning of the system. This is accomplished (see figure 3 for flushing arrangement piping on following page) by first flushing the system to waste with clear water followed by a chemical wash.

The boiler and circulating pump are isolated with valves. City water is allowed to flush through successive zones of the system to waste, carrying chips, dirt, pipe joint compound, etc., with it. This is followed by a chemical flush. Removal of pipe chips and other debris before opening the isolating valves to the boiler and pump will help to protect this equipment from damage by this debris.

After this flushing process is complete the usual cleaning procedure is accomplished.
CAUTION. If one zone is flushed and cleaned before other zones are completed or connected, this process should be repeated on completion of additional zones loops or sections of piping.

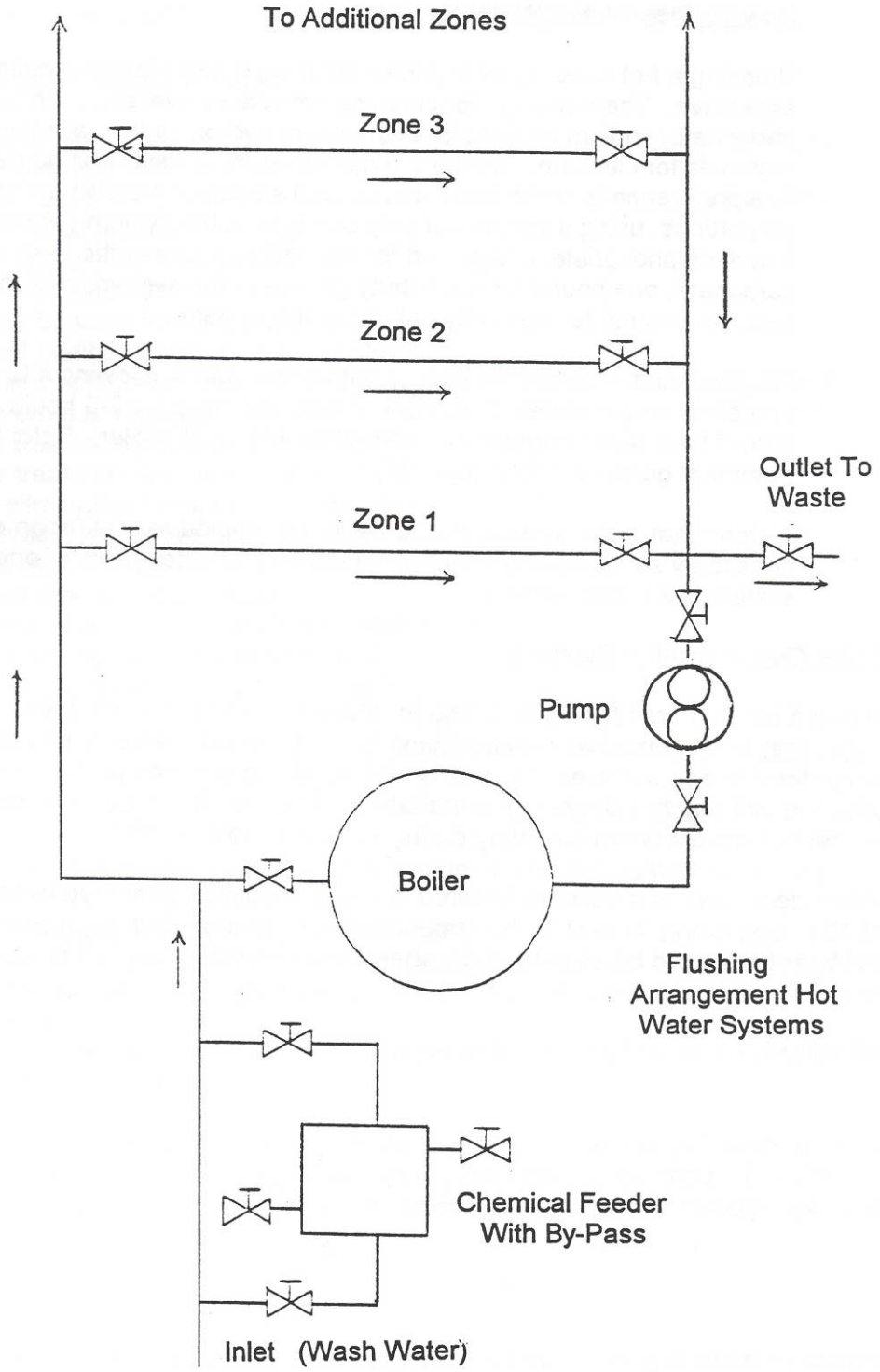
To Additional Zones
Zone 3
Zone 2
Zone 1
Outlet To
Waste
Pump
Boiler
Flushing
Arrangement Hot
Water Systems
Chemical Feeder
With By-Pass
Inlet (Wash Water)

FIGURE 3

How to Clean a Hot Water Heating System

Cleaning a hot water system (either steel or copper piping) is neither difficult nor expensive. The materials for cleaning are readily available. Trisodium phosphate, sodium carbonate, and sodium hydroxide (lye) are the most common materials for cleaning. They are available at most paint and hardware stores. The preference is in the order named and should be used in the following proportions, using a solution of only one type in the system (including boiler): Trisodium phosphate, one pound for each fifty gallons in the system; sodium carbonate, one pound for each thirty gallons in the system; sodium hydroxide (lye), one pound for each fifty gallons in the system.

Fill, vent, and circulate the system with this solution, allowing it to reach design-operating temperatures if possible. After circulating for 2-3 hours, the system should be drained completely and refilled with fresh water. Refer to the water treatment guidelines (see page 23).

A clean, hot water system should never be drained except for an emergency or necessary servicing of equipment which may be after years of operation. A clean system is a better system.

Boiler Operation after Cleaning

When a boiler is fired for the first time (or started after repairs or inspections), vapor and water may be observed as a white plume in the stack discharge or as condensate on the boiler fireside and surfaces. Generally, this condition is condensation that will disappear after the unit reaches operating temperature. This should not be confused with the stack plume that occurs when operating during extremely cold weather.

When cool down of a boiler is required, the unit should be permitted to cool over a period of 12 hours, losing its heat to the atmosphere. Forced cooling is not recommended and will possibly loosen tubes in the tube sheet or cause other damage to the pressure parts

Prior to start-up of the boiler follow the Installation and Start-up Checklist.

Installation & Start-Up Checklist

Have equipment operating manuals been received?	By whom
The manuals are located where?	
Manuals read & understand?	By whom
Boiler installed properly?	
System piping installed properly?	
All zones completed?	
Will boiler be used for temporary heat?	
When will additional zones be connected?	
Has boiler been boiled out?	
Has system been cleaned properly?	By whom

Is water treatment equipment installed? By whom
Is water treatment equipment operational?
Has air elimination for hot water boiler been assured?
Is fuel available for start-up?
Who will perform start-up?
When will start-up be performed?
Has water treatment program been established?
Who is responsible for water treatment?
Have boiler operating logs been set up?

Checked and verified by: _____

Date: _____

During operation the following may indicate unsatisfactory system water conditions.

1. Obviously discolored, murky, dirty water.

2. Air binding of the systems is caused by accumulation of gases at high points. These gases may ignite and burn with an almost invisible bluish flame when vented.

3 A pH or alkalinity test that gives a pH less than 8.5 (below 7 indicates the water in the system is acidic).

The condition of the water can be quickly tested with universal pH paper, which is used in the same manner as litmus paper except it gives specific readings. The pH paper is inexpensive and obtainable from any chemical supply house or through your local druggist.

Temporary Use

A boiler is often utilized in new construction to assist in curing of building components or for temporary heat for the construction crew, or for other purposes during the construction period. If precautions are not taken during this time to protect the boiler, a great deal of damage can occur before the ultimate owner takes over the building. It is the mutual responsibility of the boiler owner and the installing contractor to consider the effect of temporary usage on the boiler warranty. The following should be observed to assure boiler longevity.

Operator Skills/Responsibilities

During the temporary use period a single individual must be assigned the responsibility for the care and operation of the boiler. This person's responsibilities must include but are not limited to:

- Knowledge of burner/boiler operation.

- Possession and understanding of operating instruction manuals.
- Assurance that the boiler is fed treated make-up water at all times.
- Assurance that a hot water system has been flushed properly.
- Operation to maintain at least 170°F operating temperature, or the minimum operating temperature as defined by the boiler manufacturer, for hot water units
- Assurance that the external feedwater treatment equipment is installed and operating.
- Notification to the manufacturer to provide services if the boiler was purchased with factory start-up.
- Adherence to all of the start-up procedures noted earlier in this section.
- Consideration of warranty if the boiler is used for temporary use without following recommended start-up guidelines.

MAKE UP FOR HOT WATER BOILERS

It is important to recognize that hot water systems and boilers will require some amount of raw water make-up. This make-up may be due to leaking pump seals, equipment leaks, piping leaks, drain down for inspection or system repairs, weeping relief valves, improper expansion tank operation and various other causes for leaks.

Raw make-up introduced into hot water boilers requires that the water be properly treated for dissolved oxygen and hardness. These are the two basic causes of hot water boiler failures. One should also note how much make-up is being fed into the system.

A recommendation for a hot water make-up system is illustrated in the sketch on page 16. Its use in new or existing installations will help the boiler operator recognize system leaks and assist in the proper water treatment guidelines.

CHEMICAL AND MECHANICAL CLEANING

Mechanical cleaning of boilers is an inherently safer method of removing scale than acid cleaning. This is because there is less chance to damage the boiler metal. However, the boiler will be out of service for a longer period. Mechanical devices used to remove scale include high pressure water jets, wire brushes, cutters or turbines and rattlers.

Chemical cleaning is a rapid means of removing scale. However, the boiler tubes can be severely damaged if proper care is not taken. Accordingly, it is recommended that firms who specialize in chemical cleaning be retained for this type of work. If a boiler is chemically cleaned, we recommend that all manholes and handholes be opened after the final wash. The seating surfaces should be flushed with water, and new gaskets installed. Failure to do this may permit serious damage to occur. This is because the cleaning agents can be retained in crevices, which are not reached by the final washing solution. When the boiler is returned to service without replacing the gaskets, severe corrosion can occur and eventually cause leakage of boiler water.

CHAPTER II

FEEDWATER SYSTEMS

FEEDWATER SYSTEM COMPONENTS

A feedwater system may include one or several components piped together to provide a method of introducing treated feedwater into a boiler.

A reliable feedwater treatment consultant should be contracted to analyze the water and recommend a proper water chemistry program to prevent:

- Corrosion
- Scale forming deposits
- Carryover
- The required level of steam purity

In the absence of manufacturer's instructions or those of a feedwater treatment consultant, the guidelines shown in Table 1 or Table 2 may be used as a reference.

Components which could be included in a feedwater system are:

Softeners

Softeners are required_where natural hardness exists in ground water. This hardness consists of calcium and magnesium compounds, which are relatively insoluble in water and tend to precipitate out causing scale and deposit problems.

Levels of hardness, maximum flow rates, hours of operation, and amount of make-up water are needed to correctly size softening equipment.

Dealkalizers

Dealkalization is a process to reduce the boiler water alkalinity, as an aid in reducing the possibility of corrosion due to carbonic acid attacking the condensate system. The use of a dealkalizer usually requires the addition of a sodium hydroxide (caustic soda) injection system for pH adjustment.

Deaerators

Deaerators mechanically remove oxygen and carbon dioxide found in most raw water. These gases are removed from the raw water by the use of steam, which increases the water temperature, and by various mechanical means, which break up the water particles. The deaerator may be one of three types:

- Tray deaerator
- Spray deaerator
- Packed column deaerator

Condensate Receiver (Hot Wells)

Condensate receivers are required in a system to provide a collection and storage point for returning condensate.

In addition to collecting returning water, the receiver provides:

- A point at which make-up water can be introduced into the system.
- A point at which heat can be added to the make-up water so that cold water is not fed into the boiler. The heating process will also reduce the oxygen level in the make-up but this is not as effective as a deaerator.

Demineralizer

Demineralization is a method of reducing solids in raw water by ion exchange. It is normally used in boiler systems above 300 psig pressure.

Reverse Osmosis Equipment

Reverse osmosis is a method of reducing the dissolved solids in raw water by the use of a semi-permeable membrane. It is normally used in boiler systems operating above 300 psig pressure.

Internal Treatment Equipment

Internal treatment equipment is used to introduce any chemical treatment, which may be necessary for good water chemistry. The type of equipment required will depend upon the condition of the raw water. Equipment selection, chemical selection and the injection point(s) of the chemicals should be made by a qualified chemical treatment firm.

Types of chemical feed equipment available are:

- Intermittent-shot feeders
- Proportioning feeders
- Injection pump systems which may include storage tank and agitator

Filters

Required to remove sand, gravel, mud and other solid matter where physical rather than chemical impurities are found in raw water.

INSTALLATION OF CHEMICAL TREATMENT EQUIPMENT

Installation of a chemical treatment system should be in accordance with recommendations of the boiler manufacturer and chemical consultant.

Maintenance

Maintenance procedures recommended by the feedwater system component manufacturers should be followed. Do not expect the equipment to do more than it was designed to do.

TABLE 1

RECOMMENDED FEEDWATER LIMITS FOR FIRETUBE BOILERS

Drum Pressure psig	Dissolved Oxygen ppm	Total Iron ppm	Total Copper ppm	Total Hardness ppm	pH	Nonvolatile TOC ppm	Oily Matter ppm
0 – 15	< 0.03	≤ 0.1	≤ 0.05	≤ 1.0	8.3 – 10.5	< 10	< 1
16 – 300	< 0.007	≤ 0.1	≤ 0.05	≤ 1.0	8.3 – 10.5	< 10	< 1

TABLE 2

RECOMMENDED FEEDWATER LIMITS FOR INDUSTRIAL WATERTUBE BOILERS

Drum Pressure psig	Dissolved Oxygen (ppm)	Total Iron ppm	Total Copper ppm	Total Hardness ppm	pH	Nonvolatile TOC ppm	Oily Matter ppm
0 – 300	< 0.007	≤ 0.1	≤ 0.05	≤ 0.3	8.3 – 10.0	< 1	< 1
301 – 450	< 0.007	≤ 0.05	≤ 0.025	≤ 0.3	8.3 – 10.0	< 1	< 1
451 – 600	< 0.007	≤ 0.03	≤ 0.02	≤ 0.2	8.3 – 10.0	< 0.5	< 0.5
601 – 750	< 0.007	≤ 0.025	≤ 0.02	≤ 0.2	8.3 – 10.0	< 0.5	< 0.5
751 – 900	< 0.007	≤ 0.02	≤ 0.015	≤ 0.1	8.3 – 10.0	< 0.5	< 0.5
901 – 1000	< 0.007	≤ 0.02	≤ 0.01	≤ 0.05	8.8 – 9.6	< 0.2	< 0.2
1001 – 1500	< 0.007	≤ 0.01	≤ 0.01	≤ 0.05	8.8 – 9.6	< 0.2	< 0.2
1501 - 2000	< 0.007	≤ 0.01	≤ 0.01	≤ 0.05	8.8 – 9.6	< 0.2	< 0.2

CHAPTER III

TESTING

GENERAL

It is recommended that agreement be reached between the boiler manufacturer, the owner and the owner's water treatment consultant, regarding testing methods, or procedures to be employed, prior to finalization of the sales contract. Depending upon agencies involved the test methods for certain parameters may vary, and as a result may yield differing answers.

Monitoring the various water streams is an important part in the successful operation of steam or hot water boiler systems. Failure to do so may cause unscheduled equipment failure, or lead to operating problems, which could otherwise be avoided. The testing may be either chemical or mechanical, or a combination of both. The chemical tests most commonly employed are as follows:

Test	Equivalent Reported
Phenolphthalein Alkalinity	$CaCO_3$
Methyl Orange Alkalinity	$CaCO_3$
Chloride	Cl or NaCl
Total Hardness	$CaCO_3$
pH	Expressed in units
Soluble Phosphate	PO_4
Sulfite	SO_3 or Na_2SO_3
Total Dissolved Solids	Micromhos or ppm

Modem chemical analyses will usually be reported as parts per million. In some cases, the older term grain per U.S. gallon is employed. One *gr/gallon* equals 17.1 ppm.

pH is a measure of the hydrogen ion concentration, and covers a range of 0-14. A pH of 7.0 is neutral. Above pH 7, the solution is alkaline, below pH 7, it is acidic.

STEAM BOILER SYSTEMS

Make-up

Total hardness test is used to monitor the operation of the water softener. The effluent hardness will begin to rise as the end of the useful softening cycle is reached. Determination of the hardness establishes when regeneration should be initiated. The Versene hardness test has replaced the older soap method because it is much simpler, more accurate and less time consuming.

Alkalinity is used to monitor chloride anion dealkalization. In this case, the alkalinity of the effluent increases as the ion exchange capacity reaches its limit. Regeneration of the dealkalizer is initiated when the alkalinity reaches some predetermined point. Alkalinity is also normally used to determine when the unit has been rinsed sufficiently and is ready to be returned to service.

Chloride is measured after regenerating a sodium softener. The purpose is to make sure that the unit has been rinsed sufficiently and is ready to be returned to service. High chloride concentrations indicate that the brine has not been completely rinsed. Alternate tests, which may be used in controlling the rinse cycle, are total dissolved solids and total hardness.

Feedwater

Total hardness determination serves many purposes. If the raw water is not softened, then it can be used to determine the percentage of raw water in the feedwater. Where a softener is used to remove hardness, it serves to indicate contamination caused by unsoftened water.

Chloride or total dissolved solids testing is also used to check feedwater quality. They would normally be employed to detect contamination from a source other than the raw water.

Boiler Water

Phenolphthalein alkalinity is used to control the feed of caustic soda or the rate of blowdown. Problems with foaming or priming may be attributed to high alkalinity. While not necessarily true, it is usually prudent to avoid excessive concentrations.

Chloride or conductivity tests are normally used to control the boiler water solids concentration through blowdown. Like alkalinity, abnormally high solids concentrations may promote the tendency for foaming or priming.

Sodium sulfite is the most commonly used chemical oxygen scavenger below 400 psig. Determination of the sulfite residual in the boiler water is used to control the feed of this chemical.

The importance of maintaining proper control over the scale inhibiting chemicals cannot be over emphasized. The water treatment consultant will recommend the tests, which are to be used in maintaining proper treatment concentrations.

Condensate

pH measurement is used to control the feed of neutralizing amines, which are commonly employed to control corrosion. A pH meter or the use of pH indicators is acceptable.

Condensate conductivity will normally be low simply because it is relatively pure water. Increases in conductivity will reflect mineral contamination. However, additional analyses will usually be required to clearly define the source of contamination.

Corrosion monitoring is important when using filming amines for corrosion control. This is because there is no simple, suitable test, which is employed in controlling the feed of filming amines. Corrosion studies are also desirable when applying neutralizing amines. Rectangular specimens are preferred because the nature of corrosion can be more clearly observed with this type of coupon. (See also Figure 4, page 28.).

HOT WATER BOILER SYSTEMS

Make-up

The quantity of make-up used is usually more important then the quality (hardness). Scale formation is not ordinarily a problem in systems, which do not have significant water losses. A suitable monitoring device which measures the quantity of make-up water used not only indicates when unknown increases in water loss occur, but may also prove helpful in establishing whether or not the quality of the make-up should be improved through softening.

Boiler Water

The hardness will normally stabilize at some average level, which will be related to the make-up water characteristics and operation of the system. Increases in hardness would tend to indicate higher than normal make-up water usage and increased potential for scale formation.

pH should be monitored because it will be desirable to maintain moderately alkaline conditions to minimize the potential for corrosion. (NOTE: These levels shall be established by operation and experience of the water treatment consultant.)

The concentration of water treatment chemicals should be closely monitored. Such materials would usually be employed to control corrosion and/or scale formation.

Corrosion monitoring is desirable. This serves to insure that optimum conditions are being maintained in the boiler water.

RECOMMENDED
CORROSION TEST SPECIMEN
CLOSED-LOOP BYPASS INSTALLATION

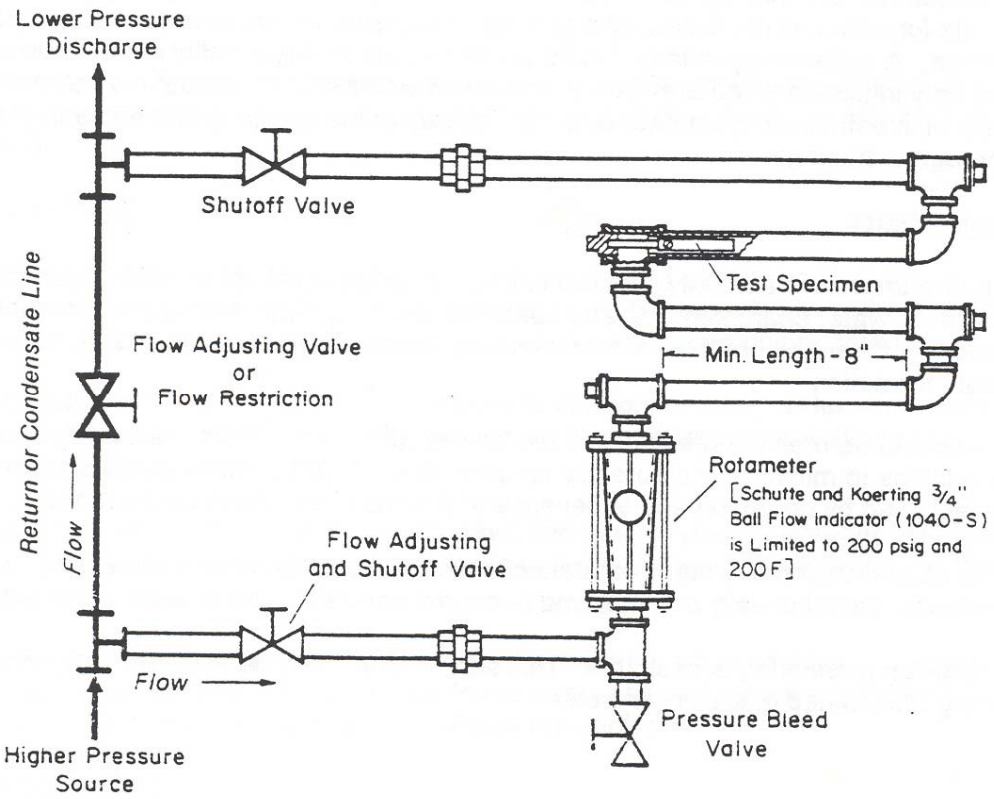

NOTES

1. All piping and valves for the bypass are to be 3/4 inch iron or steel.
2. To minimize any tendency for the accumulation of sediment or the entrapment of air around test strips, install the bypass in vertical line, around two points where there is a pressure differential
3. Close shut off valves and open bleed valve before removing any test specimens.
4. Test specimens must be handled carefully to avoid coating with natural oil from the skin, with thread compound or any similar material. .
5. The end of the pipe plug holder is notched parallel to the flat side of the test specimen. When installing, the notch (consequently the specimen) is to be positioned vertically
6. As a rule, all specimens are to be installed at the same time. Removal is to be at intervals to measure the effect of exposure time.
7. Adjust flow through the bypass to 3-5 gallons per minute, equivalent to 1.8-3.0 feet per second with 3/4 inch pipe.
8. When removed, each specimen is to be carefully disconnected from the holder and then immediately dried with a blast of hot air or by sponging with a paper towel or tissue. Do not clean
9. Analysis of corrosion tests can be obtained from your contracted water consultant.

FIGURE 4

CHAPTER IV

CONDENSATE SYSTEM PROTECTION

CAUSES OF CORROSION

Carbon Dioxide

Corrosion in steam/condensate return systems is usually caused by carbon dioxide. This is because it dissolves in the water formed when condensation occurs, producing carbonic acid. Corrosion caused by carbonic acid will occur below the water level, and it can be identified by the channeling or grooving of the metal wall.

Breakdown of the make-up alkalinity is the source of carbon dioxide. This occurs as the water is heated in the boiler. If the amount of carbon dioxide in the steam is to be reduced, then treatment of the make-up water is required to reduce the alkalinity.

Oxygen

Oxygen can also cause corrosion in condensate systems. However, it is not as common as carbon dioxide corrosion because oxygen can be removed from the feedwater through temperature elevation in a hot well or deaerator and by the use of chemical oxygen scavengers. Oxygen corrosion occurs wherever moisture is present, so it will be found both above and below the level of water in the piping. It is easily recognized because of the characteristic pitting.

Severe oxygen corrosion usually occurs in vacuum return systems. Leaks permit air to be drawn into the system. Effective maintenance of the system is required to properly control this problem. Corrosion due to oxygen also occurs in systems, which are operated intermittently. There usually is no simple mechanical solution to this problem.

TREATMENT

Neutralizing Amines

These are organic compounds, which are used to neutralize the acidity of the condensate. The corrosivity is greatly reduced by maintaining the condensate pH in an alkaline range. A pH somewhere between 8.0 and 9.0 is usually recommended. The severity of oxygen corrosion is also reduced at this high pH.

The properties of neutralizing amines vary with respect to their neutralizing ability and also the manner in which they are distributed throughout the steam distribution system. Accordingly, they may be used alone or in combination to achieve the

desired results. Cyclohexylamine, diethylaminoethanol and morpholine are the most commonly used neutralizing amines. This is primarily because they are approved for use in plants, which are regulated, by the Federal Drug Administration (FDA) and U.S. Department of Agriculture (USDA).

Filming Amines

Unlike neutralizing amines, filming amines do not neutralize acidity or raise pH. Rather, they form a nonwettable barrier, which repels the corrosive environment of the condensate. They are known as polar amines because one end of the molecule attaches itself to the metal surface when condensation occurs. Filming amines can handle severe oxygen corrosion problems more effectively than neutralizing amines.

The properties of filming amines also vary, particularly with respect to the corrosion resistance of the water repellent film. Combinations of filming and neutralizing amines are often employed. Octadecylamine is the only filming amine approved for application in FDA/USDA regulated plants. Unlike neutralizing amines, it is preferable to inject filming amines directly into the steam header. This is largely because the boiling point of these materials usually exceeds that of the boiler water.

CAUTION: In existing systems the gradual introductions of filming amines is recommended to avoid the rapid removal of corrosion products. Fast removal of rust will cause plugging of traps and strainers.

Organic Oxygen Scavengers

Volatile or organic oxygen scavengers are employed as supplementary treatments, particularly where oxygen is causing a corrosion problem. Organic oxygen scavengers have the ability to establish and maintain a corrosion resistant film on the metal surfaces. This is usually called metal conditioning. In condensate treatment, these materials are not usually used to completely remove oxygen from the condensate.

MONITORING

The sample point or method of sample can influence results. If the condensate is hot or under pressure and flashes, then carbon dioxide may be lost. This raises the pH. Accordingly, it is preferable to cool the condensate sample to room temperature.

It is not absolutely necessary to use a completely representative test or sample to assure success in effectively regulating a condensate corrosion control program. Rather, it is the consistency in sampling and testing that is important.

Corrosion monitoring is important when using filming amines for corrosion control. This is because there is no simple, suitable test, which is employed in controlling the feed of filming amines. When using organic oxygen scavengers, such studies help determine if the metal surfaces are being effectively conditioned. Corrosion studies are also desirable when applying neutralizing amines. The bypass installation shown on page 28 is normally used for this purpose. Rectangular or oblong specimens with a flat surface are preferred because the nature of corrosion can be more clearly observed with this type of coupon.

CHAPTER V

IDLE BOILER CARE AND LAY-UP

GENERAL

Corrosion damage to industrial/commercial/institutional boilers is most often the result of improper lay-up during nonoperating periods. Substantial damage can occur in only a few days if proper precautions are not taken. This damage is irreversible and will reduce boiler reliability, increase maintenance costs and eventually shorten the useful life of the boiler. Both the water/steam sides and the fire/gas sides must be protected.

Idle boilers are very vulnerable to attack when air contacts untreated wet metal surfaces. To prevent corrosion, therefore, the boiler metal must be protected by either keeping the surfaces completely dry or excluding all air from the boiler.

In addition to the corrosion damage that occurs, the metal particles that are released will form an insulating scale in the operating boiler when the system is returned to service. These corrosion products will deposit on critical heat transfer areas of the boiler, increasing the potential for localized corrosion and overheating during system operation.

Proper lay-up techniques must be used for idle equipment even if it has never been in operation. Before preoperational lay-up, the boiler should be cleaned with an alkaline detergent solution to remove preservatives, oil and grease. (See page 19 on chemical cleaning for specific recommendations.)

TAKING BOILER OFF-LINE

In operation, boiler water contains suspended solids (or mud) which are held in suspension by water circulation and the action of treatment chemicals. Unless care is exercised when draining, these suspended solids settle out on the boiler surfaces and air dry to an adherent deposit, sometimes requiring turbining of the boiler. In addition, unless the deposits are examined carefully, it may be incorrectly assumed that the deposits are scale, which formed during operation. Therefore, in order to judge the effectiveness of the water treatment program and to eliminate unnecessary boiler cleaning, proper care is imperative during shutdown.

Pre-shutdown Precautions

For a period of three (3) to seven (7) days before shutdown, manual blowdown should be increased. During this period, the lower conductivity or chloride limit should be observed as a maximum. The feed of internal treatment must be increased to maintain specific residuals. Continuous blowdown should be kept to a minimum so the reduction in solids is achieved by increased manual blowdown.

If it is necessary to use a draw-and-fill method for cooling, the pressure should be lowered, and cooling should be at the rate recommended by the boiler manufacturer. Care should be taken to maintain recommended treatment balances during this process. Feedwater should be deaerated.

Wash Down

As boiler is being drained, the manhole or manholes and hand holes should be knocked in and a high pressure hose employed to wash out sludge. By this procedure, the sludge is removed while still in a fluid form.

If the boiler cannot be washed immediately on draining, heat in the boiler setting may cause baking of residual sludge. The boiler should not be drained until cool. However, never leave the boiler filled with water for any extended period of time without taking measures to prevent corrosion and pitting.

STEAM BOILERS

There are two basic procedures for laying up a steam boiler-wet and dry. The choice between the wet and dry methods of lay-up depends on several factors.

- Possibility that the boiler may need to be placed in operation on short notice.
- Disposal of lay-up solutions.
- Freezing possibilities.

Wet lay-up is recommended for short outages (30 days or less) and has the advantage of allowing the boiler to be returned to service on short notice. But, this method can be a problem if the boiler will be exposed to freezing conditions.

Dry lay-up is recommended for long idle periods (greater than 30 days), but is practical only if the boiler can be drained hot (120-170°F) or if external drying can be provided.

Short Term (30 days). Wet Lay-Up Steam Boilers

In the wet procedure, the boiler is completely filled with chemically treated water and sealed to prevent air in-leakage. Nitrogen gas under slight pressure can also be used to displace air and "blanket" the boiler surfaces from corrosion.

The following steps should be taken to wet lay-up a boiler.

1A. At least 30 minutes before the boiler comes off the line, add the following chemicals.

Sodium Sulfite	51b/1,000 gal. Water
A Polymeric Sludge Dispersant	1lb/1,000 gal. Water
Caustic Soda	3 lb/1,000 gal. Water

1B. If the boiler had been out of service for cleaning or has never been on-line, use the following procedures

Select the highest quality water available to lay-up the boiler. Steam condensate, softened water, filtered fresh water, and boiler feedwater are generally acceptable for lay-up. Raw city water should not be used.

Prepare the chemical solution in a separate tank using the concentrations listed above (see also Safety Precautions page 8). Add the concentrated lay-up solution to the boiler during the time it is being filled. The solution can be added using the operational or chemical feed line.

After the boiler is filled and the lay-up solution has been added, operate the boiler at low fire for at least 30 minutes to obtain circulation and mixing of chemicals.

2. After filling, the boiler must be tightly blanked or closed. Electric energy to the unit must be cut off. All vent valves are operated as needed so that the boiler can be completely filled with the required solution. To prevent in-leakage of air, pressurize with 5 psig nitrogen through a suitable connection during the lay-up period (see Safety Precautions page 8). An alternative is to install a 55 gallon drum or auxiliary vessel, fitted with a cover and containing properly treated water, on top of the steam drum. The drum or vessel should be connected to an available opening such as a vent line at the top of the boiler to create a hydrostatic head. The tank will provide a ready visual check of water level loss or in-leakage during lay-up. (See Figure 5)

3. Laid up boiler water must be tested weekly to make sure that the proper levels of sulfite and alkalinity are being maintained. To do this, take a sample of the boiler water from the surface blowdown line or other high point. The test results should be:

200 ppm minimum, sodium sulfite (as SO_3)
400 ppm minimum, phenolphthalein alkalinity (as $CaCO_3$)

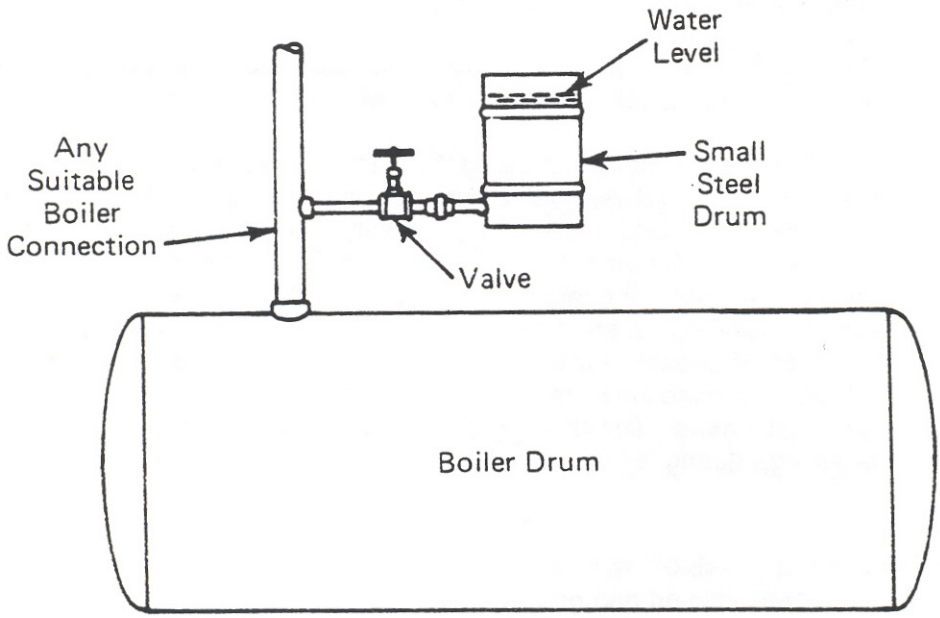

ARRANGEMENT FOR KEEPING BOILERS COMPLETELY FULL OF WATER DURING WET LAY-UP.

FIGURE 5

If the tests show that chemical concentrations have decreased below the recommended minimum, a practical procedure is to add additional lay-up solution to the drum and inject into the boiler by lowering the water level. To mix the chemical, operate at low fire, and then follow the procedures previously described under item 2 for complete filling of the boiler. Attention should be directed to valve maintenance so that untreated water does not accidentally enter the boiler and cause dilution of properly treated lay-up solutions.

NOTE: An alternate wet lay-up procedure is to pipe clean continuous blowdown water from a properly treated operating boiler into any convenient bottom connection on the idle boiler, allowing the excess water to overflow from the vents to the sewer. This method will insure a continuous complete fill with warm, properly treated water and will prevent air in-leakage by keeping the waterside slightly pressurized. In addition, it may provide enough heat to keep the fireside dry, and provide freeze protection.

Long Term (over 30 days). Dry Lay-Up. Steam Boilers

In storing a boiler dry, trays of moisture-absorbing chemicals are placed in the boiler, and all openings are sealed. In an alternate dry procedure, the boiler is drained, dried as completely as possible, the manholes closed and all connections tightly blanked or closed, and then pressurized with nitrogen to prevent air from getting inside the boiler. The success of this procedure depends on thorough drying of all boiler metal surfaces after draining and the exclusion of air during lay-up by pressurizing the boiler with nitrogen (See also Safety Precautions, Nitrogen Blanket Method page 37).

CAUTION: Boilers laid up dry shall be tagged with information to indicate the unit must not be operated until moisture-absorbing chemicals are removed and the boiler refilled.

The following steps should be taken for dry lay-up.

Desiccant Method

1. After the boiler has cooled, drain it completely.

2. Flush the boiler thoroughly and inspect it. A boiler containing porous moisture-retaining deposits should not be laid up dry because of the possibility of under-deposit corrosion occurring. If cleaning is needed, this must be done before the boiler is laid up.

3. Dry thoroughly. Circulated warm air should be used in drying the metal.

4. Put quick lime (not hydrated lime) or commercial grade silica gel on wooden or plastic trays and place them inside the boiler drums or shell. The trays should be placed so that air may circulate underneath. Use at least 5 lbs. of quick lime per 1,000 lbs/hr steaming capacity or 5 lbs. per 30 boiler horsepower. If silica gel is used, the quantities recommended are 8 lbs. of silica gel per 1,000 lbs/hr steam capacity or 8 lbs. per 30 boiler horsepower. Do not fill the trays more than half full.

5. Close all manholes and blank or close all connections on the boiler as completely as practicable to prevent in-leakage of humid air. An option is to pressurize the boiler with 5 psig nitrogen after the desiccant is installed.

6. Inspect the waterside of the boiler every three months for evidence of active corrosion. Check the desiccant and replace if necessary. If the boiler has been pressurized with nitrogen, it should not be entered until the safety precautions described below for nitrogen have been taken. Do this work as quickly as possible to minimize entry of humid air.

7. If desiccant is wet, dry out the boiler again before replacing the desiccant and repressurize with nitrogen.

CAUTION: Boilers laid up dry shall be tagged with information to indicate the unit must not be operated until the desiccant is removed and the unit refilled.

Nitrogen Blanketing Method

1A. Drain the boiler before the pressure falls to zero and pressurize with 5 psig nitrogen through a suitable connection while draining. Maintain this nitrogen pressure throughout draining and subsequent storage.

1B. An alternate method is to completely dry a clean boiler and then purge air from the boiler and pressurize with 5 psig nitrogen. Be aware that all metal surfaces not completely dried are vulnerable to corrosion, particularly if oxygen is present. Drying can be aided by employing low auxiliary heat *or* blowing hot dry air through the boiler.

2. If a boiler has been down for repairs and is to be laid up with nitrogen, it should be operated to repressurize with steam and then drained and pressurized with nitrogen as previously discussed in 1A or follow procedure discussed in 1B.

3. All connections and valves must be blanked or tightly closed

NOTE: Operating boilers must be removed from service properly to minimize adherence of boiler water suspended solids on boiler metal surfaces. This can be accomplished by immediate flushing with hot, pressurized water, while waterside surfaces are still wet. If a boiler contains deposits that formed during operation or due to improper shutdown procedure, mechanical or chemical cleaning is required.

Safety Precaution

The use of nitrogen for blanketing is recommended in many of the lay-up procedures. Nitrogen will not support life; therefore, it is essential that proper precautions be taken before such equipment is entered for inspection or other purposes. These precautions shall include disconnecting of the nitrogen supply line, thorough purging and venting of the equipment with air and testing for oxygen levels inside the equipment. Appropriate caution signs shall be posted around the equipment to alert all personnel that nitrogen blanketing is in use.

Returning Idle Steam Boilers to Service

After Wet Lay-up

To start-up an idle boiler after wet storage use the following procedure.

1. If the boiler was pressurized with nitrogen, disconnect the nitrogen supply sources and vent the boiler.

2. Using the blowdown valve, partially drain the boiler water and make-up with feedwater to dilute chemical residuals to operating levels.

3. After the boiler water concentration and water level is returned to proper operating conditions, the boiler can be started up in the normal manner.

After Dry Lay-Up

To start-up a boiler after dry storage, use the following procedure.

1. If the boiler was pressurized with nitrogen disconnect the nitrogen supply. Vent the nitrogen in a safe manner external to the building and away from intakes. Then thoroughly purge the boiler of nitrogen with dry air. This is mandatory before personnel enter the equipment since nitrogen (or lack of oxygen) will not support life.

2. Remove any and all desiccant from the boiler.

3. Follow manufacturers' start-up procedures.

LAY-UP OF A HOT WATER BOILER

Prior to start-up, a new boiler which contains oil, grease, cutting solutions and other contaminants, should be cleaned. Likewise, a hot water boiler containing very dirty water or an untreated system should be flushed and cleaned prior to lay-up. (See page 14 on chemical cleaning for specific recommendations.)

There are two basic procedures for laying up a hot water boiler: wet lay-up and dry lay-up. The choice between the wet and dry methods of lay-up depends on:

- The possibility that the boiler will be returned to service
- Freezing possibilities.

Wet lay-up is normally recommended for hot water boilers and their associated systems. But this method can be a problem if the boiler will be exposed to freezing conditions.

Dry lay-up is only suggested for indefinite idle periods (frequently over 1 year), but is practical only if the boiler and system can be drained hot (over 120°F). (See page 39)

Wet Lay-up

The boiler and system are completely filled with chemically treated water and sealed to prevent air in-leakage. The following is the recommended procedure for wet lay-up.

1. The boiler and system should be completely filled with good quality water.

2. In a separate tank, prepare either of the following chemical solutions.

A. Borax	8 lbs/1000 gals of holding capacity
Nitrite	6 lbs/1000 gals of holding capacity
B. Sodium Sulfite	51bs/1000 gals of holding capacity
Sodium Hydroxide	3.5 lbs/1000 gals of holding capacity

The solution for alternative A may be the same chemical program on which the boiler is maintained while in service.

3. Fill the boiler with the chemical solution, providing for adequate mixing. The boiler and system should be completely filled, eliminating all air pockets.

4. After filling, the boiler must be tightly blanked. All vent valves are operated as needed so that the boiler can be completely filled with the required solution.

5. Layed-up boiler water must be tested monthly to make sure that the proper chemical levels are being maintained and that the system is completely filled with water. To do this, take a sample of the boiler water from the surface of the boiler. The test results should be:

A. 250 ppm minimum, nitrite (as NO_2)
pH between 9.5 and 10.5
B. 200 ppm minimum, sodium sulfite (as SOP_3)
400 ppm minimum, phenolphthalein alkalinity (as $CaCO_3$)

Add additional chemicals as needed, insuring that they are mixed properly by firing the boiler lightly to circulate the water. Be certain that no air is introduced into the system when the chemicals are added.

Long Term Dry Lay-Up of the Hot Water Boiler

The long term dry lay-up of a hot water boiler is identical to the dry lay-up of a steam boiler and should be used only when the boiler is not expected to be returned to service. See page 36 for specific lay-up instructions.

CAUTION: Boiler laid up dry should be properly tagged and identified that the boiler is dry and desiccants are in place.

Returning Idle Hot Water Boiler to Service

After Wet Lay-up

To start-up an idle boiler after wet storage use the following procedure:

1. Isolate and partially drain the boiler. Add fresh make-up water to dilute

chemical residuals to operating levels.

2. After the concentration is returned to proper operating conditions, the boiler can be started up in the normal manner.

NOTE: Some sanitary districts restrict the amount of nitrite which may be placed in the sewer system. Check applicable regulations prior to disposing of the chemicals.

After Dry Lay-Up

To start-up a boiler after dry storage, use the following procedure:

1. If the boiler was pressurized with nitrogen, disconnect the nitrogen supply; vent the nitrogen in a safe manner, external to the building and away from fresh air intakes. Then thoroughly purge the boiler of nitrogen with dry air. This is mandatory before personnel enter the equipment, since nitrogen will not support life.
2. Remove any and all desiccant from the boiler.
3. Follow manufacturer's start-up procedures.

Safety Precautions

Safety is a critical factor that is often overlooked. The following safety factors must be observed during a boiler lay-up.

Obtain Material Safety Data Sheets from the Supplier for all chemicals used for cleaning and/or lay-up. Read and follow the recommended handling procedures and precautions.

FIRESIDE LAY-UP

Fireside lay-up procedures are designed to keep metal surfaces dry. Moisture and oxygen cause corrosion by forming acids with any fuel deposits left in the boiler. These acids attack steel. Precautions taken during lay-up will inhibit metal degradation and prolong boiler life.

The deposits themselves can cause three types of problems. First, as deposits form, they can produce corrosion at the interface of the metal and deposit. Second, the deposit may trap fly ash which adds to the bulk of the deposit. Third, fly ash constituents such as iron, vanadium, and sodium may react with sulfur compounds to form highly corrosive, low pH deposits.

All of these problems can be prevented by a good fireside maintenance program. Fireside cleanup for coal and oil fired boilers may be done by water washing the tube surfaces with lances or high pressure hoses. Tenacious deposits may have to be sandblasted from the

tube surface. For boilers burning natural gas, brushing the tubes and vacuuming up the debris is probably all that is necessary.

But cleaning deposits from the tubes is not all it takes. Clean tube surfaces are also vulnerable during lay-up to rust and corrosion. This is because the water used to clean the fireside reacts with sulfur compounds in the ash deposits to form sulfuric and sulfurous acid. Iron or vanadium, fuel impurities, will speed up this reaction and intensify the corrosion.

To prevent these problems, two methods of lay-up are used: hot or cold. Cold lay-up is better for extended outages (longer than 3 months) or if boiler repairs are needed. For minor repairs, a short outage or when keeping the boiler on idle, a hot lay-up is preferred.

With either method of lay-up, if significant deposits are present, the fireside should be cleaned. If water washing is undesirable, an oil dispensable magnesium-based additive can be added continuously for two weeks prior to shutdown to neutralize the corrosiveness of the deposits. During lay-up, the boiler should be inspected monthly to check for trouble spots and active corrosion sites.

Hot Lay-up/Boiler Idle

For hot lay-up, metal surfaces should be kept at 170°F or higher to prevent moisture in the system. The temperature can be controlled by using an auxiliary heat source.

Natural gas or electric air heaters can be used to maintain boiler temperatures of 170°F. Circulation of hot blowdown water through the boiler waterside may be used if enough blowdown water is available to keep fireside surfaces dry.

Cold Lay-up

The potential for corrosion is much greater with cold lay-up because of the lower temperatures. A metal surface below 300°F with 10 ppm SO_3 present will be cool enough to cause condensation of sulfuric acid, opening the door to corrosion. During cold lay-up the metal temperatures are usually far below 300°F, so the conditions are perfect for sulfuric acid formation.

To prevent this acidic corrosion, wash down the boiler fireside surfaces with water when the unit is off-line and the WATER temperature has dropped below 140°F. A five percent solution of an alkaline chemical like soda ash can be used to neutralize acidic deposits. Washing removes the ash and impurities which can contribute to corrosion. Drain all wash water from the boiler.

Metal surfaces should be kept dry by using heat lamps, desiccants, or dry warm air circulation. Seal the furnace to prevent moist air or rain from entering.

CHAPTER VI

STEAM BOILER BLOW-OFF AND BLOWDOWN SYSTEMS

GENERAL

Blow-off and blowdown piping is defined as a piping connected to a boiler and provided with valves through which water in the boiler may be blown out under pressure. It is not intended to apply to piping such as is used on water columns, gage glass or feedwater regulators.

Both low pressure boiler (maximum allowable operating pressure of 15 psig) and high pressure power boilers (allowable operating pressure above 15 psig) should adhere to the blow-off and blowdown procedure outlined by the boiler manufacturer and/or the chemical treatment company involved and in accordance to the boiler blowdown equipment installed.

Bottom blow-off systems are operated intermittently to remove accumulated sediment, such as sludge and accumulated matter, which has settled to the bottom of the boiler.

Surface blowdown systems may be operated intermittently, continuously or automatically in response to changes in the conductivity of the boiler water, or a boiler water analysis, to remove foam, suspended and dissolved solids, etc from the surface, of the water in a boiler.

BOTTOM_BLOW-OFF SYSTEMS

The following tabulation lists the minimum bottom blow-off valves that are required to meet the ASME Boiler and Pressure Vessel Code.

Type Boiler	Valve Required
Low Pressure Steam Boiler (15 psig maximum pressure)	One Slow Opening Valve
Steam Power Boiler with One Blow-off Pipe (Operating pressure above 15 psig)	Two Slow Opening Valves or One Slow Opening Valve and One Quick Opening Valve
Steam Power Boiler with Two Blow-off Pipes (Operating pressure above 15 psig)	Single Master Valve on the Common Blow-off Pipe and One Valve on Each Individual Blow-off Pipe, either the Master Valve or the Individual Valves shall be of the Slow-Opening Type

The slow-opening valve requires at least five 360 degree turns of the operation mechanism to change from fully closed to fully opened position. The blow-off valves should never be opened so quickly to cause shock to the valve and piping system. Valves should always be fully opened before closing.

Manually operated valves are sufficient for bottom blow-off on the majority of both low and high pressure steam boilers. In order to obtain efficient bottom blow-off operation, however, proper chemical treatment of the boiler water must be maintained.

When two blow-off valves are used the following sequence of operation should be considered.

1. When using one quick-opening valve and one slow-opening valve, the quick - opening valve is opened first and closed last. This is to prevent shock to the piping system.

2. When using two slow-opening valves follow the boiler manufacturers operating instructions.

The blow-off piping fitting(s) on the boiler is always located at the lowest water section of the boiler in order to remove sediment and be able to completely drain the boiler. The blow-off pipe size cannot be less than 1 inch and not more than 2 ½ inches in diameter. Too small a pipe might stop up; while too large a pipe would discharge the water too rapidly.

The quantity of blow-off operations necessary to remove sediment and to maintain proper water condition should be minimized. Unnecessary blow-offs result in wasteful discharge of energy and increases the quantity of make-up water required.

Bottom blow-off involves high flow rates for short periods of time whereby heat recovery is not economically feasible based on equipment cost and small potential savings.

SURFACE BLOWDOWN SYSTEMS

Normally only one surface blowdown pipe located below the waterline is required to properly maintain the water quality of a firetube steam boiler.

On a lower pressure steam boiler (15 psig maximum pressure) a manually operated surface blowdown is usually sufficient. When frequent blowdowns are required, however, an automatic type blowdown system should be considered.

The surface blowdown on high pressure boilers (over 15 psig operation pressure) is usually made on a continuous basis. This consists of a manual orifice type of valve, which is adjusted by hand to control the quantity of blowdown that is to be continuously discharged, based on a water analysis. An automatic shutoff valve synchronized with the burner control will discontinue the blowdown when the burner is off.

Blowdown systems that are fully automatic are also available for high pressure boilers.

Several of these types are listed below.
1. Timer actuated valve synchronized with the burner control.
2. Two position (open/closed) valve controlled by a conductivity sensor.
3. Modulating valve controlled by a conductivity sensor.
4. Thermostatic control valve.

The automatic systems can substantially reduce the total amount of blowdown, thus reducing both fuel and chemical cost. It also eliminates the wide swings in the level of total dissolved solids, which occurs with manual control.

Heat recovery equipment should be installed on continuous and automatic surface blowdown lines. By using blowdown heat to preheat the incoming make-up water, substantial fuel savings can be realized and the city and state sewer code requirements can be met.

BOTTOM BLOW-OFF AND SURFACE BLOWDOWN SYSTEMS

Observe the city and state codes that may regulate the temperature at which blow-off and blowdown water can be discharged into a sewer system. A blow-off/blowdown separator and cooler, a blow-off/blowdown tank or a sludge settling tank may be required for compliance to the codes, especially when high pressure boilers are involved.

CHAPTER VII

DAILY BOILER LOG

The following list is meant as instructions for filling out the daily boiler log.

1) This log sheet is a daily sheet that is divided into sections for each of 3 shifts.
2) The operator for each shift should sign his name or initials on the top line of each section.
3) The time line is for the operator to record the time he takes his readings.
4) Steam flow readings should be taken twice a shift. The units, lb./hr or percent load, are typical. Whichever is chosen, it should be used consistently.
5) Make-up water flow should be recorded as a total for the period. This number is necessary to compute steam-to-fuel efficiencies and, when compared to steam flow, will also help determine the amount of condensate being returned.
6) Feedwater temperature readings can be taken by a temperature gage installed in the feedwater line prior to the feedwater pump. This reading is also necessary to compute steam-to-fuel efficiency.
7) Boiler continuous blowdown settings should also be taken and recorded at least twice a shift.
8) The line for Boiler Bottom Blow is divided into 2 boxes-yes and no. The operator should circle the appropriate response.
9) The fuel meter reading, necessary to calculate efficiencies and verify fuel consumption, should be taken once each shift.
10) The hardness and amount of water passing through each softener should be recorded once per shift. It the hardness exceeds recommended levels, it should be regenerated immediately.
11) The total hardness of the feedwater is extremely important as this determines the potential for scaling. These tests must be conducted once per shift and appropriate action taken if the hardness exceeds recommended levels. Softener regeneration or tracing down and repairing hard water leaks into the condensate system are the appropriate actions.
12) Condensate quality is just as important as softened water quality to boiler cleanliness. The operator should test pH for corrosion potential, total hardness and conductivity for leaks into the system.
13) There are chemical tests that must be conducted once per shift on the boiler water to prevent scaling, corrosion and/or carryover. Suggested tests are:
    - Scale treatment - phosphate, chelate and/or polymer levels
    - Sodium sulfite - to prevent oxygen corrosion.
    - "P" alk. - alkalinity for corrosion and carryover control
    - "M" alk. - alkalinity for corrosion and carryover control
    - Chlorides - for blowdown and carryover control
    - Conductivity - for blowdown and carryover control
14) The amount of chemical treatment added should be recorded for inventory control.
15) The boxes labeled Maintenance are available for operators to record any items requiring maintenance. Leaky pump seals, broken gages, or plugged strainers are typical examples.

CHAPTER VIII

STEAM QUALITY

BOILER WATER AND FEEDWATER

The amount of TDS in the boiler water depends on the type of feedwater treatment that is used. However, for any given feedwater condition control of TDS in the boiler water is by blowdown. The type of treatment will depend on the source of the feedwater, its constituents and steam generator requirements.

The feedwater treatment can include water softeners, demineralizers and/or polishers to eliminate hardness, silica, other dissolved solids, and suspended solids. Organic material ingress control equipment may also be provided. A deaerating heater is also included to minimize the dissolved oxygen. The feedwater treatment should be compatible with the boiler water treatment and other cycle requirements.

It should be noted that systems, which include steam turbines, and superheaters, would require higher purity feedwater than referenced in this document. In the case of steam turbines, the manufacturer of the turbine to be used should define the steam quality requirement needed from the boiler. It should further be noted that steam quality requirements could differ between the various turbine manufacturers. Thus it is important that the various equipment manufacturers (boiler, turbine, water treatment, etc.) be selected, and communicate at an early stage in the project with the owners representative regarding steam quality and water treatment requirements, in order to avoid later problems.

The type of boiler water treatment usually varies with the operating pressure of the boiler, the quality of the feedwater, and the boiler design. A "caustic phosphate" treatment is often used with feedwater having high solids, generally in boilers operating at lower pressures. This treatment provides the chemical conditions necessary to cope with residual hardness and other scale forming constituents.

Chelant treatments may be used with operating pressures up to about 1500 psig. With this treatment it is essential that oxygen in the feedwater be reduced to the lowest possible levels through mechanical and chemical deaeration. It is also essential that the boiler be protected from oxygen during any outage periods.

A "Coordinated Phosphate" treatment may be used at any operating pressure but is generally used with boilers having high purity feedwater and operating at high pressures. The phosphate treatment precipitates the hardness compound and also controls the alkalinity and pH.

A "Zero Solids" or "All Volatile" treatment does not add any dissolved solids to the boiler. The pH in the complete cycle is controlled by volatile amines such as ammonia,

morpholine and Cyclohexylamine. The zero solids treatment may be used at all operating pressures in those boilers having very high purity (low solids) feedwater. However, this treatment does not provide any corrosion protection of the boiler whenever the feedwater becomes contaminated. Accordingly, users of this treatment should be prepared to inject Phosphate in the boiler water or remove the boiler from service whenever there are condenser leaks or other contamination.

Chemical scavenging of oxygen may use sodium sulfite or a volatile oxygen scavenger such as hydrazine for boilers operating at pressures up to 1500 psig. Only volatile oxygen scavengers should be used at pressures above 1500 psig.

Inadvertent entry of organic materials, for example oils, detergents and sugars, not specifically intended for water treatment may cause foaming, carryover, carry under or deposits. Special treatment and operating techniques may be required to prevent such entry. These techniques may include: Monitoring of condensate returns especially from process systems, and installation of oil separators, filters, etc. When feedwater is used for spray control of steam temperature, the feedwater TDS must not exceed 1 ppm. Therefore, feedwater treatment chemicals should be volatile.

If solid type chemicals, such as sodium sulfite, must be used for boiler water or feedwater treatment, they should be injected downstream of the spray water takeoff. Other boiler water chemicals should be injected via the boiler chemical feed connection.

It is the responsibility of the plant operator to provide proper feedwater and boiler water conditions which must reflect the particular requirements of each installation.

Consultation with boiler manufacture and water treatment specialists will be beneficial in formulating a proper water treatment system.

RECOMMENDED BOILER WATER LIMITS

Table 3 lists boiler water limits for firetube boilers.

Table 4 lists boiler water limits for watertube boilers

These recommendations were developed by considering the following:

a. Type of feedwater generally available.

b. Type of boiler water treatment normally utilized for the specific pressure.

c. Effect of the dissolved solids in the steam on the boiler and other plant components.

d. The general performance of steam drum intemals. At the higher pressures, the lower boiler water limits reflect the increased difficulty of steam/water separation and the increased volatility of soluble compounds.

e. Boiler water alkalinity limits. Below 1000 psig alkalinity concentrations were selected as 1/5 of boiler water total solids to reduce the potential for excessive foaming. Above 1000 psig, the high purity (low solids) feedwater normally used eliminates the significance of any alkalinity limits. This is also true where high purity feedwater is used below 1000 psig.

f. Vaporous carryover of sodium becomes significant in the pressure range of 2601 to 2900 psig. .

g. For a once-through boiler, the steam purity is essentially equal to feedwater purity.
The recommended TDS and alkalinity limits assume no operating practice to achieve the associated values of steam purity. It may be possible to operate with higher values and still achieve satisfactory steam purity depending on the feedwater constituents and plant operating conditions.

The fractional carryover (FCO) values listed in Table 4 can be used to estimate maximum boiler water (BW) concentration limits consistent with required steam dissolved solids (TDS) and sodium limits down to 0.050 ppm TDS and down to 0.005 ppm sodium.

BW Sodium = Steam Sodium FCO

BW TDS = Steam TDS + FCO

This formula does not apply to silica or other species subject to exceptional vaporous carryover, which is undiminished by devices installed to remove moisture from the steam.

It must be realized that the highest boiler water total dissolved solids limit for any of the pressure ranges in boilers operating below 1000 psig is based on present day practice and is consistent with softened feedwater. If a value lower than the maximum solids concentration in the boiler water is dictated by steam purity needs, improved feedwater purity (demineralization) and/or increased boiler water blowdown may be required.

Above the 1000 psig pressure range with the reduced total solids in the boiler water, foaming is not a consideration. Alkalinity will be dependent on the type of boiler water treatment employed. The feedwater required for these boiler pressure ranges is of demineralized quality.

EXAMPLE

The desired purity of steam will be chosen as required for turbine protection, superheater protection, or process requirements. The table and formula are then used to estimate achievable carryover and the required boiler water purity. For example, if a boiler with a drum pressure of 500 psig is to provide steam containing less than 0.5 ppm dissolved solids, then the maximum recommended solids in the boiler water is 1250 ppm.

$$\text{ppm BW TDS} = \text{Steam TDS} + \text{FCO}$$
$$1250 \text{ ppm} = 0.5 + 0.0004$$

RECOMMENDED FEEDWATER LIMITS FOR ONCE-THROUGH BOILERS

For once-through boilers, the steam purity is equal to the feedwater purity. The maximum recommended feedwater dissolved solids concentration is 0.050 ppm.

CARRYOVER

Carryover is a relative term which is used to describe entrainment of boiler water in the steam. Since it is impossible to completely separate boiler water from steam, carryover will occur in any boiler. Since the degree of carryover or entrained boiler water, which can be tolerated, will vary with process requirements or operating conditions, it may be more accurate to simply define the steam quality which may be required for trouble free operation.

Saturated steam is normally generated in commercial installations. Barring unusual requirements, saturated steam quality for commercial installations is usually less stringent than that required for superheated steam which is commonly required in industrial processes. This greater latitude can be used to an advantage when considering commercial steam boiler system operation.

BOILER SERVICE

The type of system or steam use will largely determine the required steam quality. With saturated steam, the percent moisture may be of greater concern than the actual dissolved solids concentration. However, solids are more easily measured than percent moisture, so solids will be referred to as target values.

Boilers are typically designed, and tested, to deliver to system saturated steam not less than 98% steam quality. Stringent steady state control of operating parameters are employed by manufacturers when factory testing for boiler overall efficiency and performance. Many factors affect boiler steam quality performance in any system in which a boiler is commissioned. To name but a few, operating pressure, critical load, firing rate, water quality, boiler lead design, system design, operation, preventive maintenance and ancillary support system operation and maintenance are all contributing factors in yielding satisfactory steam quality performance.

Where saturated steam is used in cogeneration or turbine driven auxiliaries, lower moisture content should be considered. This is because impingement of water droplets on the turbine blades will cause erosion, and this may eventually cause considerable damage. However, such steam use can still tolerate above average total dissolved solids. For such systems, steam solids should be restricted below a maximum of 3 ppm, corresponding to approximately 0.1 percent moisture.

Humidification steam quality requirements are not critical in most applications. The usual concern is over the presence of odors in the steam, which may be imparted into the humidified air. However, there are processes where very high standards must be met. In most of these cases, the quantity of steam required is small. The use of a separate steam source is often the best solution.

PRESSURE

The specific volume of steam increases as the pressure decreases. In other words, a steam bubble at low pressure will occupy a larger volume than one of equal weight at high pressure. This can have an important influence on steam quality, because the steam release space in low pressure boilers should be greater than that provided in a higher pressure boiler with the same generating capacity.

This space is important because it is one of the factors that control the separation of moisture or water droplets from steam. Operating conditions that affect this, such as high water level, will promote mechanical entrainment of boiler water in the steam.

Load changes, which cause sudden pressure drops, will also have an adverse effect on steam quality. The pressure drop will cause flashing of boiler water into steam because of the reduction in boiling point. The sudden demand for additional steam will add to the turbulence in the steam release space, and this combination will cause excessive moisture to be entrained in the steam.

SAMPLING PROCEDURE

While it may be possible to evaluate the causes of carryover with improper sampling techniques, the true steam quality can only be defined by observing suitable precautions. Recommendations contained in ASTM Standard D 1066 should be followed to insure accurate sampling. Steam sampling nozzles based on these specifications are illustrated in Figures 6 through 8.

RELATION TO BOILER WATER

Since there are many factors that contribute to carryover, it is not possible to establish finite limitations. However, boiler water characteristics can be influential in controlling steam purity.

The following tabulation lists recommended maximum concentrations that may be obtained in the absence of other factors that may have to be considered in achieving the desired steam quality.

TABLE 3

RECOMMENDED BOILER WATER CONCENTRATION FOR FIRETUBE BOILERS

Boiler Pressure psig	Total Dissolved Solids ppm	Total Alkalinity ppm as $CaCO_3$	Suspended Solids[2] max. ppm	Silica[1] ppm	Total Iron[1] max. (Fe) ppm
0 – 250	5000 - 3500	1200 - 900	100	150 - 100	10
251 – 350	4000 – 3000	900 - 700	25	120 – 100	8
351 - 500	3000 - 2500	800 - 600	10	80 - 50	5

NOTES:
(1) Maximum values may not be achievable due to plant operating conditions or feedwater characteristics
(2) Critically affected by operating conditions and year of boiler manufacture

TABLE 4.
RECOMMENDED BOILER WATER LIMITS
AND ESTIMATES OF CARRYOVER LIMITS THAT CAN BE ACHIEVED

CONDITIONS FOR WHICH "FCO" IS VALID					
Drum Pressure psig	**Maximum Boiler Water Solids ppm**	**Steam TDS Corresponding to Max. BW TDS ppm**	**Maximum Total Alkalinity ppm as $CaCO_3$**	**Maximum Suspended Solids ppm**	**Maximum FCO, Fractional Carryover *(Note 2)***
0 - 300	3500	1.0	*(Note 1)*	15	0.0003
301 – 450	3000	1.0	"	10	0.0003
451 – 600	2500	1.0	"	8	0.0004
601 - 750	1000	0.5	"	3	0.0005
751 – 900	750	0.5	"	2	0.0006
901 - 1000	625	0.5	"	1	0.0007
1001 – 1800	100	0.1*	Not Applicable *	1	0.001
1801 - 2350	50	0.1*	"	1	0.002
2351 – 2600	25	0.05*	"	1	0.002
2601 - 2900	15	0.05*	"	1	0.003

(Note 1) 20% of Actual Boiler Water Solids. For TDS ≤ 100 ppm, the total alkalinity is dictated by the boiler water treatment.

(Note 2) Does not include vaporous silica carryover

Day: Date:

Daily Boiler Water Log

Readings to be taken at the Start of shift - Action shall be taken to correct deficiencies prior to End of shift.

Operator	**1st Shift**						**2nd Shift**						**3rd Shift**					
Time																		
Steam Header Pressure																		
#1 Boiler Steam Flow																		
#2 Boiler Steam Flow																		
#3 Boiler Steam Flow																		
Make-up Water Gal.																		
Feedwater Temp. Deg. F																		
#1 Boiler Control Setting	From		To		Total Hours		From		To		Total Hours		From		To		Total Hours	
#2 Boiler Control Setting	From		To		Total Hours		From		To		Total Hours		From		To		Total Hours	
#3 Boiler Control Setting	From		To		Total Hours		From		To		Total Hours		From		To		Total Hours	
	#1 Boiler		#2 Boiler		#3 Boiler		#1 Boiler		#2 Boiler		#3 Boiler		#1 boiler		#2 Boiler		#3 boiler	
Boiler Bottom Blow	Yes	No	Yes	No	Yes	No	Yes	No	Yes	No	Yes	No	Yes	No	Yes	No	Yes	No
Fuel Meter (Gal)(Cu.Ft)																		
	Gal.	Total Hardness		Total Hardness		Total Hardness	Gal.	Total Hardness		Total Hardness		Total Hardness	Gal.	Total Hardness		Total Hardness		Total Hardness
Softener #1																		
Softener #2																		
Boiler Feedwater																		
	pH	Total Hardness	Conductivity				pH	Total Hardness	Conductivity				pH	Total Hardness	Conductivity			
Condensate																		
	Scale Treatment	Sodium Sulfite	"P" Alk.	"M" Alk.	Chlorides	Conductivity	Scale Treatment	Sodium Sulfite	"P" Alk.	"M" Alk.	Chlorides	Conductivity	Scale Treatment	Sodium Sulfite	"P" Alk.	"M" Alk.	Chlorides	Conductivity
Boiler #1																		
Boiler #2																		
Boiler #3																		
Amount of Chemical Treatment (Lb.) (Gal.)	Scale Inhibitor		Sodium Sulfite		Cond. Treatment		Scale Inhibitor		Sodium Sulfite		Cond.Treatment		Scale Inhibitor		Sodium Sulfite		Cond. Treatment	
	Maintenance						Maintenance						Maintenance					

STEAM SAMPLING NOZZLE
MULTIPORT TYPE

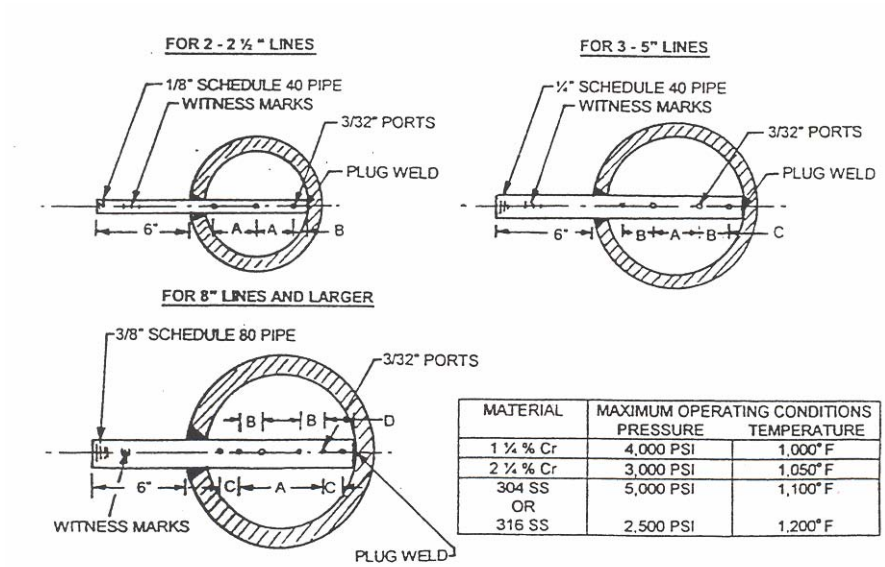

MATERIAL	MAXIMUM OPERATING CONDITIONS PRESSURE	TEMPERATURE
1 ¼ % Cr	4,000 PSI	1,000° F
2 ¼ % Cr	3,000 PSI	1,050° F
304 SS OR 316 SS	5,000 PSI	1,100° F
	2,500 PSI	1,200° F

1 Multiport sampling nozzle is recommended for sampling saturated steam or superheated steam in larger tubes or lines.
2 Sampling nozzle should be same as material of construction as the line
3 Locate nozzle in line where steam flow is vertically downward or, as a second choice, vertically upward. When nozzle must be installed in a horizontal line, install vertically downward from top or, as an alternate, horizontally inward from side.
4 Position nozzle so steam flows into ports directly.
5 Nozzle should not be located immediately after a bend or fitting that affects the flow of steam.
6 Nozzle dimensions shown below are in inches.
7 Isokinetic sampling rate (ML/MIN) = Sample factor x Steam rate (M lb/hr) through line

DIMENSIONS FOR MULTIPORT SAMPLING NOZZLE

Nominal Size of Line (Extra Heavy)	Internal Diameter	Pipe Size of Nozzle	Number of Ports in Nozzle	A	B	C	D	Sample Factor (K)
2	1.94	1/8	3	11/16	1/8			53
2 ½	2.32	1/8	3	13/16	1/8			37
3	2.90	¼	4	1 1/16	11/16			31
3 ½	3.36	¼	4	1 1/8	13/16			24
4	3.83	¼	4	1 ¼	13/16			18
5	4.81	¼	4	1 3/8	1 1/16			11
6	5.76	¼	4	2 1/8	1 7/16			8.2
8	7.63	3/8	5	2 ¼				6.3
10	9.0	3/8	5	2 3/8	2			4.2
12	11.0	3/8	5	3 1/16	2 1/8			2.9
14	13.0	3/8	5	3 13/16	2 ½			2.36
16	15.0	3/8	5	4 1/8	3 1/8			1.85
18	17.0	3/8	5	5	3 ½			1.45
20	19.0	3/8	5	5 1/8	3 13/16			1.20

FIGURE 6

STEAM SAMPLING SYSTEM

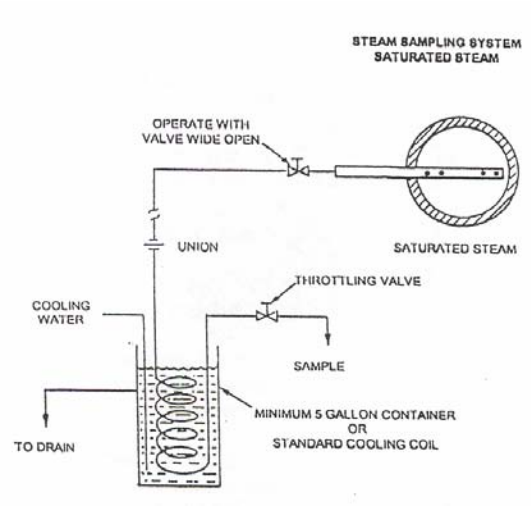

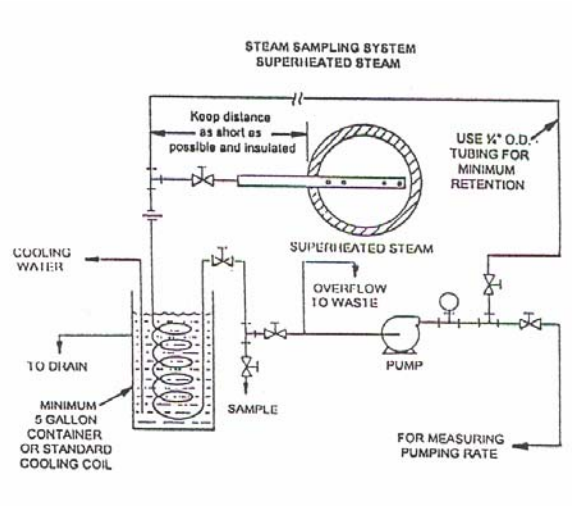

NOTES

1 When sampling nozzle is a single port type, use a minimum of ¼ inch (outside diameter) tubing for the line to the cooling coil.

2 When the sampling nozzle is 3-port or 4-port, use minimum of 3/8 inch (outside diameter) tubing or ¼ inch piping for the sampling line. In the case of a 6-port nozzle, the line is to be a minimum of ½ inch (outside diameter) tubing or 3/8 inch piping.

3 Soft copper tubing may be used for saturated steam at pressures below 260 psig. When pressure exceeds 260 psig, line is to be 304 or 316 stainless steel tubing or piping.

4 Cooling coil is to be fabricated with not less than 30 feet of 3/8 inch (outside diameter) tubing suitable for steam conditions.

NOTES

1 Superheated steam must be desuperheated as close to the sampling nozzle as possible by condensate recirculated from a condensing coil

2 Line between steam header and point of desuperheating must be insulated

3 When sampling nozzle is 3-port or 4-port, use a minimum of 3/8 inch (outside diameter) 304 or 316 stainless tubing, or ¼ inch steel piping. In the case of a 6-port nozzle, the line is to be ½ inch (outside diameter) 304 or 316 stainless tubing or 3/8 inch steel piping.

4 Cooling coil is to be fabricated with not less than 30 feet of 3/8 inch (outside diameter) tubing suitable for steam conditions

FIGURE 7

STEAM SAMPLING NOZZLE
SINGLE PORT TYPE

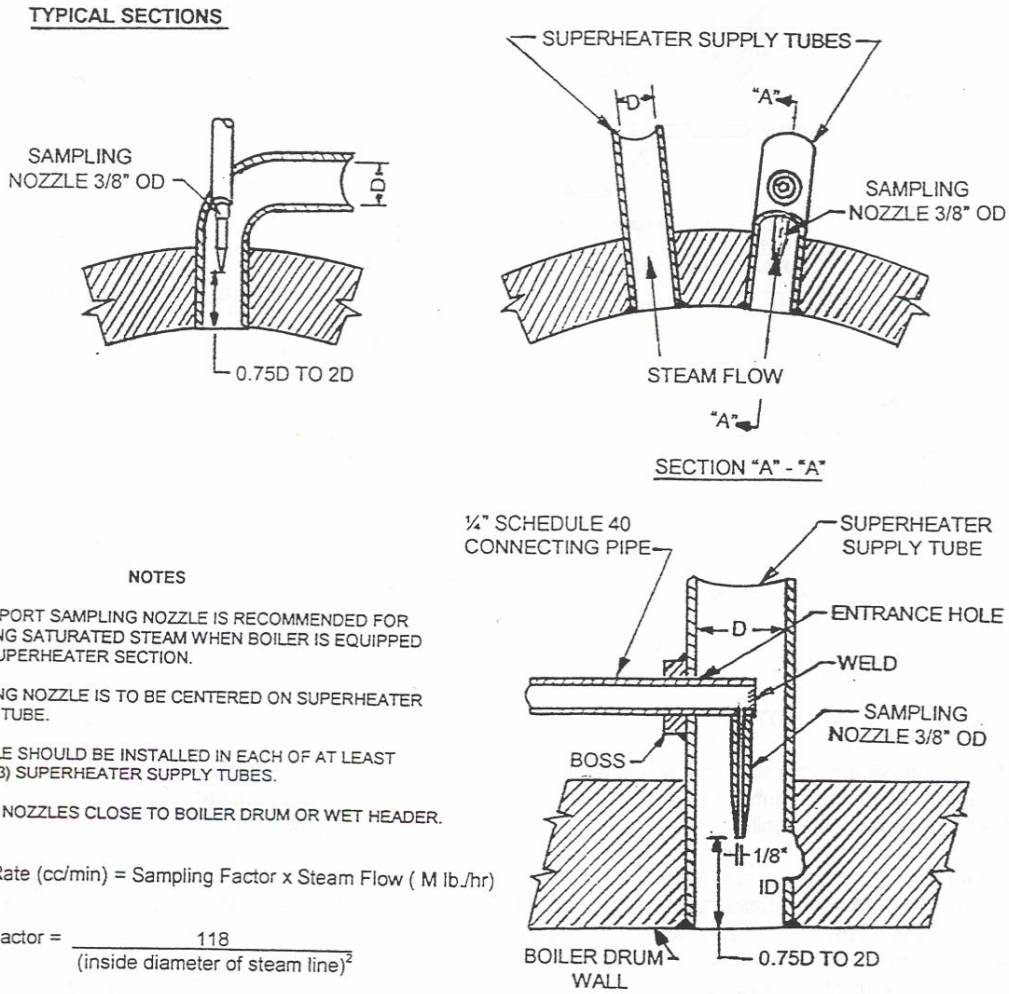

NOTES

1. SINGLE PORT SAMPLING NOZZLE IS RECOMMENDED FOR SAMPLING SATURATED STEAM WHEN BOILER IS EQUIPPED WITH SUPERHEATER SECTION.
2. SAMPLING NOZZLE IS TO BE CENTERED ON SUPERHEATER SUPPLY TUBE.
3. A NOZZLE SHOULD BE INSTALLED IN EACH OF AT LEAST THREE (3) SUPERHEATER SUPPLY TUBES.
4. LOCATE NOZZLES CLOSE TO BOILER DRUM OR WET HEADER.

Isokinetic Rate (cc/min) = Sampling Factor x Steam Flow (M lb./hr)

$$\text{Sampling Factor} = \frac{118}{(\text{inside diameter of steam line})^2}$$

FIGURE 8

CHAPTER IX

ELECTRIC BOILERS
SPECIAL CONSIDERATIONS FOR WATER TREATMENT

GENERAL

Electric boilers are comprised of two types: Immersion Element (Resistance type), and the Electrode type. Of the two, the Electrode boiler will require a greater awareness of the water quality and treatment control for proper operation. The difference between the two types of boilers is in the manner which electric energy (kW) is converted into thermal energy (Btuh), and in the way thermal energy is transferred to the water.

In Immersion Element boilers, electricity flowing through a resistance wire generates heat. This heat is transferred from the element wire to the sheath, and then to the water by conduction.

Electrode boilers use the water surrounding the electrodes as the resistance necessary to create heat. As an alternating current is applied on the electrodes the current passing through the water generates heat due to the electrical resistance created by the water.

The primary problem associated with immersion units would be control of scaling and maintaining dissolved solids low enough to prevent foaming and carryover in steam boilers. It should be noted that in immersion type units, the metal surfaces must be heated to temperatures higher than the water in order to promote heat transfer. Since scaling is a function of surface metal temperatures, water hardness must be controlled.

Water treatment for immersion units should be the same as discussed for fossil fuel fired boilers in this publication. As a minimum, all immersion units should have a water softener connected to the make-up water supply. The pH of the boiler water should be maintained above 8. Oxygen control should be done externally or, at least, by chemical scavenging. As a minimum, Table 5 should be used as a guideline for water conditioning in the boiler.

ELECTRODE BOILERS

A critical requirement for Electrode boilers is proper water treatment. One should contact a water treatment consultant and the specific boiler manufacturer for water conditioning guidelines. The make-up water should be carefully analyzed noting that the analysis must take water variations into account. Variations in water quality may occur from multiple water sources, municipality water treatment, percent and type of condensate return, amount of make-up, etc. The water treatment program must be capable of handling the entire range of water quality.

Water softeners are a must for make-up in hot water and steam systems. It should be noted that softeners reduce only hardness and do not reduce alkalinity or silica concentrations. It is possible that a demineralizer may be required.

Since electrode boilers operate on the principle that water conducts electricity, it is essential to maintain the range of proper conductivity. It is also necessary to ensure that the entire system (steam or water) is clean.

The higher the conductivity, the more current the water will be able to carry at a constant voltage. If conductivity is too high, current concentrations may reach levels at which electrodes erode.

Total dissolved solids will cause foaming if conductivity is too high providing short circuit paths from the electrodes to ground which can cause current surges and boiler off-line failures.

On the other hand, if conductivity is too low, the boiler may not operate properly. Therefore, conductivity must be monitored and controlled. High conductivity may be controlled by continuous blowdown. The amount will be determined by the conductivity of the boiler water. Bottom blowdown will be required on a daily basis to remove sludge.

TYPES OF TREATMENT

The water for all boilers must have proper treatment for hardness, pH, O_2 and conductivity. The treatment selected will be dependent upon the application and manufacturer's specific recommendations along with a qualified water consultant. As a minimum, the following should be assured:

A. Conductivity - As noted before, proper blowdown is required. If blowdown does not provide proper conductivity, chemical additives may be required.

   In hot water electrode boilers, the conductivity must be maintained at the proper level for the operating temperature, kW output, applied voltage and the boiler design. It is important that the iron content is as low as possible and pH controlled within the specific guidelines.

   High voltage boilers may require demineralized water to provide the proper conductivity levels. Boilers operating below 600V usually do not require demineralized water.

B. Scale - It is recommended that the control of scale be done primarily by ion-exchange and not by chemical means. Total chemical addition for scale control could have detrimental effect on conductivity levels or foaming. Therefore, as noted before, water softeners are a must to reduce hardness to near zero. Alkalinity should be maintained high enough to keep the silica in solution and removed through blowdown.

C. Corrosion - In all boilers the control of O_2, CO_2 and alkalinity is very important. It is recommended that mechanical deaeration be used for the removal of oxygen from the boiler feedwater. Sodium sulfite or organic oxygen scavengers should be used as a feed to the boiler as the final oxygen scavenger. Organic materials may be preferred where conductivity requirements are low or TDS must be limited.

In electrode boilers using porcelain insulators, the control of alkalinity and CO_2 is important because of their potential to attack the porcelain. This does not mean that these boilers will not tolerate any alkalinity or CO_2, but that excess CO_2 and alkalinity should not be permitted to occur. It is the excess that causes the problems.

D. External Treatment - As a minimum, a softener must be employed to remove as much hardness as possible. If the raw water contains excessive hardness and alkalinity, the softened water can be fed into a chloride-anion dealkalizer.
In general, mechanical deaeration is recommended. Reverse osmosis and demineralizers should be employed if justified by an economic and water quality analysis.

E. Internal Treatment - Chemical treatment must take into account the conductivity levels. Any chemicals added must consider the affects on conductivity and it should be noted that excessive chemicals might promote operating problems and failures. Refer to Table 6 for guidelines.

INSTALLATION AND START UP

Start-up for electric boilers should follow the same guidelines set forth in this publication for fossil fuel boilers. All boilers and systems must be cleaned prior to initial use.

TABLE 5
WATER CONDITION GUIDELINES FOR RESISTANCE TYPE BOILERS
(NOTE 1)

Type of Boiler	Feedwater Hardness ppm	Boiler Water					
		pH	Alkalinity ppm	Iron ppm	Conductivity µ mohs	TDS ppm	Oxygen cc/liter
Immersion Element	< 3	> 8.0	< 700	< 3.0	< 7000	<3500	0.005 Max.

Note 1
Values given are considered starting points. Consult with specific boiler manufacturer for proper values for the specific boiler model and type.

TABLE 6
WATER CONDITIONING GUIDELINES FOR ELECTRODE TYPE BOILERS
(NOTE 2)

Type of Boiler	Feedwater Hardness ppm	Boiler Water					
		pH	Alkalinity (Total) ppm	Iron ppm	Conductivity[3] µ mohs	TDS ppm	Oxygen cc/liter
Low Voltage	< 3	8.5 - 10.5	< 400	< 0.5	< 3000	< 750	0.005
High Voltage	< 0.5	8.5 – 10.5	< 400	< 0.5	Manufacturers recommendations	Note 1	0.005

Note 1
TDS is dependent on the amount of blowdown and frequency. Limits should be determined after operation analysis is made by a feedwater consultant.

Note 2
Values given are considered starting points. Consult with specific boiler manufacturer for correct values for the specific boiler model and type.

Note 3
Conductivity required or allowed is design dependent. Boiler manufacturer's instructions must be followed.

CHAPTER X

DEFINITIONS AND GLOSSARY

ABSOLUTE PRESSURE - Pressure above zero, the sum of the gage and atmospheric pressures.

ACIDITY - Represents the amount of free carbon dioxide, mineral acids and salts (especially sulfates or iron and aluminum) which hydrolyze to give hydrogen ions in water and is reported as milli-equivalents per liter of acid, or ppm acidity as calcium carbonate, or pH the measure of hydrogen ions concentration.

ACID CLEANING - The process of cleaning the interior surfaces of steam generating units by filling the unit with a dilute acid accompanied by an inhibitor to prevent corrosion, and by subsequently draining, washing and neutralizing the acid by a further wash of alkaline water.

AIR VENT - A valved opening in the top of the highest drum of a boiler or pressure vessel for venting air.

ALKALINITY - Represents the amount of carbonates, bicarbonates, hydroxides and silicates or phosphates in the water and is reported as grains per gallon, or ppm as calcium carbonate. Total alkalinity is measured by titration to the Methyl Orange pH 4.5 end point.

ALLOWABLE WORKING PRESSURE - The maximum pressure for which the boiler was designed and constructed; the maximum gage pressure on a complete boiler and the basis for the setting on the pressure relieving devices protecting the boiler.

AMBIENT TEMPERATURE - The temperature of the air surrounding the equipment.

AMINE - Chemical used to control corrosion in condensate systems. Classified as filming or neutralizing.

ANION EXCHANGER - An ion exchange device, which removes alkalinity, and sulfate when regenerated with salt. It removes sulfate, chloride and nitrate when regenerated with caustic soda. This process may also remove silica.

ASME BOILER AND PRESSURE VESSEL CODE - The boiler and pressure vessel code of the American Society of Mechanical Engineers with amendments and interpretations thereto made and approved by the council of the Society.

BLOWDOWN - Removal of a portion of boiler water for the purpose of reducing concentration, or to discharge sludge.

BLOWDOWN VALVE - A specifically designed, manually operated valve connected to the boiler for the purpose of intermittently reducing the concentration of solids in the boiler or for draining purpose.

BLOW-OFF SEPARATOR - A vented and drained container equipped with internal baffles or an apparatus for the purpose of separating moisture from flash steam as it passes through the vessel.

BLOW-OFF VALVE - A specially designed, manually operated valve connected to the boiler for the purpose of intermittently reducing the concentration of solids in the boiler or for draining purposes.

BOILER - A closed vessel in which water is heated, steam is generated, steam is superheated, or any combination thereof, under pressure or vacuum by the application of heat. The term does not include such facilities that are an integral part of a continuous processing unit but shall include units supplying heating or vaporizing liquids other than water where these units are separate from processing systems and are complete within themselves.

> *Watertube* - A boiler in which the tubes contain water and steam, the heat being applied to the outside surface.
>
> *Bent Tube* - A watertube boiler consisting of two or more drums connected by tubes, practically all of which are bent near the ends to permit attachment to the drum shell on radial lines.
>
> *Horizontal* - A watertube boiler in which the main bank of tubes are straight and on a slope of 5 to 15 degrees from the horizontal.
>
> *Sectional Header* - A horizontal boiler of the longitudinal or cross drum type, with the tube bank comprised of multiple parallel sections, each section made up of a front and rear header connected by one or more vertical rows of generating tubes and with the sections or groups of sections having a common steam drum.
>
> *Box Header* - A horizontal boiler of the longitudinal or cross drum type consisting of a front and rear inclined rectangular header connected by tubes.
>
> *Cross Drum* - A sectional header or box boiler in which the axis of the horizontal drum is at right angles to the center lines of the tubes in the main bank.
>
> *Longitudinal Drum* - A sectional header or box header boiler in which the axis on the horizontal drum or drums is parallel to the tubes in a vertical plane.
>
> *Low Head* - A bent tube boiler having three drums with relatively short tubes in a vertical plane.
>
> *Firetube* - A boiler with straight tubes, which are surrounded by water and steam and through which the products of combustion pass.

Horizontal Return Tubular - A firetube boiler consisting of a shell, with tubes inside the shell attached to both end closures. The products of combustion pass under the bottom half of the shell and return through the tubes.

Locomotive - A horizontal firetube boiler with an internal furnace the rear of which is a tube sheet directly attached to a shell containing tubes through which the products of combustion leave the furnace.

Horizontal Firebox - A firetube boiler with an internal furnace the rear of which is a tube sheet directly attached to a shell containing tubes. The first-pass bank of tubes is connected between the furnace tube sheet and the rear head. The second-pass bank of tubes, passing over the crown sheet, is connected between the front and rear end closures.

Refractory Lined Firebox - A horizontal firetube boiler, the front portion of which sets over a refractory or water-cooled refractory furnace, the rear of the boiler shell having an integral or separately connected section containing the first-pass tubes through which the products of combustion leave the furnace, then returning through the second-pass upper bank of tubes.

Vertical - A firetube boiler consisting of a cylindrical shell, with tubes connected between the top head and the tube sheet that forms the top of the internal furnace. The products of combustion pass from the furnace directly through the vertical tubes.

NOTE: Submerged Vertical is the same as the plain type above, except that by use of a water leg construction as a part of the upper tube sheet, it is possible to carry the water-line at a point above the top ends of the tubes.

Scotch Boiler - A cylindrical steel shell with one or more cylindrical internal steel furnaces located (generally) in the lower portion and with a bank or banks (passes) or tubes attached to both end closures. NOTE: In Stationary Service, the boilers are either of the Dry-Back, or Wet-Back Type. In Marine Service, the boilers are generally of the Wet-Back Type.

BOILER BLOW-OFF PIPING - The piping connections from the boiler to the blow-off valves.

BOILER BLOW-OFF TANK - A vented and drained container into which water is discharged above atmospheric pressure from a boiler blow-off line.

BOILER, HIGH-PRESSURE - A boiler furnishing steam at pressure in excess of 15 pounds per square inch (103 kPa) or hot water at temperatures in excess of 250° F (121°C) or at pressures in excess of 160 pounds per square inch (1100 kPa).

BOILER, HIGH-TEMPERATURE HOT WATER - A water heating boiler operating at a pressure exceeding 160 psig (1100 kPa) or temperatures exceeding 250°F (121°C).

BOILER HORSEPOWER - The evaporation of 34.5 lb. (15.663 kg) of water per hour from a temperature of 212°F (100°C) into dry saturated steam at the same temperature. Equivalent to 33,470 Btu/hr. (98,000 W).

BOILER, LOW-PRESSURE HOT-WATER AND LOW-PRESSURE STEAM - A boiler furnishing hot water at pressures not exceeding 160 pounds per square inch (1100 kPa) or at temperatures not more than 250° F (121°C) or steam at pressures not more than 15 pounds per square inch (103 kPa).

BOILER WATER - A term construed to mean a representative sample of the circulating water, after the generated steam has been separated and before the incoming feedwater or added chemical becomes mixed with it so that its composition is affected.

BOILING OUT - The boiling of highly alkaline water in boiler pressure parts for the removal of oils, greases, etc. prior to normal operation or after major repairs.

BYPASS - A passage for a fluid, permitting a portion or all of the fluid to flow around certain heat absorbing surfaces over which it would normally pass.

CALCIUM CARBONATE ($CaCO_3$) - Usually the chief constituent of boiler scale. Hardness and alkalinity are usually reported as the calcium carbonate equivalent.

CARBON DIOXIDE (CO_2) - The most common cause of corrosion in return condensate systems.

CARRYOVER - The boiler water solids and liquid entrained with the steam.

CATION EXCHANGER - An ion exchange device, which removes hardness from water when regenerated with salt. It removes both hardness and alkalinity when regenerated with acid.

CHEMICAL FEED PIPE - A pipe inside a boiler drum through which chemicals for treating the boiler water are introduced.

CIRCULATION - The movement of water and steam within a steam generating unit.

COMMERCIAL BOILER - A boiler, which produces steam or hot water primarily for heating in commercial applications with incidental use in process applications. Commercial boilers come in a wide range of types, sizes, capacities, pressures and temperatures. They may also be supplied for more than one application.

CONCENTRATION - (1) The weight of solid contained in a unit weight of boiler or feedwater. (2) The number of times that the dissolved solids have increased from the original amount in the feedwater to that in the boiler water due to evaporation in

generating steam.

CONDENSATE - Condensed water resulting from the removal of latent heat from steam.

CONDUCTICITY - The property of a water sample to transmit electric current under a set of standard conditions. Usually expressed as Micromhos conductance.

CONTINUOUS BLOWDOWN - The continuous removal of concentrated boiler water from a boiler to reduce total solids concentration in the remaining water..

CONTROL - Any manual or automatic device for the regulation of a machine to keep it at normal operation. If automatic, the device is motivated by variations in temperature, pressure, water level, time, light or other influences.

CORROSION - The wasting away of metals due to chemical action in a boiler usually caused by the presence of H_2, O_2, CO_2 an acid or strong alkalies.

DEAERATION - Removal of air and gases from boiler feedwater prior to its introduction to a boiler.

DEALKALIZATION - An ion exchange process used to remove alkalinity from water. This is done with either a cation resin using sulfuric acid regeneration, or an anion resin using sodium chloride regeneration.

DEGASIFICATION - Removal of gases from samples of steam taken for purity tests. Removal of CO_2 from water in the ion exchange method of softening.

DEMINERALIZER - An ion exchange device used to remove solids from water.

DESIGN LOAD - The load for which a steam generating unit is designed, usually considered the maximum load to be carried.

DESIGN PRESSURE - The pressure used in the design of a boiler for the purpose of determining the minimum permissible thickness or physical characteristics of the different parts of the boiler.

DESIGN STEAM TEMPERATURE - The temperature of steam for which a boiler, superheater or reheater is designed.

DISENGAGING SURFACE - The surface of the boiler from which steam is released.

DISSOCIATION - The process by which a chemical compound breaks down into simpler constituents, as do CO_2 and H_2O at high pressure or temperature.

DISSOLVED GASES - Gases, which are in solution in water.

DISSOLVED SOLIDS - Those solids in water that are in solution.

DRAIN - A valved connection at the lowest point for the removal of all water from the pressure parts.

DRY STEAM - Steam containing no moisture. Commercially dry steam containing not more than one half of one percent moisture.

ECONOMIZER - A heat recovery device designed to transfer heat from the products of combustion to boiler feedwater.

EFFICIENCY - The ratio of output to the input. The efficiency of a steam generating unit is the ratio of the heat absorbed by water and steam to the heat in the fuel fired.

ELECTRIC BOILER - A boiler in which electric heating serves as the source of heat.

ENTRAINMENT - The conveying of particles of water or solids from the boiler water by the steam.

EXTERNAL TREATMENT - Treatment of boiler feedwater prior to its introduction into the boiler.

FEEDWATER - Water introduced into a boiler during operation. It includes make-up and return condensate.

FEEDWATER TREATMENT - The treatment of boiler feedwater by the addition of chemicals to prevent the formation of scale or eliminate other objectionable characteristics.

FILMING AMINE - An organic chemical which forms a water repellant film when steam condenses. The film controls corrosion in the condensate system.

FIRE TUBE - A tube in a boiler having water on the outside and carrying the products of combustion on the inside.

FLASHING – Steam produced by discharging water at a temperature greater than the saturation temperature corresponding to the pressure of the space to which it is discharged.

FLASH TANK – See Boiler Blow-off Tank

FOAMING - The continuous formation of bubbles which have sufficiently high surface tension to remain as bubbles beyond the disengaging surface.

FORCED CIRCULATION - The circulation of water in a boiler usually by a pump or pumped as contrasted to natural circulation.

GAGE COCK - A valve attached to a water column or drum for checking water level.

GAGE GLASS - The transparent part of a water gage assembly connected directly or through a water column to the boiler, below and above the water line, to indicate the water level in the boiler.

GAGE PRESSURE - The pressure above atmospheric pressure.

HANDHOLE - An opening in a pressure part for access, usually not exceeding 6" in longest dimension.

HARDNESS - A measure of the amount of calcium and magnesium salts in boiler water. Usually expressed as grains per gallon or ppm or $CaCO_3$.

HARD WATER - Water which contains calcium or magnesium in an amount which requires an excessive amount of soap to form lather.

HYDRATE ALKALINITY - A measure of caustic or sodium hydroxide in water.

INDUSTRIAL BOILER - A boiler which produces steam or hot water primarily for process applications for industrial use with incidental use for heating. Industrial boilers cover a wide range of sizes, capacities, pressures and temperatures. They may also be supplied for more than one application (co-generation, etc.).

INHIBITOR - A substance which selectively retards a chemical action. An example in boiler work is the use of an inhibitor, when using acid to remove scale, to prevent the acid from attacking the boiler metal.

INTERMITTENT BLOWDOWN - The blowing down of boiler water at intervals.

INTERNAL TREATMENT - The treatment of boiler water by introducing chemical directly into the boiler.

ION - A charged atom or radical which may be positive or negative.

ION EXCHANGE - A reversible process by which ions are interchanged between solids and a liquid with no substantial structure changes of the solid.

MAKE-UP - The water added to boiler feed to compensate for that lost through exhaust, blowdown, leakage, etc.

M ALKALINITY - Sometimes called total alkalinity. Test uses methyl orange indicator.

MANHOLE - The opening in a pressure vessel of sufficient size to permit a man to enter.

MECHANICAL CARRYOVER – The dissolved solids in entrained water droplets that are carried out in the saturated steam.

MOISTURE IN STEAM - Particles of water carried in steam usually expressed as the percentage by weight.

NATURAL CIRCULATION – The circulation of water in a boiler caused by differences in density due to temperature variations in the boiler water. Sometimes referred to as thermal, thermally induced, or thermal-siphon circulation.

NEUTRALIZING AMINE - Alkaline organic chemical which neutralizes the acidity of condensate to control corrosion.

OXYGEN ATTACK - Corrosion or pitting in a boiler caused by oxygen.

PACKAGED BOILER - See Packaged Steam Generator.

PACKAGED STEAM GENERATOR - A boiler equipped and shipped complete with fuel burning equipment, mechanical draft equipment, automatic controls and accessories. Usually shipped in one or more major sections.

P ALKALINITY - A measure of carbonate and hydrate alkalinity using phenolphthalein indicator.

pH - The hydrogen ion concentration of a water to denote acidity or alkalinity. A pH of 7 is neutral. A pH above 7 denotes alkalinity while one below 7 denotes acidity. This pH number is the negative exponent of 10 representing hydrogen ion concentration in grams per liter. For instance, a pH of 7 represents 10^{-7} grams per liter.

PITTING - A concentration attack by oxygen or other corrosion chemicals on a boiler, producing a localized depression in the metal surface.

ppm - Abbreviation of parts per million. Use in chemical determinations as one part per million parts by weight.

PRECIPITATE - To separate materials from a solution by the formation of insoluble matter by chemical reaction. The material which is removed.

PRESSURE VESSEL - A closed vessel or container designed to confine a fluid at a pressure above atmospheric.

PRIMING – A condition in which excess quantities of water are carried along with the steam to the steam outlet.

PROCESS STEAM – Steam used for industrial purposes other than for producing power or for space heating.

PURITY - The degree to which a substance is free of foreign materials.

RATE CAPACITY - The manufacturer's stated capacity rating for mechanical equipment, for instance, the maximum continuous capacity in pounds of steam per hour for which a boiler is designed.

RATE OF BLOWDOWN - A rate normally expressed as a percentage of the incoming water.

RAW WATER - Water supplied to the plant before treatment.

RESIDENTIAL BOILER - A boiler which produces low pressure steam or hot water primarily for heating applications in living quarters of private dwellings.

SAFETY VALVE - A spring loaded valve that automatically opens when pressure attains the valve setting. Used to prevent excessive pressure from building up in a boiler.

SAMPLING - The removal of a portion of a material for examination or analysis.

SATURATED STEAM - Steam at the pressure corresponding to its saturation temperature.

SATURATED WATER - Water at its boiling point.

SATURATION TEMPERATURE - The temperature at which evaporation occurs at a particular pressure.

SCALE - A hard coating or layer of chemical materials on internal surfaces of boiler pressure parts.

SCOTCH BOILER - See Boiler.

SECONDARY TREATMENT - Treatment of boiler feedwater or internal treatment of boiler water after primary treatment.

SEDIMENT - Matter in water which can be removed from suspension by gravity or mechanical means.

SHELL - The outer cylindrical portion of a pressure vessel.

SILICA IN STEAM – Occurs primarily from the vaporization of silica in boiler water and is a function of drum operating pressure and boiler water pH. It can be estimated from industry accepted silica distribution curves or measured directly.

SLUDGE - A soft water-formed sedimentary deposit which normally can be removed by blowing down.

SLUG - A large "dose" of chemical treatment applied internally to a steam boiler intermittently. Also used sometimes instead of "priming" to denote a discharge of water out through a boiler steam outlet in relatively large intermittent amounts.

SODIUM SULFITE - Oxygen scavenger commonly used in boiler and hot water heating systems.

SOFTENING - The act of reducing scale forming calcium and magnesium impurities from water.

SOFT WATER - Water which contains little or no calcium or magnesium salts, or water from which scale forming impurities have been removed or reduced.

SOLUTION - A liquid, such as boiler water, containing dissolved substances.

STAGNATION - The condition of being free from movement or lacking circulation.

STEAM - The vapor phase of water substantially unmixed with other gases.

STEAM GENERATING UNIT - A unit to which water, fuel and air or wasteheat are supplied and in which steam is generated. It can consist of a boiler furnace, and fuel burning equipment, and may include as component parts waterwalls, superheater, reheater, economizer, airheater, or any combinations thereof.

STEAM PURITY - The degree of contamination. Contamination usually expressed in ppm.

STEAM QUALITY - The percent of weight of vapor in a steam and water mixture.

STEAM SEPARATOR - A device for removing the entrained water from steam.

SUPERHEAT - To raise the temperature of steam above its saturation temperature. The temperature in excess of its saturation temperature.

SUPERHEATED STEAM - Steam at a higher temperature than its saturation temperature.

SURFACE BLOW-OFF - Removal of water, foam, etc. from the surface of the water in a boiler.

SURGE - The sudden displacement or movement of water in a closed vessel or drum.

SUSPENDED SOLIDS - Undissolved solids in boiler water.

SWEAT - The condensation of moisture from a warm saturated atmosphere on a cooler surface. A slight weep in a boiler joint but not in sufficient amount to form drops.

SWELL - The sudden increase in the volume of the steam in the water steam mixture which causes an apparent increase in the water level in the steam space. Caused by temporary reduction in pressure on the surface of the water due to a rapid increase in steam demand.

TOTAL DISSOLVED SOLIDS IN BOILER WATER (TDS) – The concentration of dissolved solids and is usually expressed in ppm (parts per million by weight). It is usually estimated from conductivity or sodium concentration measurements (ASTM D2186)

TOTAL DISSOLVED SOLIDS IN STEAM – Is the sum of the boiler water (BW) solids from vaporous and mechanical carryover and the concentration is usually expressed in ppm. The total dissolved solids in the saturated steam, excluding silica, can be estimated from the measured concentration of sodium (vaporous and mechanical) in the condensed sample as shown in the following expression:

$$\text{Steam TDS} = \frac{\text{BW TDS x Steam Sodium}}{\text{BW Sodium}}$$

TOTAL SOLIDS CONCENTRATION - The weight of dissolved and suspended impurities in a unit weight of boiler water, usually expressed in ppm.

TREATED WATER – Water which has been chemically and/or mechanically treated to make it suitable for boiler feed.

TURBIDITY - The optical obstruction to the passing of a ray of light through a body **of** water, caused by finely divided suspended matter.

VAPOR - The gaseous product of evaporation.

VAPOROUS CARRYOVER – Is the total concentration of compounds appearing in the saturated steam by direct vaporization from the boiler water and is unaffected by moisture separators installed in or following the steam drum.

VENT - An opening in a vessel or other enclosed space for the removal of gas or vapor.

WATER COLUMN - A vertical tubular member connected at its top and bottom to the steam and water space respectively of a boiler, to which the water gage, gage cocks and high and low level alarms may be connected.

WATER GAGE - The gage glass and its fittings for attachment.

WATER LEG - A vertical or nearly vertical box header, sectional header or water-cooled sides of an internal firebox composed of flat or circular surfaces.

WATER LEVEL - The elevation of the surface of the water in a boiler.

WATER TUBE - A tube in a boiler having the water and steam on the inside and heat applied to the outside.

WATER VAPOR - A synonym for steam usually used to denote steam of low absolute pressure.

WEEP - A term usually applied to a minute leak in a boiler joint, which forms droplets (or tears) of water very slowly.

WETNESS - A term used to designate the percentage of water in steam. Also used to describe the presence of a water film on heating surface interiors.

WET STEAM - Steam containing moisture.

ZEOLITE SOFTENER - See Cation Exchanger.

REFERENCES

1. AMERICAN SOCIETY OF MECHANICAL ENGINEERS, "Sc-1 Section VI - Care of Power Boilers" Section IV, Part C7.300 Laying Up of Boilers (Revised, 1980).

2. Beecher, J. and Lane, R, "Guidelines for Lay-up of Boilers and Their Auxiliaries", Proc. International Water Conference, Engineers Society Western Pennsylvania, 42 (1981).

3. AMERICAN SOCIETY OF MECHANICAL ENGINEERS, "Boiler Lay-up Procedures", Boiler Lay-up Task Group for Industrial Subcommittee of the ASME Research Committee on Water in Thermal Power Systems, (1982).

4. American Boiler Manufacturers Association, “Boiler Water Requirements and Associated Steam Purity for Commercial Boilers (1998)

5. American Boiler Manufacturers Association, "Boiler Water Limits and Achievable Steam Purity for Watertube Boilers", Fourth Edition - 1995.

6. Babcock & Wilcox Company, "Steam, Its Generation and Use".

7. Combustion Engineering, "Combustion - Fossil Power Systems".

8. AMERICAN SOCIETY OF MECHANICAL ENGINEERS, “Consensus on Operating Practices for the Control of Feedwater and Boiler Water Chemistry in Modern Industrial Boilers”, Feedwater Quality Task Group for the Industrial Subcommittee of the ASME Research and Technology Committee on Water and Steam in Thermal Systems

9. American Boiler Manufacturers Association, “Handbook of Power, Utility and Boiler Terms and Phrases”, Sixth Edition