# Training Material

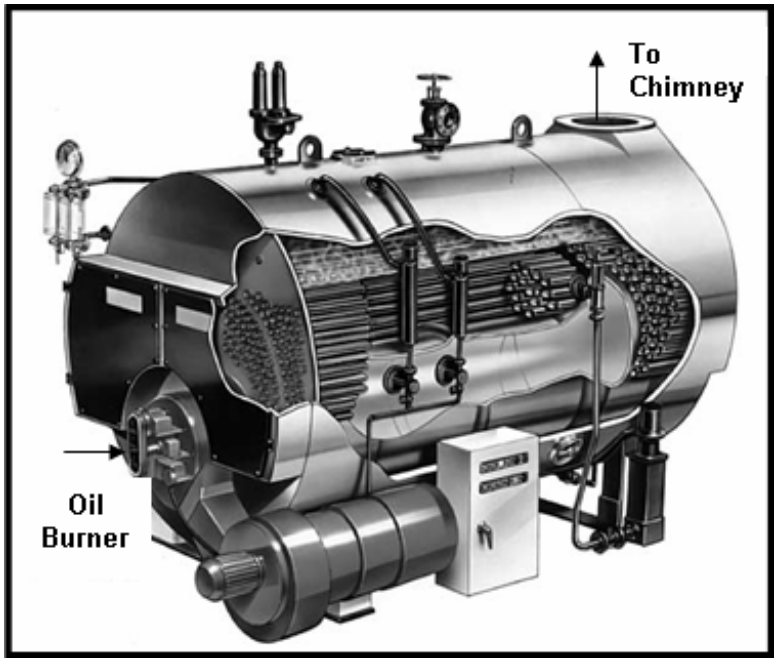


## BOILER TROUBLE SHOOTING

**CONTENTS**


1. Chlorine Induced High Temperature Super Heater Corrosion in Biomass Power Plant
2. Fine Tuning a CFBC Boiler
3. Literature on Boiler Tube Fit up by Expanding
4. Lesson Learnt from Troubleshooting
5. Natural Circulation in Boiler
6. Preservation of Boilers
7. Boiler Failure Due to Over sizing of Boiler Feed Pump
8. Article on Gauge Glass Level Fluctuations
9. Fans at Work in boilers
10. Erosion Phenomenon in Boilers
11. Effect of Air Ingress in Boilers
12. A freak incident of Bed Super Heater Failure
13. Design of Fluidized bed combustion boilers for multifuels
14. Economizer Failure in a high pressure boiler
15. Circulation Failure in Boilers
16. Dose the right amount of Chemicals
17. Case Studies on Boiler Tube Erosion
18. Ideal Drum Internal Arrangement
19. Why the water level in gauge glass keeps oscillating
20. Why the non return Valve Flutters
21. Auditing energy system effectively
22. Tips to improve availability & Efficiency of atmospheric Bubbling fluidized Bed Combustion Boiler
23. Air heater for Industrial Boilers
24. Bank Tube failure in a distillery
25. Consideration in changing over from oil fired boiler to solid fuel fired boiler
26. Art of Bed Management in AFBC Boilers
27. Thermal Expansion of Boiler

28. Visit to Penthouse
29. Troubleshooting water carry over in boilers
30. Caustic Gauging in bed tube in high pressure AFBC Boilers
31. Agro Fuels & Boiler Availability

# CHLORINE INDUCED HIGH TEMPERATURE SUPERHEATER CORROSION IN BIOMASS POWER PLANTS

## *INTRODUCTION*

There are many Biomass based power plants installed in the past 10 years in India for independent power production and export to grid. There are varieties of biomass being used in these plants. There are three types of biomass. First is the woody biomass, which covers all tress such juliflora, eucalyptus, casuarinas, cashew tree and many more forest trees & country trees. Secondly agro wastes such as rice husk, ground nut shell, bagasse, Coconut shell, coconut fronds, mustard stalk, mustard husk which are basically rejected material of our grain / food processing. Specifically grown grasses fall under third category. These biomasses have certain constituents which cause damage to boiler pressure parts by corrosion mechanism. I happened to study some biomass fired boilers which have suffered damage due to corrosion mechanism. In this paper the case studies are presented for readers understanding along with the fundamental mechanism behind this failure.

## *CASE STUDY 1*

The 35 TPH, 65 kg/cm2g, 485 deg C traveling grate bi drum boiler was under shut at the time of visit. The Boiler is for the 7.5 MW power plant meant for export to grid. The boiler was commissioned in March 2006. The boiler is provided with separate coal firing & biomass feeding arrangements. The two number mechanical spreaders are for the coal and the three number pneumatic spreaders are for biomass. The heat duty split is supposed to be for 70% biomass and 30% coal.

The fuels fired include bamboo chips, Julia flora, all types of country wood, Coconut fiber shell, Coconut trash stem, Ground nut shell, Saw dust, rice husk, bagasse, cashew shell. The boiler is designed with a secondary superheater without a screen tube protection. The superheater arrangement of the boiler is shown in figure 1. The plant had been suffering from frequent superheater failure in the final superheater. The final superheater is arranged in parallel flow to flue gas.

At the time of site visit, a portion of secondary superheater in the final loop was cut and inspected. The superheater coils were inspected insitu and found to be coated with lot of ash deposits. The soot blower had been in service. Yet it did not seem to have helped removal of ash deposits. The ash deposit when removed the coil revealed the undergoing corrosion. See the photographs 1 to 4 revealing the corrosion of superheater. The failures have been taking place almost every week.

I explained to customer that the chlorine containing fuels damage superheater. The superheater was not designed for taking care of chlorine effect in biomass fuels.

## *CASE STUDY 2*

The biomass based power plant is of 1 x 25 MW capacity. The boiler parameters are 100 TPH, 106 kg/cm2, 530 deg C. The design feedwater temperature is 175 deg C. The boiler is designed with sloped fixed grate with steam assisted grate de-ashing system. The boiler is required to accept varieties of biomass fuels. The fuel list is quite extensive. The boiler had been facing corrosion failures in final Superheater & erosion failures in economiser. In the previous year the PLF was very much affected by the superheater tube failures. The power plant was basically operated on ground nut shell, saw dust, rice husk, forest wood. At times Coconut fronds were fired when there

was acute fuel shortage.

The failed tubes were available for inspection. The hotter portion of final SH was found corroded. The cause of corrosion is the use of chlorine based biomass fuels. The combination of sodium, potassium & chlorine produce accelerated corrosion when the steam temperature exceeds 450 deg C. This corrosion mechanism is well understood by European biomass boiler designers & users, whereas, Indian boiler makers are not aware of this. The steam temperature is limited to 450 deg C in biomass fired units. Moreover the Superheater tubes are to be positioned in low gas temperature zone. The superheaters are positioned in 3$^{rd}$ pass as per the experience of the Europeans. This reduces the fouling of sodium / potassium in SH sections. The photographs of corroded tubes can be seen in annexure.

At time of visit all the final stage superheater coils were under replacement. I advised not to use chlorine based biomass. This included coconut fronds, coconut shell. I advised to use non chlorine fuels for 10 days so that the ash condensation on superheater will be only sodium / potassium sulfates & silicates. Also I advised not to use the soot blower as it will expose the superheater to fresh chorine containing flue gas.

***CASE STUDY 3***

The power plant is a 10 MW biomass based power plant commissioned in April 2008. The main steam parameters are 66 kg/cm2 & 485 deg C. The continuous operation was not possible due to high generation cost in the first year. During the first year the main fuel was cashew tree. It was learnt that the plant would have been in operation for about 30 days before the continuous operation began.

The plant was started for continuous operation from March 2009. Co firing of Indonesian coal & & varieties of woody biomass including casuarinas tree & eucalyptus was started in March 2009. There had been two instances of tube leakages from radiant SH at hot ends near the bottom soot blower after the continuous operation began. Two failures took place on in May 2009.

The failed superheater tubes clearly indicated the corrosion phenomenon due to chlorine containing fuels. Since this boiler is equipped with coal firing capability I advised for high ash coal firing so that totally the fly ash gets modified. The photographs of the failed tubes are presented in the annexure.

***THE PHENOMENON OF CHLORINE CORROSION***

During combustion of biomass or any other fuel, the chlorine, sulfur together with alkali metals such as Sodium & potassium are released as vapors in flue gas. The chlorine levels in fuels can be seen in table 1. When they pass over convection tubes, the vapors are condensed as submicron particles. Then over the condensed particles further deposition take place. As the thickness of deposits grows, the deposits indicate that they are in molten form at zone where the gas temperature is above 700 deg C. When the boiler is shut & inspected, we do see ash flowing like a liquid at high temperature area. It looks like lumpy deposits further down. At economiser we may find fine dust sticking to tubes. This is well presented by Bryers in a figure shown in annexure.

| Table 1: Average Chlorine Content in various Fuels (% Dry Mass basis) | | | |
|---|---|---|---|
| Wood | 0.08-0.13 | Municipal Waste | 0.05-0.25 |
| Bark | 0.02-0.4 | RDF | 0.3-0.8 |
| Straw | 0.1-1.5 | Packages | 1-4 |
| Refuse Dump Gas | 0.005 | Car Tyres | 0.05-0.07 |
| Textiles | 0.25 | Auto Shredder Dust | 0.5-2 |
| Newspaper | 0.11 | Computer Parts | 0.1-0.5 |
| Sewage Sludge | 0.03-1 | Plastic Waste | 3.5 |
| PVC | 50 | Medical Waste | 1-4 |

The condensation of alkalis has been proven at lab scale studies & field studies. The finer particles contain more potassium, sulfur and chlorine while refractory elements such as silica & alumina dominate in larger size particles. Chlorine and alkalis (sodium & potassium) causes corrosion either by molecular chlorine ($Cl_2$), Hydrogen chloride (HCl) or by alkali chlorides (NaCl, KCl).

- Corrosion by HCl is limited to furnace where reducing conditions (sub-stochiometric) prevail. This can happen at furnace tubes only.
- Corrosion due to $Cl_2$ does not occur in SH area as the concentration is not high.
- Alkali chlorides however lead to a concentration mechanism of chloride at high temperature SH area. This is explained in figure 3. The molten state of alkali chlorides makes thing worse. All the chemical reactions now take place much faster.

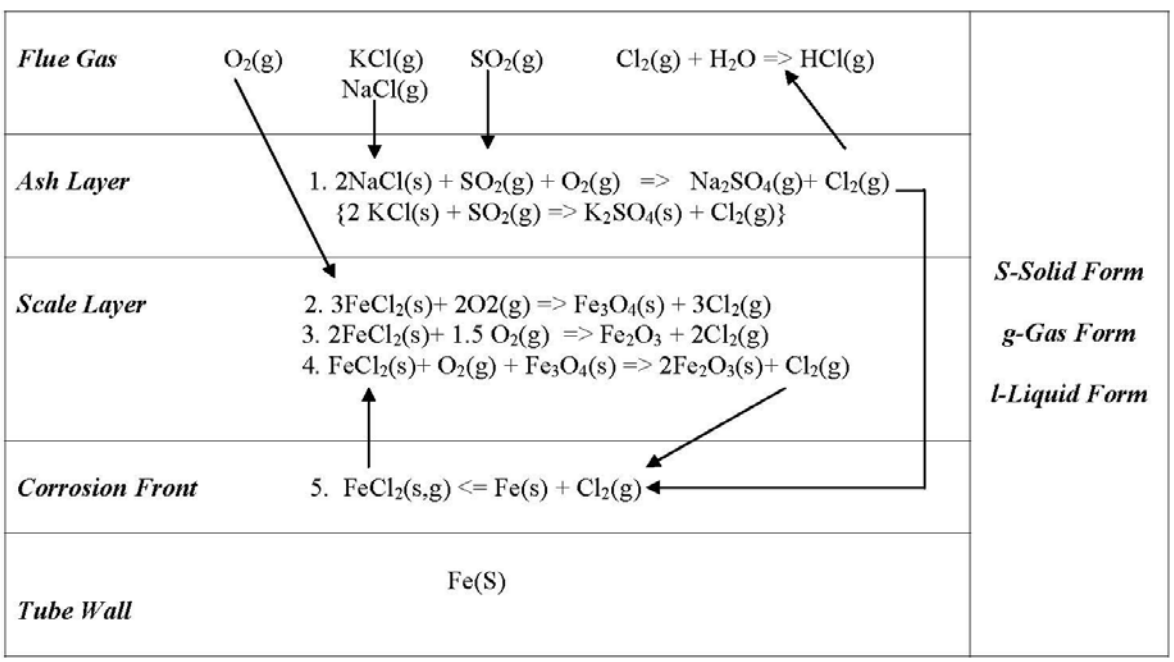


**Take a look at the above figure to know what happens at the Superheater?**

*At the flue gas layer*

We have $O_2$, KCl, $SO_2$, in gaseous form as generated from the furnace. The $Cl_2$ gas can combine with $H_2O$ in flue gas and make HCl in gas form. This can condense in low temperature area such as APH & Stack.

*At the Ash deposit layer*

We have NaCl (S) & KCl (S) in the solid form reacting with $SO_2$ (g) and releasing Chlorine gas. NaCl & KCl are in molten form at Superheater. The deposit which has condensed first on the tube may be in the solidified form. But subsequent deposits will be in liquid form as it is not cooled by the superheater. KCl melting temperature is 770 deg C and NaCl melting temperature is 801 deg C. The sulfation reaction leaves free chlorine available in the ash layer.

*At the corrosion front*

The chlorine at the molten layer & gases layer react with Fe in steel. This happens when the metal temperature is higher than 450 deg C. That is in the superheater where the metal temperature is high, the $FeCl_2$ is formed. The melting temperatures of some salts would be lower than gas temperature. At the corrosion front the binary mixtures of KCl – FeCl2 and NaCl-FeCl2. Systems have low temperature eutectics in the range of 340 – 390 deg C. That is, the local liquid phases can form within the deposits and react with metal oxides.

*At the scale layer*

The $FeCl_2$ which is released from parent metal is oxidized to $Fe_3O_4$ & $Fe_2O_3$ and release chlorine again. This is oxidation phenomenon which keeps releasing the chlorine again. Again the $Cl_2$ gas concentration leads to parent metal removal. The cycle of $FeCl_2$ formation & chlorine liberation continue until the parent metal develops a puncture. This is termed as memory effect by experts. That is the reason the metal which is peeled of is loose since it has layers of $Fe_2O_3$, $Fe_3O_4$ and $FeCl_2$.

## *APPROACHES TO SOLVE CHLORINE CORROSION*

### *Prevention by design*

To handle chlorine containing fuels, the superheater should be arranged where the NaCl & KCl becomes a solid form. This happens where the flue gas temperature reaches 650 deg C. Municipal waste fired boilers are designed in this way. They are known as tail end Superheater. One such boiler is already in operation in India with Municipal waste firing.

### *Co firing with high ash coal*

Firing high ash coal along with biomass will help to modify the ash chemistry. When the ash begins to condense, the acidic ash particles ($SiO_2$, $Al_2O_3$ particles) work as nuclei. This avoids the deposition of KCl & NaCl over the tubes. Further the acidic ash particles perform the cleaning action on KCl & NaCl deposits thus preventing the buildup. This action can not be done even by the soot blower.

### *Reducing the proportion of sodium / potassium content in ash by fly ash addition*

The biomass fuels typically contain large amount of sodium & potassium. With mixing of fuels that contain silica / alumina we can control the ash fusion / slagging / fouling temperature of the ash. In microscopic levels not all constituents of ash melt at the same temperature. It is the low melting temperature ash constituents melt first & trap the other part. If the proportion of silica & alumina part is raised, we can control the overall slagging/ fouling pattern. The same phenomenon occurs in coal –biomass co-fired FBC boilers. Indian coals provide this advantage unlike low ash coals. In co

firing the ash composition gets modified. This ash constituent modification can be varied by injecting coal based power plant fly ash along with biomass fuel. There may be a possibility of the reducing the fouling nature of ash in the final SH section.

Coal ash of Indian coal from power plant would have high silica & alumina & the ash fusion temperature is +1200 deg C. As biomass contains less ash, the ash chemistry modification would be easier with as low as 10% ash by weight to present fuel. The fly ash injection process must be commenced immediately after the replacement of new SH coils. After 6 months we need to assess the corrosion damage. The ash modification may prevent / reduce the formation of KCl & NaCl which is the main factor for Chlorine corrosion. Adding fine sand also should help to modify the ash deposit content.

***Fouling by purely sodium based biomass***

As the coils are replaced new, do not commence the use of chlorine based fuels immediately. WE can allow deposits on the SH tubes with purely Sodium based ash for few days. Fuels such as coffee husk & GN shell would help to foul the SH tubes with sodium based foulants. Sodium silicates will be the first deposits content in that case. Rice husk mix will also help in building ash layer that is free of Later we may start using the combination of fuels with Chlorine containing fuels. The soot blower in final SH area must not be operated. The chlorine corrosion is more when its partial pressure is more than the oxygen at the base metal, i.e., Fe. If we build up the non chlorine ash layer then the chlorine may not be able to diffuse easily in to the oxidized iron.

***Protection by metal spray / metal bond coating***

The covering the SH coils by nickel may increase the life of the coils as the iron is totally cut off from the chlorine contact. There are boiler companies who had tried the co-extruded tubes.

***Use of alloy steel of superior metallurgy***

A published literature says that the alloy AC66 is proven to be better for high metal temperature such as 650 deg C. Major tube manufacturers such as Mannessman / Wolvorine / Studsvik AB seemed to have austenitic stainless steels to of use in this corrosive atmosphere.

***Use of fire side additive***

Sulfur in fuel / flue gas is known to reduce the effect of chlorine corrosion. This was tried out in a plant at Barnala for tackling corrosion due to usage of cotton stalk. A separately sulfur feed system was incorporated. When the sulfur to chlorine molar ratio is maintained in excess of 4, the KCl & NaCl formation does not take place. The sulfates are formed as the sodium and potassium are released as vapor phase in the furnace. Chlorout is an additive developed for low chlorine fuels.

***Chlorine removal at before use***

Some reports are informing that leeching with hot water may bring down the chlorine content in the input fuel. This can help to reduce the problem to some extent. This needs to be established by conducting an experiment. This involves the treatment of samples of sized fuels in hot water of temperatures 50-90 deg C for different durations say from 1 minute to 5 minutes. We need to send these samples to laboratory for residual chlorine analysis. Depending on the extent & effectiveness of dechlorination, we can think of automation & reuse of water with suitable treatment.

***European experience***

Straw is a main fuel in Denmark. Straw fired plants are operational since 1989. Straw contains a maximum of 1.1% chlorine, 2.5% of Potassium, 0.2% of Sodium. Even this small percentage of chlorine has led to corrosion of superheater when steam temperature is more than 450 deg C. Here superheaters are excessively surfaced and is provided in platen form. Soot blowing is not done so that the ash layer builds to a level of melting point. The ash layers are never disturbed. The superheater material is chosen as TP 347. Air preheaters are designed with steam coil preheater arrangement to avoid plugging & corrosion. In addition the APH tubes are enameled to have additional corrosion protection.

***Lesson learnt***

Cofiring of biomass with coal is an ideal way to make use of biomass that is available near the plant location. Addition of fly ash from coal fired boiler or fine sand addition can also modify the behaviour of deposition and modify Boiler designers should review the location of superheater to avoid corrosion problems.

---

***References:***


1- The use of straw as energy source – www.dongenergy.dk
2- Corrosion in fire tube boilers of biomass combustion plants – by Mr.Rudolf Riedel


---

**ANNEXURE**

Case study 1 : Photo 1- The Superheater coils distorted due to spacer / support clamp corrosion failure.

Case study 1: Photo 2- Ash deposition over secondary Superheater. Tube showing corrosion when the ash is removed.

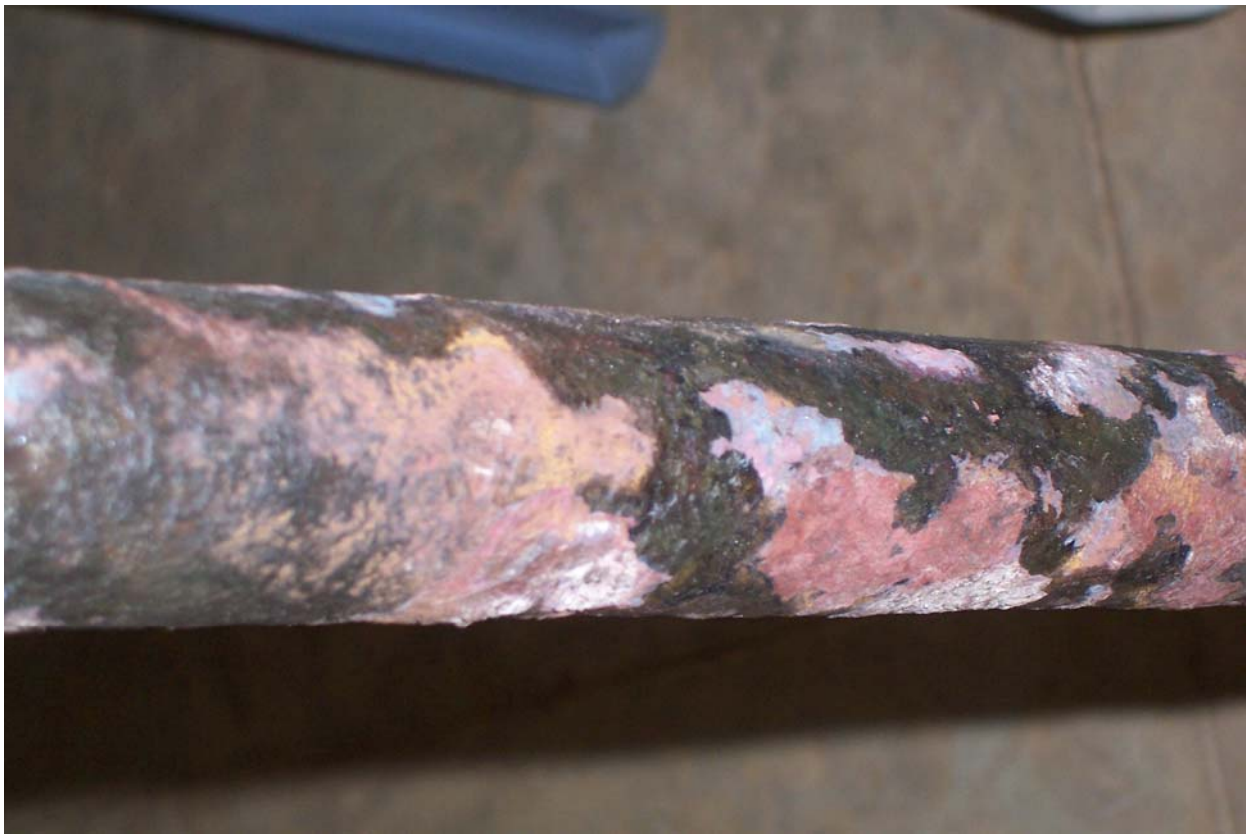

Case study 1: Photo 3- a portion of secondary superheater was cut & cleaned. The tube revealed under deposit external corrosion. There is no sign of overheating. However loose iron oxide was seen inside the tubes.

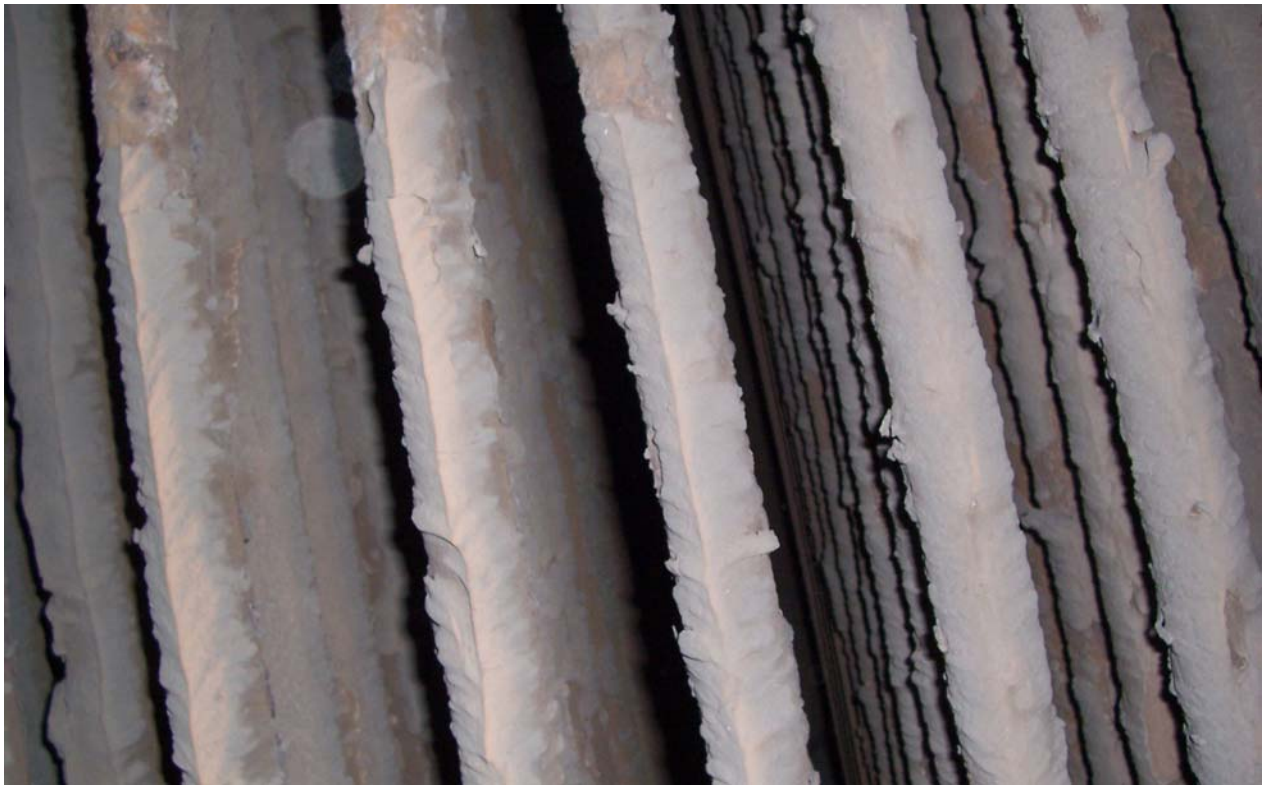

Case study 1: Photo 4- Ash deposition seen in primary Superheater. Since the DESH outlet temperature is 285 deg C, the steam temperature at last stage of primary superheater must be higher and thus attracting ash deposits.

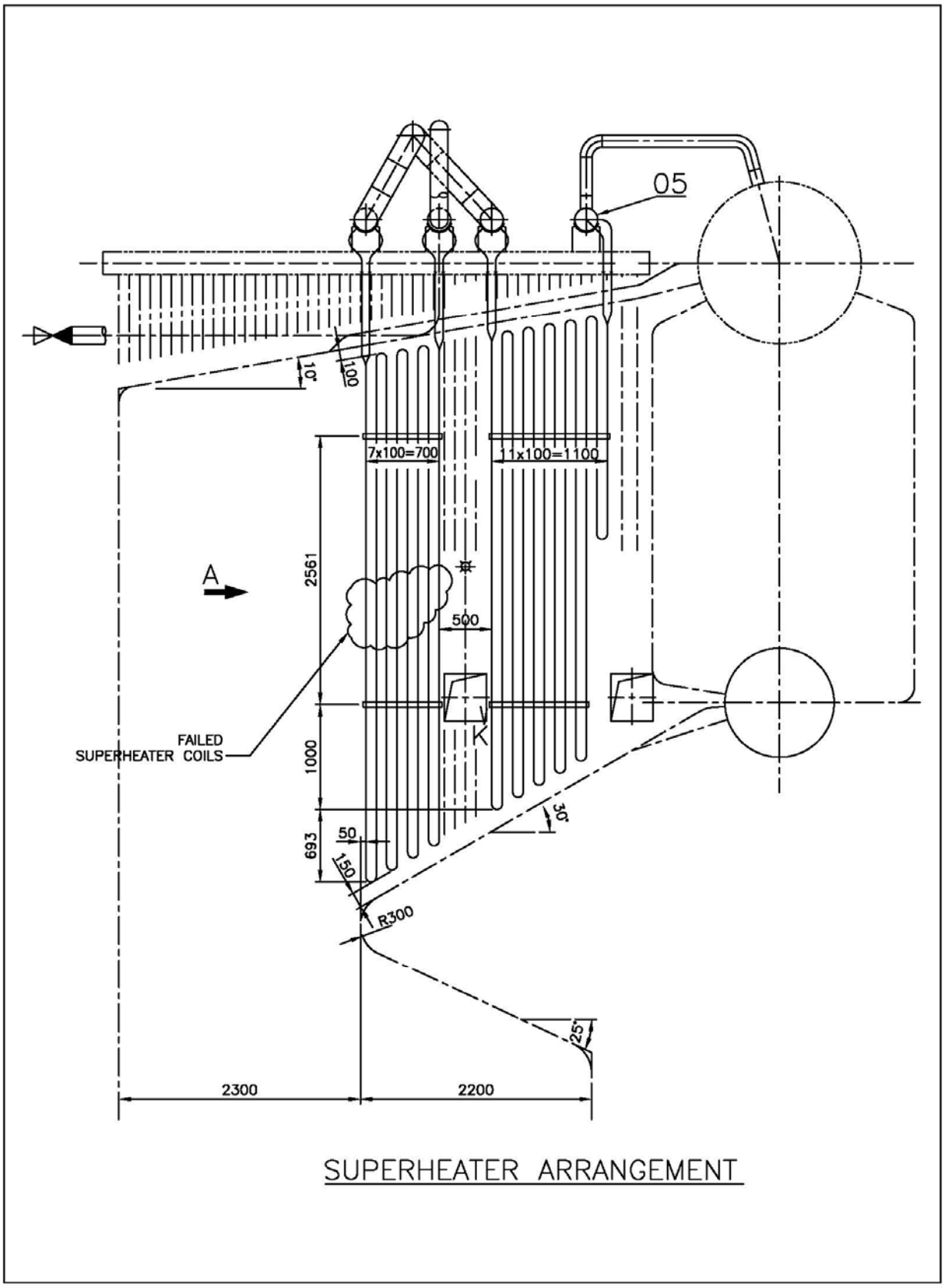


Case study 2: Figure-1: Superheater arrangement showing the counter flow primary SH & parallel flow secondary superheater.

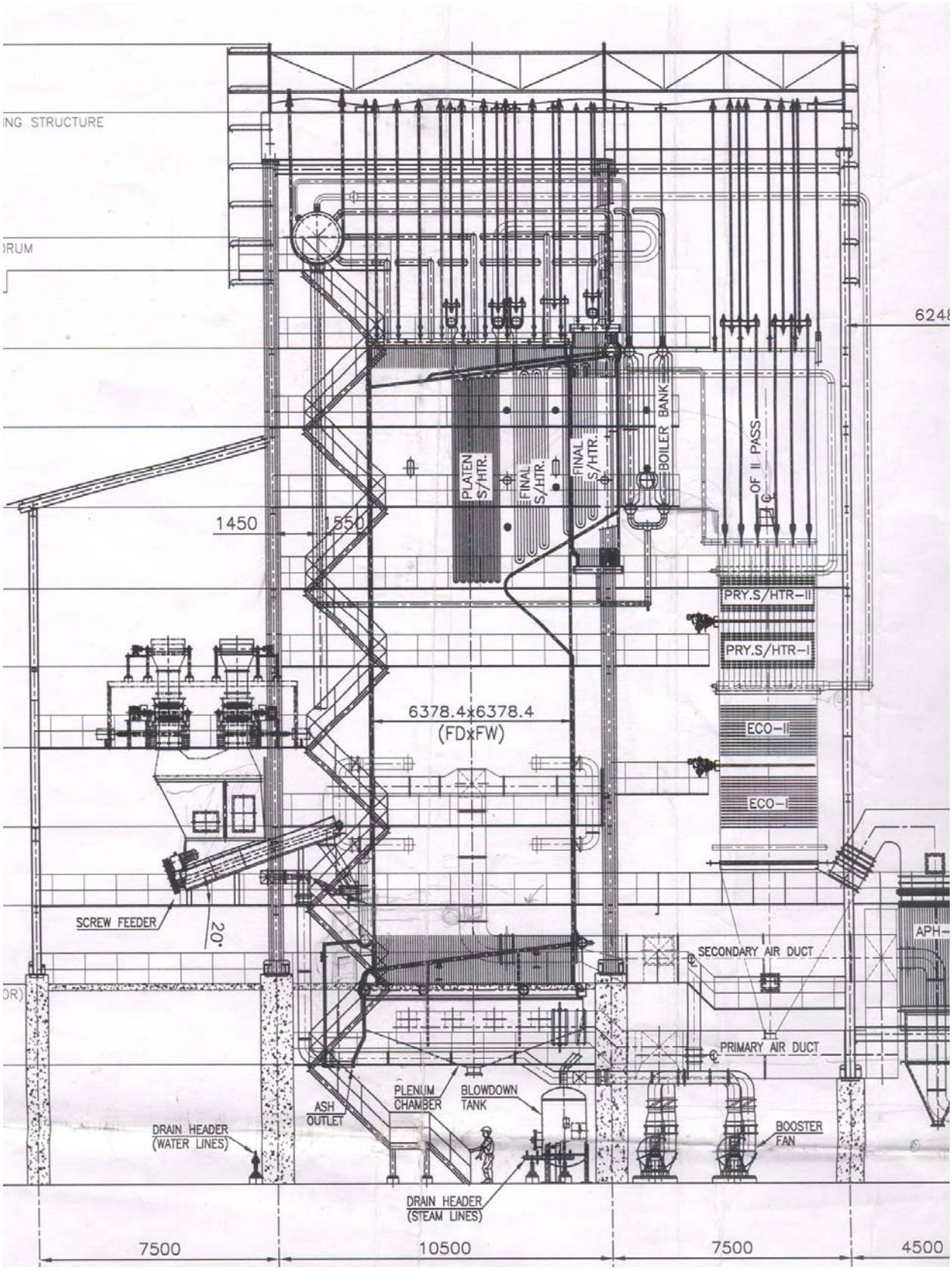


Case study 2: figure 1- The final SH is located after the stage 2 superheater. The primary SH is located in the gas duct above APH. A boiler bank is available after the Final superheater. The boiler parameters are 100 TPH, 106 kg/cm2 & 530 deg C.

Case study 2: Photo-5: The corroded final SH coils removed from the boiler. The corrosion occurs due to action of KCl, NaCl at the high temperature zone where chlorine is able to deplete Cr as well as Fe.

Case study 2: Photo - 6: Corroded final superheater coils along with new coils at the rear.

Case study 3: Photo 1- Pealed of metal exhibiting yellow, green and blue is appearance similar to what was experienced at other biomass power plant.

Case study 4: Photo 2- Tube bearing, rough and graters after the deposit is removed. It is typical of chlorine corrosion taking place under the deposit.

Case study 3: Photo- 3: Tube bearing, rough and graters after the deposit is removed. It is typical of chlorine corrosion taking place under the deposit.

Case study 4: Photo -4: All Super Heater tube length removed from boiler showing the corrosion of the tubes. The first leakage had occurred near soot blower area.

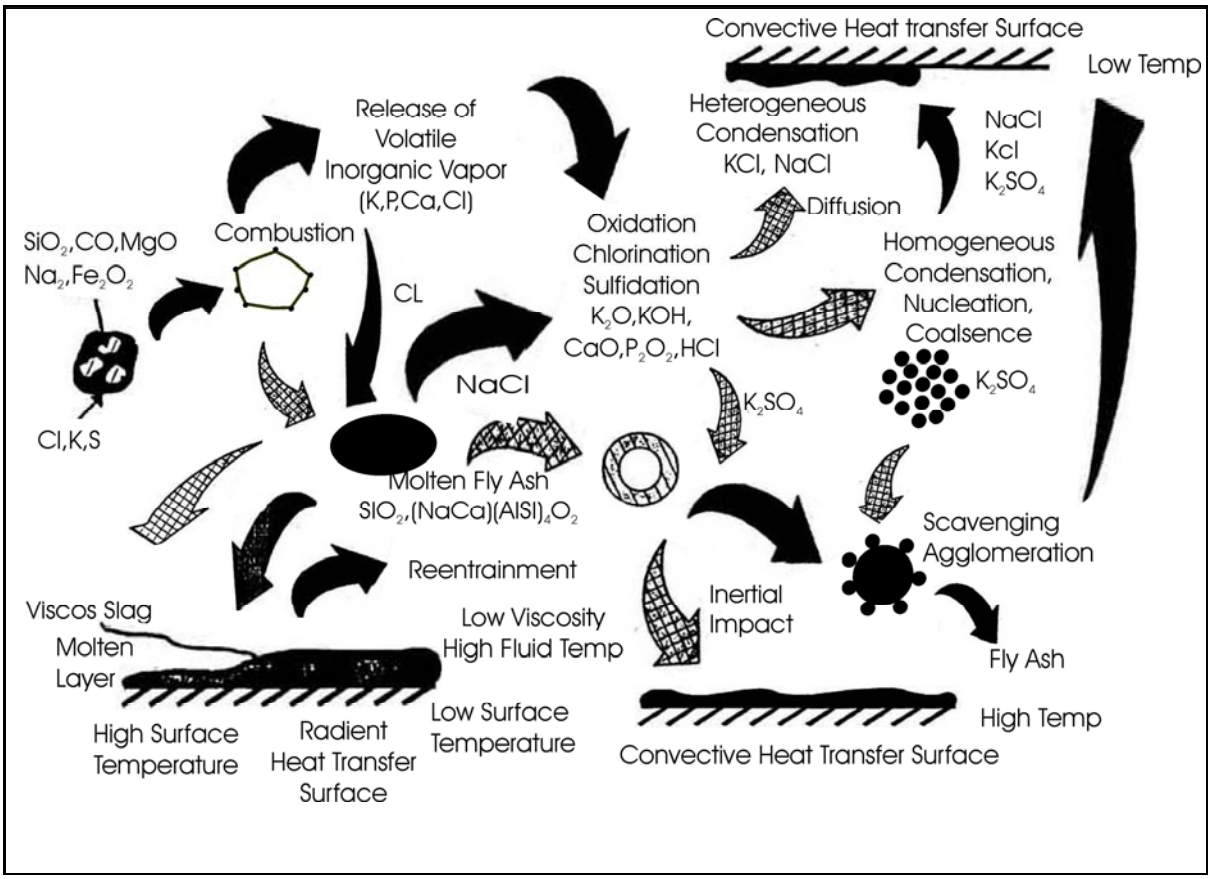


Figure 2: Volatilization of alkalis & deposition on convective surfaces – proposed by Bryers.

Case study 4- photo 1: deposition in a boiler fired with empty fruit bunches of palm fruits. This fuel contains more sodium and no chlorine. The superheater & economiser are coated with ash but corrosion failure was not reported.

# FINE TUNING EXPERIENCE OF A CFBC BOILER

## *INTRODUCTION*

The Industrial boilers have been seeing a growth in capacity in the recent years. Current trend is to install CFBC boilers to realize better combustion efficiency. Boiler operators are now required to learn the tricks & tips of CFBC boiler operation. I share my experience on tuning a CFBC boiler during its post commissioning phase. The readers may find this case interesting with respect to the minimum instrumentation requirement for CFBC. Readers will appreciate that instrumentation has helped to tune the CFBC unit operation.

## *ABOUT THE BOILER*

The CFBC boiler supplied by Chinese company has been in operation for about 3 months prior to my visit to this plant. The boiler is designed for 100% coal, 50% coal & 50% petcoke. The boiler parameters are 70 TPH, 88 kg/cm2, 510 deg C and feed water temperature is 124 deg C. The design boiler efficiency is 87% with a D grade Indian coal of 36.57 % ash. The arrangement is as shown in figure 4. The boiler is provided with twin refractory cyclones. A platen SH (secondary) is placed inside the combustor. The final SH & economizers are arranged in the second pass.

## *CFBC WORKING PRINCIPLE*

The circulating fluidized bed combustion technology, CFBC, uses greater combustor superficial gas velocities than the bubbling bed combustor. See figure 1 & 2.

CFBC operates under a special fluid dynamic condition, in which the fine solids particles are transported and mixed through the furnace at a gas velocity exceeding the average terminal velocity of the particles. The major fraction of solids leaving the furnace is captured by a solids separator and is recirculated back to the base of the furnace. The high recycle rate intensifies solids mixing and evens out combustion temperatures in the furnace.

CFBC systems operate in a fluid dynamic region between that of BFB and pulverized fuel firing. This fluidization regime is characterized by high turbulence, solid mixing and the absence of a defined bed level. Instead of a well-defined solids bed depth, the solids are distributed throughout the furnace with a steadily decreasing density from the bottom to the top of the furnace.

CFBC is characterized by:

- High fluidizing velocity of 4.0 -6.0 m/s
- Dense bed region in lower furnace without a distinct bed level
- Water-cooled membrane walls.
- Optional in-furnace heat transfer surfaces located above the dense lower bed. This can be evaporator panel / SH panel in platen form.
- Solids separator to separate entrained particles from the flue gas stream and recycle them to the lower furnace. The solid separator can be water cooled / steam cooled / refractory lined. Design of solid separator can be different from manufacturer to manufacturer.

- Aerated sealing device, loop seal, which permits return of collected solids back to the furnace.

For the CFBC, gravity feed of fuel directly into the combustor has proven satisfactory for meeting the desired level of efficient mixing.

A solids separator located at the outlet of the combustion chamber separates entrained particles from the flue gas stream. The separator is designed for high solid collection efficiency with nearly 100 per cent efficiency for particles greater than 90 microns in diameter. Fuel can also be fed in the recirculation solids stream at the seal pot.

The collected solids are returned to the combustion chamber via the loop seal, which provides a pressure seal between the positive pressure in the lower furnace and the negative draft in the solids separator. This prevents the furnace flue gas from short circuiting up the separator dip leg and collapsing the separator collection efficiency. The recirculation system has no moving parts and its operation has proven to be simple and reliable. By injecting small amounts of high pressure fluidizing air into the loop seal, the solids movement back to the lower furnace is maintained.

**The following are the problems experienced by the operating team**

1. Efficiency of the boiler is low. The unburnt coal in fly ash is around 1.79%.
2. Boiler does not generate the rated steam at rated furnace temperature.
3. Even with a furnace temperature of 950 deg C & flue gas O2 at 8%, the steam generation is 62 TPH.

The operating engineers shared their experience during the commissioning phase. There has been heavy air ingress in II pass roof & where economiser tubes penetrate the casing. There was shortage of ID fan capacity with all these leakages. The client had installed penthouse for the second pass & seal boxes for economiser headers. Further the seal welding of entire second pass casing to structure was done. Only after this the boiler draft problem got removed.

***REVIEW OF EFFICIENCY OF THE BOILER***

At the time of visit the boiler was operating at 60 TPH with O2% of 8%. The as-fired moisture of coal is around 14%. The GCV on air dried basis more or less matched the design GCV. Assuming effect of air infiltration is nil, the excess air for design coal worked out to be 61.2%. With an LOI of 1.79% in fly ash the efficiency was predicted to be 86.89%. A comparison of losses is given below.

| *Comparative efficiency performance* | | *Design coal* | *Standard coal* |
|---|---|---|---|
| Moisture | % by wt | 14 | 14 |
| Carbon | % by wt | 45.17 | 43 |
| Hydrogen | % by wt | 0.82 | 2.69 |
| Oxygen | % by wt | 5.44 | 5.6 |
| Sulphur | % by wt | 0.55 | 0.47 |
| Nitrogen | % by wt | 0.17 | 1.05 |
| Ash | % by wt | 33.85 | 33.19 |
| total | | 100 | 100 |
| | | | |
| GCV- as fired | Kcal /kg | 3760 | 4207 |
| ADB moisture | % by wt | 7.09 | 8 |
| GCV - ADB | Kcal /kg | 4062 | 4500 |
| | | | |
| **HLS1, Unburnt carbon loss %** | **%** | **1.07** | **0.94** |
| **HLS2, Total Heat loss through the ash %** | **%** | **0.37** | **0.33** |
| **HLS3, Heat lost through moisture in air %** | **%** | **0.28** | **0.27** |
| **HLS4, Heat lost thro moisture & H2 in fuel** | **%** | **3.6** | **5.76** |
| **HLS5, Heat lost through dry flue gas** | **%** | **7.29** | **6.91** |
| **HLS6, Radiation loss** | **%** | **0.5** | **0.5** |
| **Total losses** | **%** | **13.11** | **14.71** |
| **Therefore, Boiler efficiency,** | **%** | **86.89** | **85.29** |

My client used direct method for evaluation of boiler performance. The reasons for not achieving even these values were due to the following. In fact the same problem is faced among many boiler users. I pointed out the following facts to client.

1. There is a difference in total moisture between as received coal & as fired coal. In the input coal to coal handling plant the moisture can be at least 2-3% higher. Coal can dry up in the crushing & screening process. The boiler consumes less fuel but the weight booked is with additional moisture. Hence there is a need to establish the variation in Total moisture in raw coal & fired coal.
2. In direct method, the GCV & weight of coal should be both on the as fired basis. Taking GCV on crushed coal & weight on raw coal is not correct. Moisture & GCV estimation of raw coal can be very erroneous due to sampling error. The moisture & GCV on crushed coal is reliable since the coal is homogenized in crushing & screening process.
3. Total moisture estimation has to be done immediately after sampling. The GCV should be done on bone dry basis. If lab humidity conditions are constant in all season / in all hours air dry basis will not add error. Boiler users need to know that GCV is reported on air dried basis by lab. We need to calculate the GCV on as fired basis.
4. The coal feeding is normally varied depending on the load. This variable can affect the

efficiency practically. The oxygen reduces when coal is fed. This leads to unburnt CO / hydrocarbon leaving the furnace. Relying on O2 for air adjustment was not correct. LOI of ash is also to be watched for O2 trimming.

***SHORTAGE OF STEAM GENERATION CAPACITY & STEAM TEMPERATURE***

CFBC boilers do not have bed coils as in AFBC. The steam is generated across the entire furnace. The heat transfer coefficient is dependent on the amount of fines present in the recirculating ash. The following are the possible causes for loss of steam generation.

- Less fines in the feed itself.
- Poor performance of cyclone separator / separators
- Loop seal reversal.

In case the ash content itself is very less the boiler should be provided with fly ash recirculation arrangement. Incidentally the boiler bank ash, Economiser ash, APH ash and even ESP ash of an AFBC boiler can be a feed for CFBC boiler in order to adjust the fines content in furnace. It also helps in re-burning of ash. The presence of fines is read by the pressure transmitters placed along the height of the boiler. Here I should make a mention that there are some manufacturers do not provide this. There was hardly any head read by the pressure transmitter. See picture 1. So I went for sampling & sieve analysis of coal, bed ash & fly ash.

The table 1 showed there were hardly any fines in the feed or in bottom ash. Loop seal ash distribution more or less tallied the requirement. Figure 3 is based on extensive trials in a CFBC unit. It could be confirmed that the cyclone performance is OK. I had advised for the change of coal size as in the AFBC boiler looking at the higher content of oversize particles.

At the time of visit, the view holes in dip legs of Cyclone were opened & seen. It was found that there was improper recycling in one of the cyclones. There was reverse flow in one dip leg. See photo 1 & 2. It was calculated that the total loop seal air flow requirement should be 1000 m3/h, whereas the present roots blower capacity is 3210 m3/h and all its capacity was used up for loop seal. This was reduced gradually by opening the relief valve to 30%. The loop seal was seen working after this. The ash recycling is very important to attain higher efficiency. The carbon burn up improves with the presence of fine particulates. The working of the loop seal could be identified by the heavier airbox pressure seen in dip leg and riser leg has less airbox pressure. See picture 3, showing the inadequate dip leg pressures. See picture 4 which shows the dip leg airbox pressure is more than the riser leg side.

I left the plant insisting on the coal particle size and ash recycling arrangement required for maintaining the fines content in the furnace for improving steam generation & carbon burn up.

***THE SECOND VISIT***

After months later, the customer called up again asking for the visit. By this time the OEM had tried everything & left it to me. When the customer called up, I requested them to change the coal size first. I promised to visit only after this is done. Two days after the switch over I had visited.

***Boiler performance on Coal of 8 mm top size crushed coal***

In the last two days the coal size was changed as per the recommendation given earlier. This has helped in rising the boiler steam generation without having to exceed the furnace temperature above 930 deg C. The dust load in the free board is found to rise as indicated by the free board pressure transmitter. Earlier the differential pressure between upper & lower furnace before switching over to 8 mm coal was hardly 20 mmWC. Now it is seen as 50 mmWC. See picture 1 & 2.

The boiler was seen to generate 75 TPH with a bed temperature of 925 deg C. The loop seal temperature has reduced to 920 – 930 deg C. Earlier this was going to 950 deg C and with high excess air. The boiler exit gas temperature was more than 190 deg C.

***Loop seal working***

In this visit also I found that one of the loop seals was not working. Then the damper settings of air to loop seals were adjusted. The dip leg seal must be filled with material to a height more than the riser leg side. The material height at riser is fixed by the construction of the loop seal. When the bed expands beyond 600 mmWC, the material overflows to furnace. The height of the dip leg is maintained by adjusting the aeration.

- After correcting the loop seal, it was seen to contribute for dust load in free board. The bed temperatures were then seen to be within limits. The boiler was operated at 75 TPH (beyond rated capacity) without having to raise the temperature beyond 930 deg C.
- In a nut shell, the loop seal operation is very vital in recirculation of fines and this can contribute increasing the dilute bed above the dense bed.
- In fact the dip leg air flow is maintained at 0.3 m/s or less just to promote the aeration of material in dip leg.
- In riser leg the transfer is a function of the fluidizing air velocity. This is designed for 1.3 m/s. It needs modulation depending on the fine ash generation. In case the fines are increasing beyond limit and the furnace gets loaded with dust, the same can be drained from dip leg drain.

***CONCLUSION***

CFBC boilers need certain essential instrumentation for proper combustor operation & identification of a deviation. Figures 1 to 3 are provided for the interest of the CBFC owners.

***Figure 1- Furnace & loop seal instrumentation***

1. The air flow adjustment valve is for regulation of aeration at dip leg. Helps in proper start up. Or else it would take more time to establish the loop seal.
2. Air flow control valve at riser leg decides the transfer rate to main furnace. Excess transfer rate will lead to seal break. In adequate transfer rate will result in plugging of loop seal.
3. Air flow indications provide the operators parameters for regulation. Or else operators have to make blind adjustment. Many times loop seal will break.
4. Vent control valve is required since a twin lobe blower is used here. Or else VFD will be required.

5. Loop seal needs drain in order to control the lean bed density. Too much of dust will result in combustion temperature.
6. Drains are required for the main combustor as well. The bed ash cooler may malfunction any time.
7. Presence of adequate ash in dip leg is known by this.
8. Comparison of the pressures tells the loop seal is functioning.
9. Height of dense bed is known by this (includes drop across distributor).
10. Height of lean bed is known by this.
11. Secondary air is adjusted to complete the combustion in furnace itself.

***Figure 2: Primary air system***

1. Air flow meter after APH ensures the leakage air flow in APH is ignored. Moreover tube leakage is identifiable in case the damper opening increases for the same air flow.
2. As APH develops tube leakage the pressure drop across APH can be used for inference.
3. Cold air is used for coal chute flushing. This prevents the chute fires / explosions / chute clinkering.
4. Air pressure is a measurable parameter for monitoring. Damper settings are not reliable.

***Figure 3: Secondary air system***

1. Air flow meter after APH ensured that the leakage air flow at APH is ignored.
2. Pressure to ensure penetration is possible for CO ppm reduction is possible by choosing to close dampers optionally.
3. Valves to choose levels of secondary air ports based on FC / VM ratio.
4. As APH develops leakage the pressure drop can be used for diagnosis.

New buyers may now review the instrumentation requirement. Existing CFBC owners can review what supplement instrumentation is required for their plant.

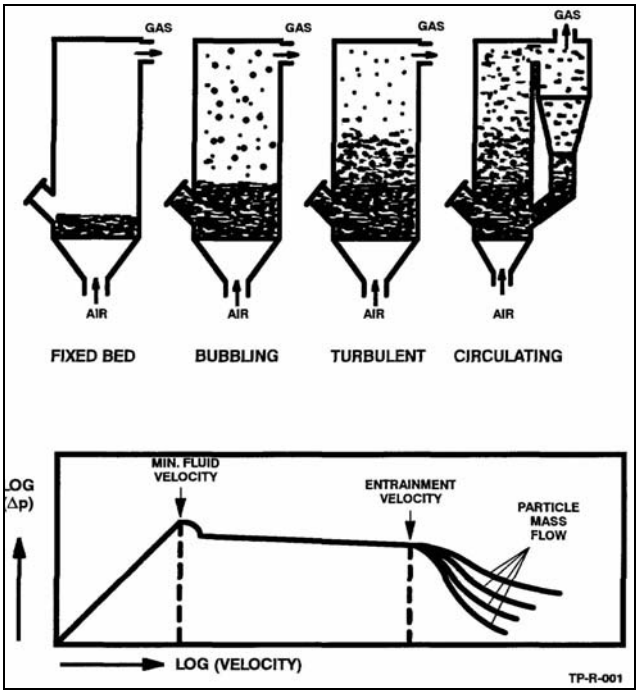


Figure 1: The principle of CFBC

Figure 2: CFBC illustration with cyclone & loop seal.

| Coal | | | | |
|---|---|---|---|---|
| Top | Bottom | mean size | % wt | mean |
| 13 | 6 | 9.5 | 42.98 | 4.08 |
| 6 | 3 | 4.5 | 24.06 | 1.08 |
| 3 | 1 | 2 | 20.48 | 0.41 |
| 1 | 0.2 | 0.6 | 12.48 | 0.07 |
| | *Mean particle size* | | | ***5.65*** |

| Bed ash | | | | |
|---|---|---|---|---|
| Top | Bottom | mean size | % wt | mean |
| 13 | 6 | 9.5 | 8.88 | 0.84 |
| 6 | 3 | 4.5 | 9.47 | 0.43 |
| 3 | 1 | 2 | 22.45 | 0.45 |
| 1 | 0.2 | 0.6 | 59.2 | 0.35 |
| | *Mean particle size* | | | ***2.07*** |

| Cyclone ash | | | | |
|---|---|---|---|---|
| Top | Bottom | mean size | % wt | mean |
| 1.5 | 1 | 1.25 | 0.93 | 0.01 |
| 1 | 0.425 | 0.7125 | 12.93 | 0.09 |
| 0.425 | 0.25 | 0.3375 | 26.89 | 0.09 |
| 0.25 | 0.075 | 0.1625 | 40.75 | 0.07 |
| | *Mean particle size* | | | ***0.26*** |

Table 1: Sieve analysis of coal, bed ash & loop seal ash.

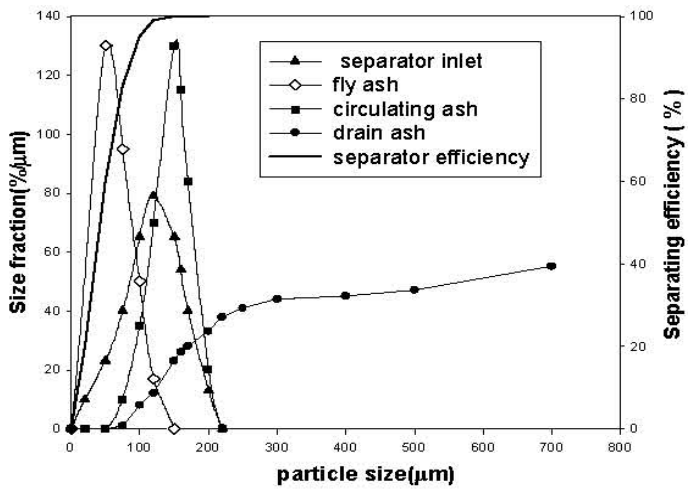


Figure 3: Typical size distribution of particles in a CFBC boiler.

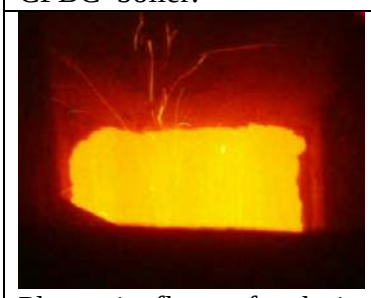

Photo 1: flow of ash in loop seal- working well.

Photo 2: Backing of ash in the next loop seal.

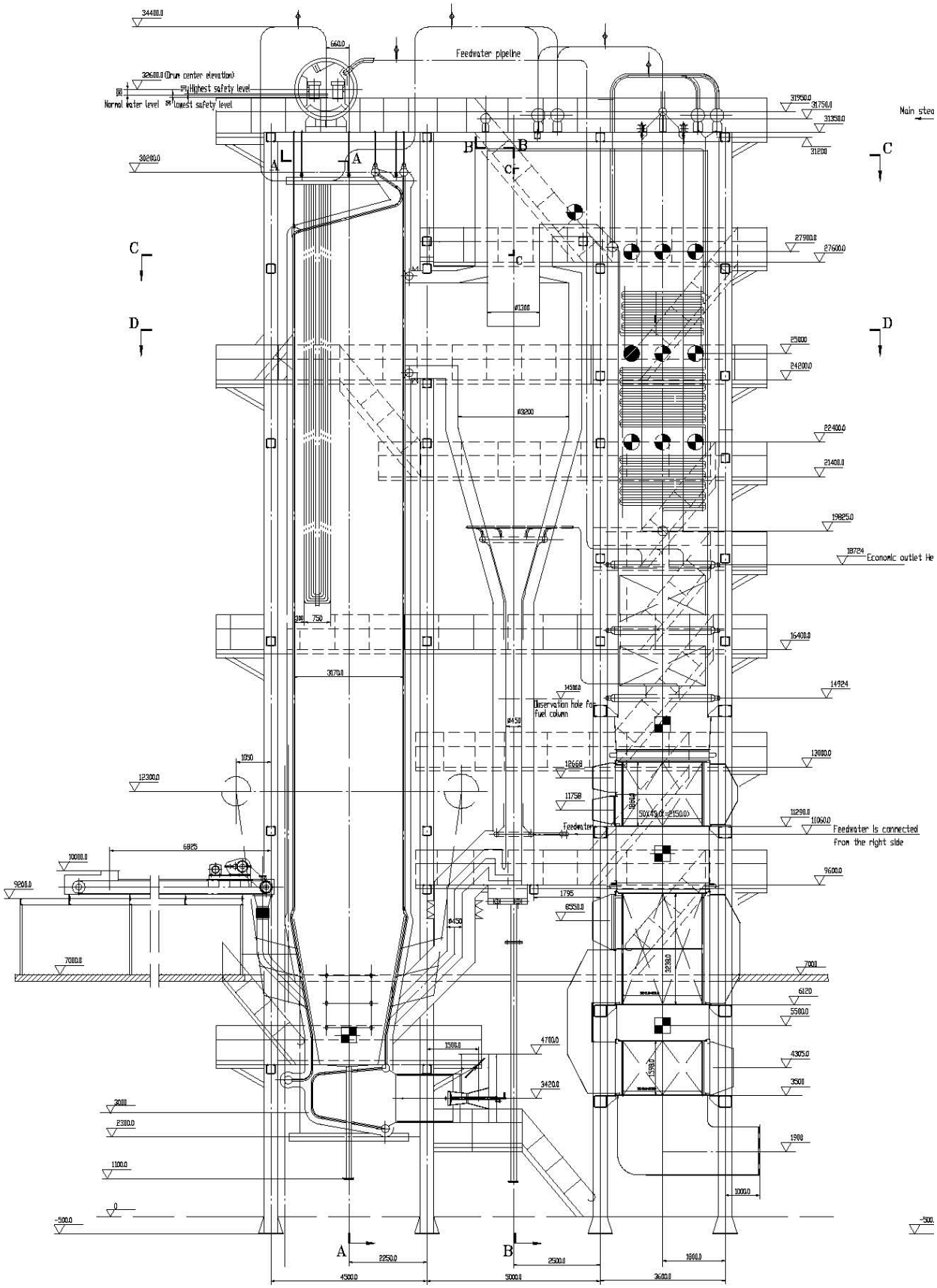


Figure 4: A view of CFBC boiler.

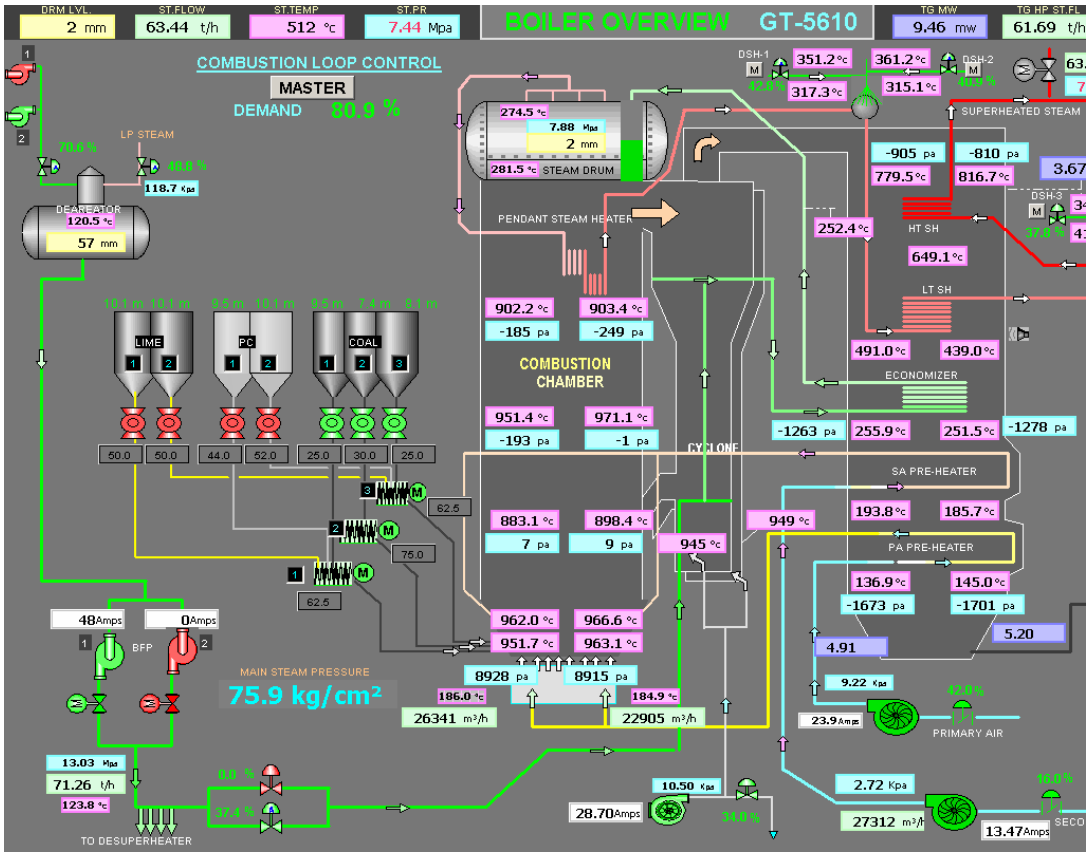


Picture 1: This is the picture of furnace at the first visit. The furnace bottom temperature is higher that the free board. The free board pressure is hardly 11 mmWC. There is considerable temperature drop in free board. Again at loop seal the temperature is more. It means combustion is taking place at loop seal.

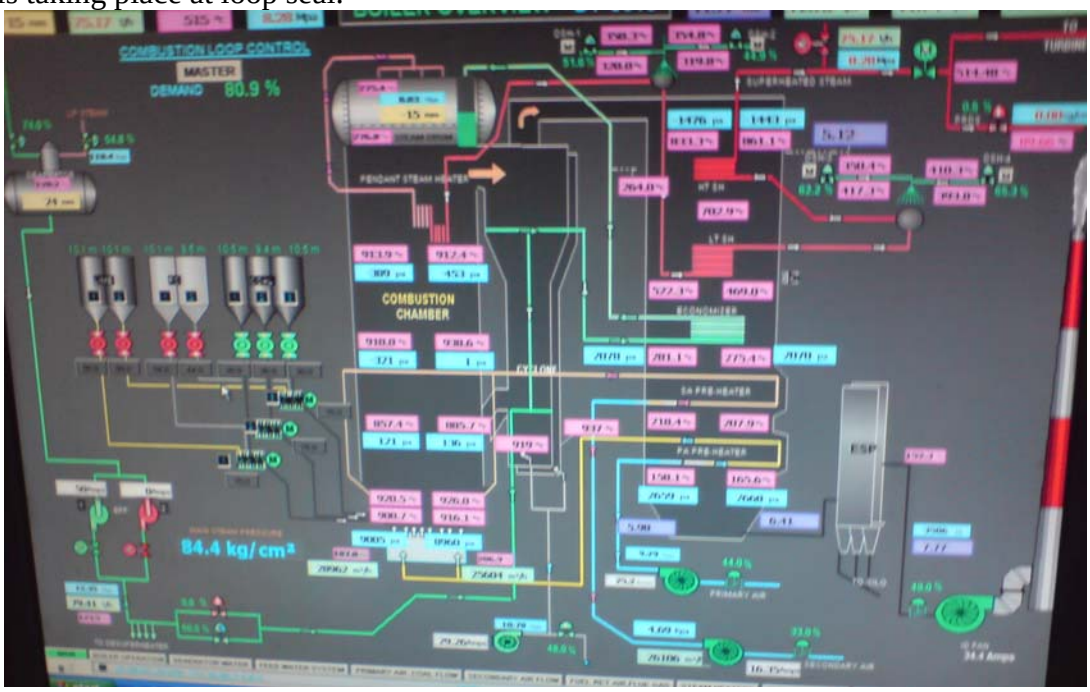


Picture 2: After the parameters were corrected, the steam generation went to 75 TPH with furnace & loop seal temperatures at 900-920 deg C. The lean bed height is now 42 mmWC.

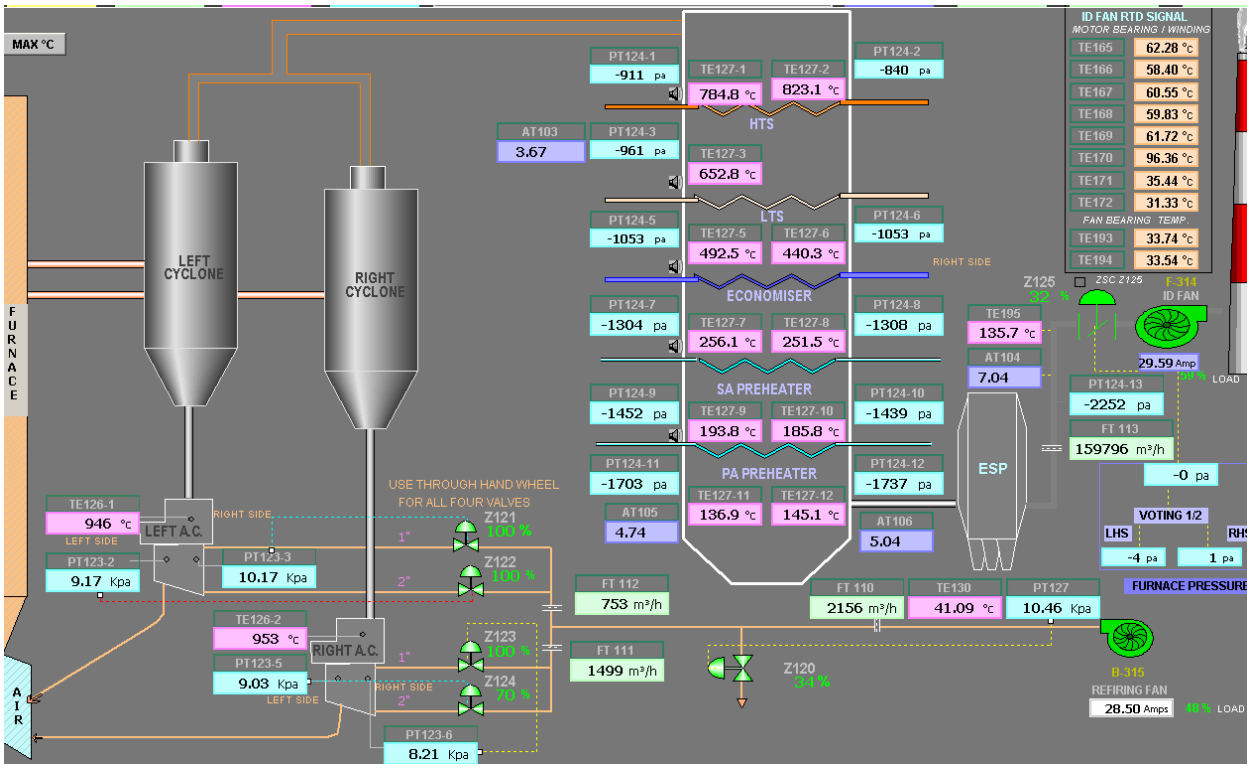


Picture 3: Loop seals not working before the adjustments were made. The dip leg airbox pressure is less than the riser leg side airbox pressure in right cyclone. There is no markable difference in the left cyclone either.

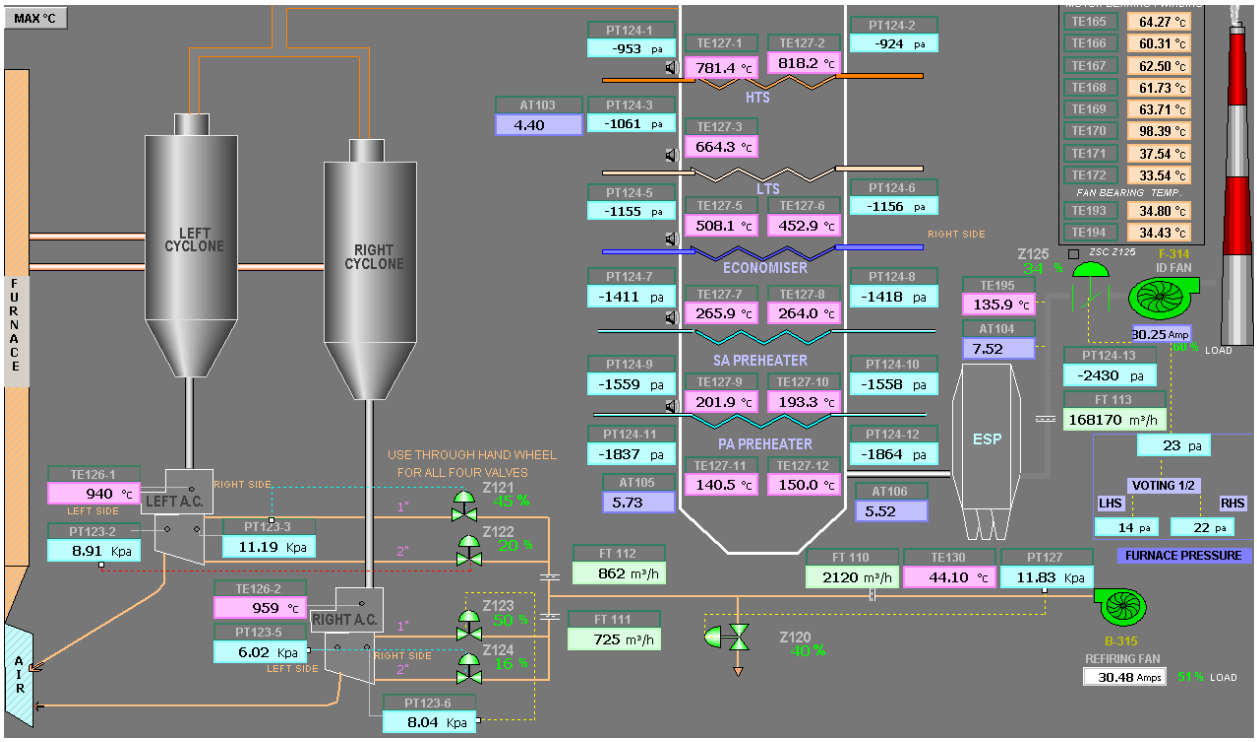


Picture 4: The air flows between cyclones were balanced & valves were throttled to see that there is at least 200 mmWC more pressure at the dip leg side. This picture was taken immediately after the adjustment. Within 2 hrs the boiler reached full load at a lower furnace temperature.

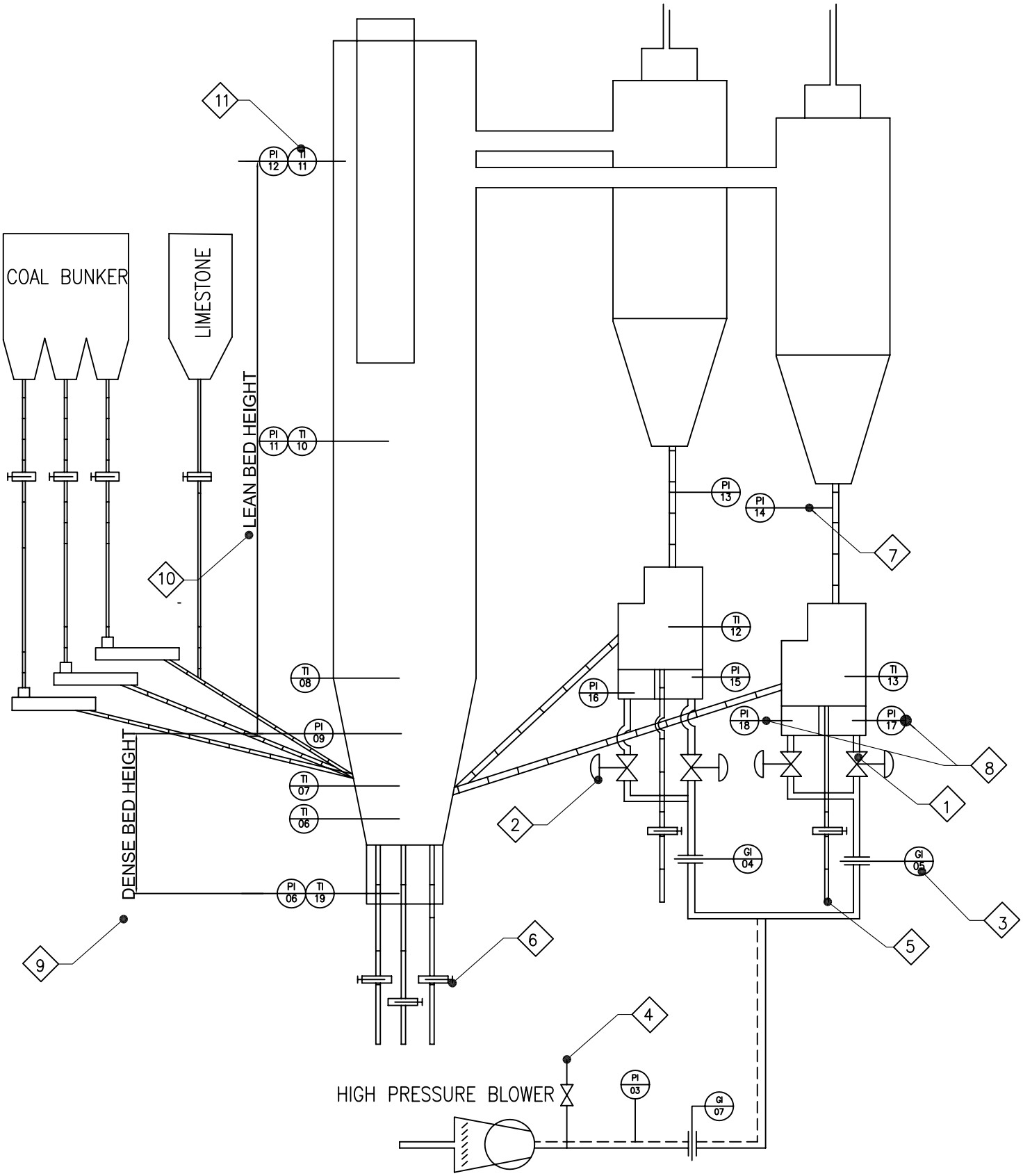


FIGURE 5: ESSENTIAL INSTRUMENTATION FOR CFBC FURNACE

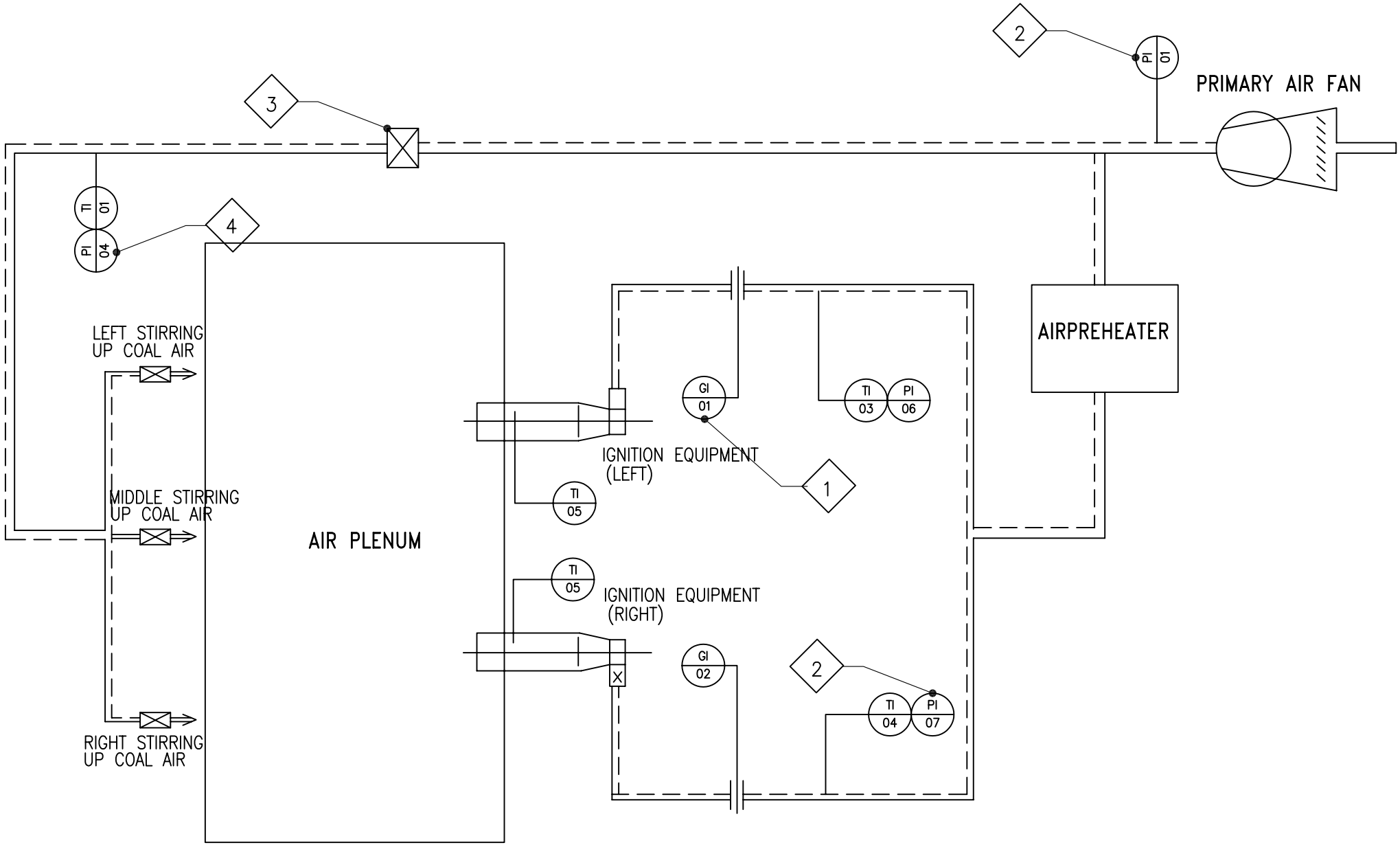


FIGURE 2: PRIMARY AIR SYSTEM CONTROLS

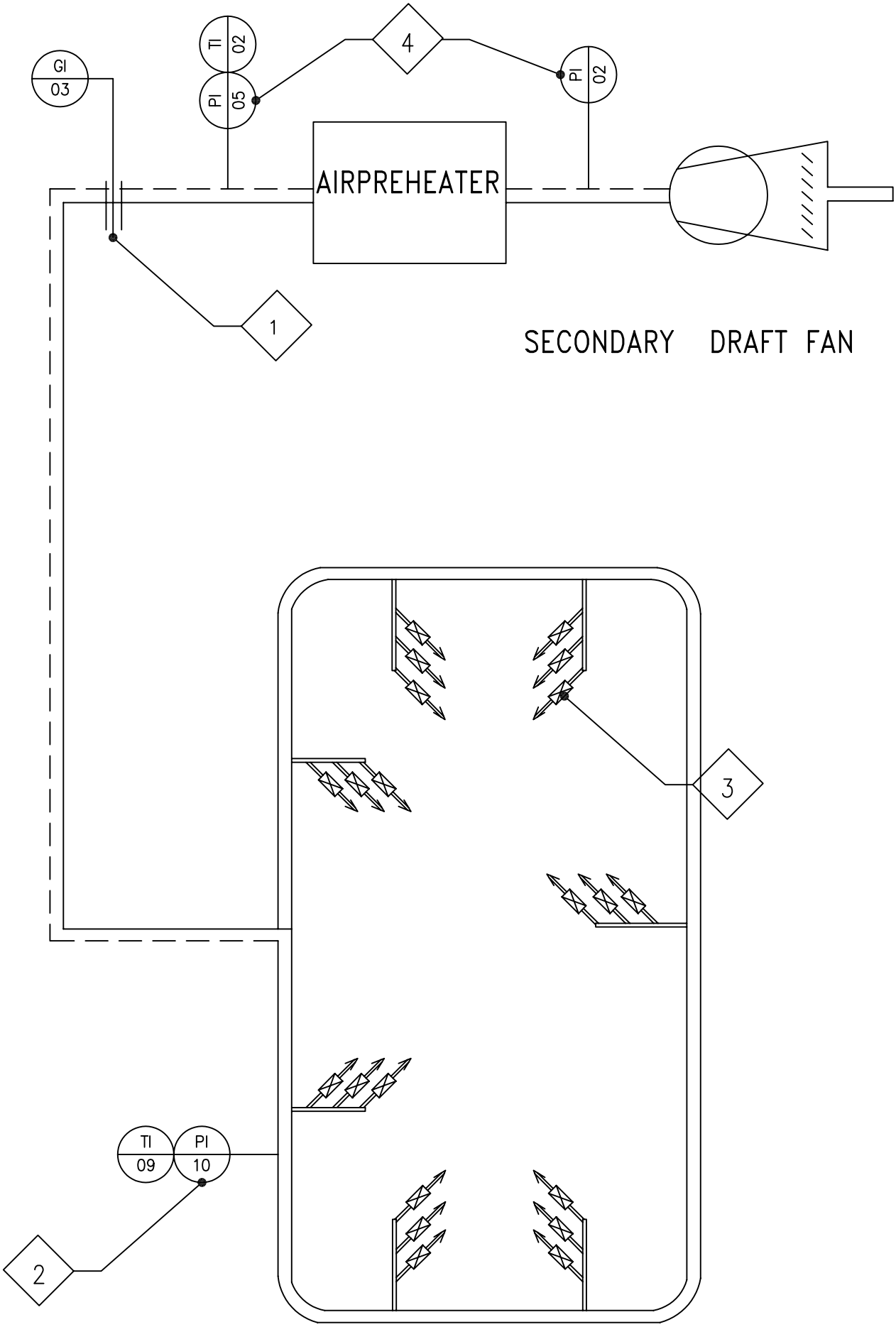


FIGURE 7: ESSENTIAL INSTRUMENTATION FOR SA SYSTEM

**LITERATURE ON BOILER TUBE FIT UP BY EXPANDING**

***INTRODUCTION***

Boiler tubes are assembled by welding or by expanding. Expanding is mainly adopted in Boiler bank assembly. Expanding is resorted to, as it is the simplest way to fit the tubes in boiler bank. In this subject of tube expanding one may not find good literature regarding the % thinning to be adopted and the sequence to be adopted. Many have doubts whether a leaky joint can be seal welded or not. This article is brought out to clear the doubts of boiler users.

***A TUBE EXPANDER***

A tube expander can be a roller type, which is widely used in Industry even today. It has a taper mandrel, when driven in, pushes out the three rolls. The tube is made to fill the gap between the tube and the tube hole. After the tube touches the tube hole, tube is further thinned to ensure a leak tight joint is established.

***LITERATURE ON TUBE EXPANDING***

Tube expanding is in vogue for many years. Yet code regulations do not spell out enough on this subject. It has become necessary to reproduce the paragraphs of code regulations on this subject, for reader's interest. Further literature by some manufacturers is added here.

- *SOURCE: Steam / Its generation and use / Babcock & Wilcox: Pages 32.6 to 32.7*

***TUBE CONNECTIONS***

Tubes may be attached to drums or headers by welding, expanding or a combination of both.

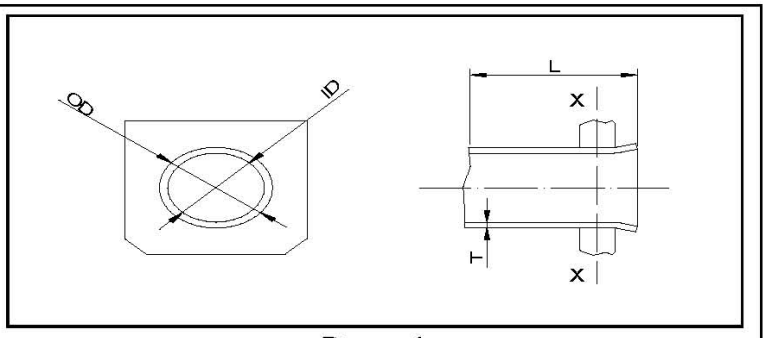


Figure 1

Welded connections may be made by joining the tube directly to the header, as in the case of membrane wall panels or by welding the tube to a stub (short length of tube) that is attached to the drum or header in the shop. This type of construction is used for the majority of connections.

In some applications, however tube expanding is a practical method of tube connections. Tube expanding or tube rolling is a process of cold working the end of the tube into contact with the metal of the drum or header containing the tube holes or seats. When a tube is expanded, the outside diameter, inside diameter and length increase and wall thickness decreases (*see figure 1*). The increase in length, called extrusion, occurs in both directions from some section X-X. The residual radial pressure between the tube and tube seat resulting from a properly expanded tube will provide a pressure tight joint of great strength and stability as shown in *figures 2 & 3*.

A typical roller expander contains rolls set a slight angle to the body of the expander causing the tapered mandrel to feed inward when it is rotated in a clockwise direction. As the mandrel feeds inward the rolls develop the internal force, which expands the tube.

The expanded joint presents a simple and economical way of fastening tubes into low-pressure boilers. Under axial loading, the expanded joint is as strong as the tube itself. However for conditions of widely fluctuating temperatures and bending loads, the expanded joint must be seal welded (*see figure 4*) or replaced by a shop attached tube stub. Generally, tubes above 1500–psi (105 kg/cm2g) range are either expanded and seal welded or attached to shop welded stubs. Selection of the type of tube end connection to be used is dictated by design, assembly, and operating characteristics.

***SEAL WELDS***

Seal welds are used to make mechanical joints fluid tight. The strength of the connection is developed by the expanded joint, pipe threads or by the configuration as in the case of hand hole fittings. The throat dimension of seal weld is limited to 9.5 mm. Maximum, and post weld heat treatment is not required.

- *SOURCE: INDIAN BOILER REGULATIONS: Regulation no 152*

152: Attachment of Steel tubes

a. Tubes shall be connected to the tube plates by one of the following methods. (1) Expanding (2) strength welding (3) Mechanical bolted bail joint.

b. Drift or roller expanded tubes shall project through the neck or bearing part in the holes by at least a quarter of an inch and shall be secured from drawing out by being bell mouthed to an extent of 1/32 inch for each inch in diameter plus 2/32 inch.

c. Tubes may be seal welded into fittings or headers for both boilers and super heaters after they have been expanded and flared provided the material into fitting or header does not contain carbon in excess of 0.35 %.

d. In the case of drifted or roller expanded tubes, the tube holes in the tubes plates of drums, pockets or headers shall be formed in such a way that the tubes can be effectively tightened in them. Where tubes are normal to the plate, there shall be a neck or belt of parallel seating of at least ½ inch depth measure in plane parallel to the axis of the tube at the holes.

- *SOURCE: BS 1113: 1999 Design and manufacture of water tube steam generating plant*

A. Connections to main pressure part
   1) Expanded connections

The hole in the main pressure part shall provide a belt of parallel seating of not less than 13mm. It is permitted to seal weld internally or externally. The forming of holes, internal projection shall conform to B.

B. Tubes and integral pipes.

1) Scope and restrictions

It is permissible to attach tubes and integral pipes to main pressure parts, other than welding, by propulsive expanding and belling or by expanding and seal welding. It is also permitted to use other methods of expanding, but in such cases it shall be demonstrated that the method provided adequate leak tightness and will prevent tube withdrawal in service, unless documented evidence of satisfactory performance in service is produced. The outside diameter of the tube of pipe connected by expanding shall not exceed 114.3 mm.

2) Expanding of tubes and pipes

Tube holes for expanded tubes shall be formed in such a way that the tubes can be effectively tightened in them. The surfaces finish shall be no coarser than 6.3 microns (see BS 1134). The surface shall exhibit no spiral or longitudinal score marks which could form a leak path. Where the tube ends are not normal to the tube plate, there shall be a neck or belt of parallel seating in the tube hole at right angle to the axis of the tube. The belt shall be at least 10 mm in depth measured in a plane containing the axis of the tube at the hole.

Where pipes or tubes are fitted by propulsive expanding, they shall be belled out from the edge of the tube hole at an angle to the tube axis to resist withdrawal. In no such case shall the projection of the tube though the parallel tube seat shall be less than 6 mm and the belling shall be not less than given in table A

| **Table A belling dimensions for tubes propulsively expanded** | |
|---|---|
| Dimensions in mm | |
| Outside diameter of tube | Minimum increase in diameter of belling over tube hole diameter |
| Upto and including 51 | 3 |
| Over 51 and upto and including 82.5 | 4 |
| Over 82.5 upto and including 101.6 | 5 |

- *SOURCE: Boiler repair manual by US Navy*

***FITTING TUBES***

When fitting tubes into drums or headers, be sure each tube extends far enough in to the header or drum. Tubes up to (but not including) 2 inches in OD should project 3/16 inch to 5/16 inch (4.7 mm to 7.9 mm) in to the drum or header. Tubes of 2 inches OD and larger should project 5/16 inch to 7/16 inch (7.9 mm to 11.1 mm) in to the drum or header.

In tube joints where the tube and hole measurements can be obtained, the correct amount of expansion can be found by using the following formula

- For tubes in drums: diameter of the tube hole minus OD of the tube, plus 0.012 inch (0.3048 mm) per inch OD of tube.

- For tubes in headers for boiler design pressure less than 500 Psi (35 kg/cm2g): Diameter of tube hole minus OD of tube plus 0.015 inch (0.381mm) per inch OD of tube.

- For tubes in headers for boiler design pressure over 500 Psi (35 kg/cm2g): Diameter of tube hole minus OD of the tube, plus 0.02 (0.508mm) inch per inch OD of tube.

The figure arrived by the using above formula should be added to OD of the tube as measured to give the required OD of the tube after rolling.

If it is impossible to reach OD of the tubes in drums to gauge them, the inside diameter of the tube must be measured. Since plastic deformation of the tube wall varies with the tube wall thickness, the ID of the tube for different wall thickness will vary. Where the outside of the tube is not accessible the following formula is used to in the expansion of the tube.

The ID of the tube, plus the tube hole diameter minus the OD of the tube plus the expansion increase factor.

➢ *SOURCE: Tool selection guide by VERNON TOOL COMPANY CA*

Tube expanding (also referred to as tube rolling) is the cold working of the metal of the tube ends into contact with the tube sheet holes to achieve a pressure tight joint. A tube expander is used to increase the circumference of the tube ends until a proper joint is produced.

This can be related to the rolling of steel, since the steel sheet is made thinner and longer. The tube is an endless sheet and the tube expander enlarges the outside and inside diameter of the tube.

A completed tube joint must have the tube larger than the containing metal in the tube sheet hole. The expanded tube joint contains a force trying to make the tube smaller and a force trying to make the tube hole in the tube sheet larger. As the tube is expanded, the tube wall is thinned and the tube circumference is increased. The tightness at the tube joint will be measured by the increase of the inside diameter or the tube. The following variables determine the proper expansion of a tube.

- Clearance between the OD of the tube and tube sheet hole
- Original tube I.D.
- Amount of expansion after tube-to-tube sheet contact
- Pre-thinning of tube wall before tube-to-tube sheet contact

Each of these factors can be measured and determined before the rolling operation begins.

***IMPROVED TUBE EXPANDING***

The tube of a tube joint must be larger than the tube hole. The tube joint contains equal forces trying to make the tube larger and the tube hole smaller. These forces are always equal.

A “Best” tube joint is one in which the weaker member is stressed to give a maximum expanding or shrinking force. The equal and opposite force in the other member could be greater.

Expanding beyond the point that develops maximum force in the weaker member of the tube joint is over-rolling. Over-rolling thins the tube more than necessary making a weaker tube joint, and produces excessive stressing and growth of the tube sheet.

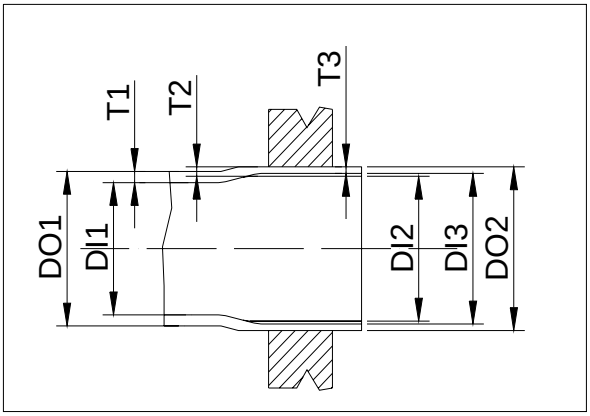


DO1 - Tube OD before expansion
DO2 - Tube OD after expansion
DI1 -Tube ID before expansion
DI2 -Tube ID after pre-thinning
DI3 - Tube ID after joint completion

T1-Tube thickness before expansion
T2-Tube thickness after pre- thinning
T3-Tube thickness after joint completion

**Figure 2**

Excessive working of the tube also causes undesirable changes in its grain structure, creates excessive work hardening, and may even produce cracks in the tubes. Flaking of the tubes usually indicates over-rolling. Flakes are thin layers of the tube metal being sheared from the inner surface of the tube by excessive working of the tube. Expanding tubes thins the tube wall and increases its circumference. If the tightness of the tube joint is measured by an increase in the tube I.D., it is necessary to consider and compensate for pre-thinning the tube wall. Pre-thinning is defined as “tube wall-thinning produced when a tube is enlarged to make it exactly fit in its tube hole.” Pre-thinning varies with the initial tube-to-tube sheet clearance and with the tube wall thickness.

The tube wall is additionally thinned when the tube is enlarged beyond the metal-to-metal fit in the tube hole to create the interference fit condition of the tube joint. This additional thinning is a constant amount when each tube joint is made to have the same amount of interference-fit beyond the metal-to-metal condition of its members.

The following formulas may be used to figure the amount of Pre-thinning produced in any tube joint and with any amount of initial clearance between the tube OD and the tube hole ID.
The tube cross-section has a specific area. The area remains constant when the tube is enlarged; therefore, the tube I.D. must increase.

The ID after establishing the contact with the tube hole is calculated as below.

1. A1, Tube c/s area = 3.142 *{(DO1)^2- (DI1)^2}/4
2. A2, Inner area of DI2 = { (3.142*(DO2)^2 } – A1
3. D12, Tube inner dia after pre-thinning = Sqrt [4 *A2 /3.142]
4. M1,Pre-thinning = {(DO1-DI1)-(DO2-DI2)}

Now final ID is the sum of initial tube-to-tube hole clearance, Pre-thinning & interference required.
The table in the below page shows the calculation for typical convection bank tubes.

- *SOURCE : ASME Section 1 Part PWT*

*PWT –11 TUBE CONNECTIONS*

Tubes, pipe and nipples may be attached to shells, heads, headers and fittings by one of the following methods.

*PWT –11.1*

Tubes may be attached by expanding, flaring, beading, seal welding in the following combinations illustrated in Fig PW –11.

a. Expanded and flared (sketch (a)),
b. Expanded and beaded (sketch (b)),
c. Expanded, flared, seal welded, and re expanded after welding (Sketch (c)) or
d. Expanded, seal welded, and reexpanded after welding or seal welded and expanded after welding (sketch (d)).

The ends of all tubes that are flared shall project through the tube sheet or header not less than ¼ inch (6 mm) nor more than ¾ inch (19 mm) before flaring. Where tubes enter at an angle, the maximum limit ¾ inch shall apply only to the point of least projection. Tubes that are expanded and flared without seal welding shall be flared to an outside diameter of at least 1/8 inch (3.2 mm) greater than the diameter of tube hole. For tubes that are seal welded, the maximum throat of seal weld shall be 3/8 inch (10 mm).

- *SOURCE: HYDRO PRO Inc*

Hydraulic expansion is another technology of fitting tubes in tube holes. In this relatively high hydraulic pressure is used for expanding the tubes in place. The hydraulic pressure makes the tube metal to flow into the tube hole and thus creates a perfect seal. The following is a comparison of the hydraulic expanding versus mechanical roller expanding as projected by the tool manufacturer.

***HYDRALIC EXPANSION vs. MECHANICAL ROLLING METHODS***

1. Hydraulic expanding, or Hydro-expanding, is an innovation in expanding tubes into tube sheet. It is completely different from roller expanding, whether the tube expanders are driven electrically, by air, or hydraulically.
2. In Hydro-expanding, the degree of expanding is directly related to the preset expanding procedure. The pressure is exactly repeatable and does not vary from tube to tube, no matter what shape the tube is in. But, in mechanical rolling, whether you use torque setting or apparent percent tube wall reduction, the degree of expanding cannot be directly correlated. Furthermore, torque controllers measure only the power drawn by the rolls, which can vary with the condition of the rolls and mandrel, lubrication, operator fatigue and other factors.
3. Mechanical rolling reduces the tube wall by; a) stretching the tube radially, and b) imposing high unit rolling forces that cause the tube to extrude axially. Hydro expanding, however, only stretches the tube radially. The amount of wall reduction is barely measurable and, in fact, the tube end pulls in slightly as the tube is bulged out rather, than extruding.
4. Hydro expanding produces no surface effects on the tube and almost no work hardening. You never get bell shaped or hourglass shaped tube ends. Therefore, the tube-to-wall contact is always uniform.

5. When you roller-expand tubes into grooved holes, tube metal extrudes into the grooves. But, when you Hydro-expand tubes into grooved holes, the tube bulges into the groove, providing additional tightness at the contact of the groove edges with the tube.
6. Mechanical rolling may cause tube-end fatigue, depending upon the frequency and amplitude of the stresses the rollers apply. The frequency is far more effective in producing fatigue than the amplitude. That is why five or seven roll expanders are used when the tube material is subject to fatigue. From the fatigue standpoint, Hydro-expanding is like having an infinite number of rolls.
7. The high contact stresses imposed by rolling make it more likely that stress corrosion will cause tube-end failure. The transition from the reduced wall is a possible trouble source in rolled tubes.
8. You can Hydro-expand the tubes to the exact rear face of the tube sheet, thereby reducing the chance of crevice corrosion at the rear. This is accomplished by the uniformity of pressure being applied to the entire tube length at the same time. With mechanical rolling methods you are pushing the tube material out the rear of the tube sheet and because of this; you create a very noticeable rear crevice, resulting in premature tube failure.
9. The extreme ease of operation of the HydroPro requires almost no training.
10. If tube rollers cease and stall, the rolling motor may spin and injure the worker. HydroPro is completely safe.
11. To roll tubes into tube sheet thicker than 2", you have to step roll. This is time consuming and requires a tremendous amount of skill. You can Hydro-expand tubes into any thickness of tube sheet with one pass of the mandrel per tube.
12. When you re-roll leakers after hydro testing, you further reduce the tube wall. Also, you may move the ligaments enough to start other leaks and may even cause ligament damage around the other tubes. This can also create problems in having to chase the leaks completely around the tube sheet, creating even more problems, and so on. With Hydro-expanding, because you can accurately control the exact expansion pressure, you can eliminate the problem of having to re-expand leakers. If you do have a leaker, you know exactly which pressure will provide a seal without disturbing any of the adjacent holes.
13. Expansion time depends on the tube material and averages from 2 to 5 seconds per tube. Only one worker is needed to do the work. Tube ends are prepared in the same way as for roller expanding. Note that tubes would tear up rolls and cages or break mandrels will damage o-rings and backups.
14. Hydro-expanding is successful in out-of-round holes and in holes distorted by tube plugging. However, axial scratches in the hole or tube material will cause leaks in any expanded tube to tube sheet joints, regardless whether expanding by rolling, near contact explosions, compressing a rubber expander, or by hydro-expanding. Therefore, it is recommended that scratched holes be burnished free of axial scratches or a groove be cut into the tube sheet. It might be further noted that because of the uniformity of hydraulic expansion, it does further reduce the probability of axial scratches when retubing. The extraction of hydro-expanded tubes will be extremely even and uniform, thereby producing cleaner tube holes ready for re-tubing.

## TABLE : 1 SAMPLE CALCULATION

| TABLE SHOWING THE PRE-THINNING, % FINAL THINNING, INTERFERENCE REQD,FINAL THK,FINAL ID. | | with interference of 0.024 inches | with interference of 0.024 inches | with interference of 0.040 inches | with interference of 0.040 inches | Final thk of tube due to 12 % | Final thk of tube due to 12 % |
|---|---|---|---|---|---|---|---|
| DO1 | Tube OD | 50.8 | 50.8 | 50.8 | 50.8 | 50.8 | 50.8 |
| T1 | Tube thk | 3.66 | 3.66 | 3.66 | 3.66 | 3.66 | 3.66 |
| DI1 | Tube ID | 43.48 | 43.48 | 43.48 | 43.48 | 43.48 | 43.48 |
| | | | | | | | |
| A1 | Tube area | 542.03 | 542.03 | 542.03 | 542.03 | 542.03 | 542.03 |
| DO2 | tube hole dia | 51.60 | 51.90 | 51.60 | 51.90 | 51.60 | 51.90 |
| A2 | tube hole area | 2091.17 | 2115.56 | 2091.17 | 2115.56 | 2091.17 | 2115.56 |
| A3 | Area of of enlarged tube | 1549.14 | 1573.53 | 1549.14 | 1573.53 | 1549.14 | 1573.53 |
| DI2 | ID of the tube after contact | 44.41 | 44.76 | 44.41 | 44.76 | 44.41 | 44.76 |
| | | | | | | | |
| M1={DO1-DI1)-(DO2-DI2)} | prethinning | 0.13 | 0.18 | 0.13 | 0.18 | 0.13 | 0.18 |
| M2=DO2-DO1 | Clearance | 0.80 | 1.10 | 0.80 | 1.10 | 0.80 | 1.10 |
| M3 | Interference | 0.61 | 0.61 | 1.02 | 1.02 | 0.86 | 0.86 |
| | | | | | | | |
| M4=(M1+M2+M3) | Total increase in Id | 1.54 | 1.89 | 1.95 | 2.30 | 1.79 | 2.14 |
| | | | | | | | |
| DI3=DI1+M4 | **Final ID** | **45.02** | **45.37** | **45.43** | **45.78** | **45.27** | **45.62** |
| T2=(DO2-DI2)/2 | Thk after prethinning | 3.59 | 3.57 | 3.59 | 3.57 | 3.59 | 3.57 |
| | | | | | | | |
| T3 | **Final thk of tube** | **3.29** | **3.27** | **3.09** | **3.06** | **3.16** | **3.14** |
| 100*(T2-T3)/T2 | **% thinning** | **8.48** | **8.54** | **14.13** | **14.23** | **12.00** | **12.00** |

➢ *SOURCE: WWW.SCHLECHTRIEM.DE – German vendor for tube expander*

***EXPANSION LIMIT FOR EXPANSION OF TUBES***

Tube expansion can be compared to the cold rolling of steel sheets. The tube to be expanded can also be equated with an endless steel sheet, which, during the rolling process, has been lengthened or enlarged to a point when the external diameter of the tube equals the diameter of the tube sheet hole.
This first stage is called 'metal to metal contact'. Note that the expansion at this stage is not yet leak proof.

Further rolling is necessary to increase the expansion and reach the point when the material is deformed. This creates tension because of the compression between the tube and the tube sheet. A leak proof expansion is assured if the pressure tension is greater than the service pressure, which arises from the heating, the lengthening and finally the tension of the medium. The difference of expansion between the 'contact' and the final expansion is called 'expansion limit'.

This 'expansion limit' must never cause a rupture in the cohesion of the molecules of the tube material by an exaggerated deformation of the material. If this were the case the tube material could become damaged – it could crack or break – and this would create the danger of explosions etc. when the tube comes under high pressure.

It could then happen that, though the tests had turned out positive, the tube would prove useless after a few days in service.

***EXAMPLE***

| | | |
|---|---|---|
| Tube dimension | : | 30 X 3 mm |
| Tube sheet hole | : | 30.4 mm |
| Less 2 X 3 mm tube wall thickness | : | - 6.0 mm |
| Theoretical internal diameter of the tube at ‘metal to metal contact’ | : | 24.4 mm |
| Plus expansion limit i.e. 20% of the tube wall thickness | : | + 0.6 mm |
| Theoretical ID of tube after having reached the expansion limit | : | 25.0 mm |

Recommended expansion range:

Metal to Metal contact: about 3 -5 % of tube wall thickness
Expansion limit: about 15 - 20% of tube wall thickness

➢ *SOURCE: TRISTAR TUBE EXPANDERS*

***WHAT IS CORRECT EXPANSION OF TUBES?***

Correct expansion of tubes is the forming of a 100% bond between the tube and tube sheet, a result of reducing the tube wall by 4 to 5%. Anything less or more will result in under- or over- expansion.
By using controlled rolling motors with the proper tube expander, correct expansion can be assured automatically.

The basic purpose of tube expansion is to obtain a good hydraulic and mechanical joint. A secondary, but equally important, purpose is to obtain a seal that is durable, resistant to corrosion and essentially

free of longitudinal stress. During tube expansion we must take care of “Over Expansion” and we do take care of “Under Expansion”. The under expansion is detected during hydraulic test and can be corrected by re-expanding. But, over expansion cannot be detected easily and it imposes excessive stresses in the material of the tube and tube sheet. This results in damage to the ligament and a poor joint.

The optimum expansion is the one that develops a tight joint with adequate strength and with minimum stress. The Torque needed for achieving optimum tube expansion varies with the tube diameter, tube thickness, tube sheet thickness, tube material and tube sheet material. Obviously we must determine some relation between the amount of tube expansion and the amount of torque required to achieve that. Many feel that the manufacturer should specify the torque needed for particular combination of various conditions. Since many preferential factors come into play like the desired amount of expansion, the lubricant used, the expansion length set on expander etc. it has to remain with the user to arrive at the torque figure. It is recommended that a group of about five tubes be expanded, measuring the results after every expansion. Comparison of the measurements with the calculated figures will enable decision making on the increase or decrease of the torque to be applied. Once the correct torque is determined the same has to be repeatedly applied for all tubes.

One of the widest methods of determining tube expansion is to determine the percentage of wall reduction of the tube being expanded. The wall reduction is due to thinning of the tube wall after the tube outer diameter comes into contact with the tube sheet bore during Tube Expansion. Tube walls of non-ferrous tubes in condensers are reduced by 3 to 4 % to get an optimum joint. A wall reduction of 8 to 10% in the case of ferrous tubes in Heat Exchangers is considered optimum, whereas non-ferrous tubes require to be reduced by 8 to 12% due to the pressure involved.

## *AUTHOR’S EXPERIENCE*

- *TUBE EXPANDING OF BOILER BANK TUBES FOR BIDRUM BOILERS.*

In the following paragraphs the experience of the author in the field of boiler is brought out. Bank tubes become a design requirement in case of boilers with main steam pressure of 44 kg/cm2 and below. This due to the fact that the evaporator duty is more at lower pressures and sufficient heat transfer surface can be provided in less space only with bidrum bank tube design. Bank tubes are necessarily expanded in to the tube holes provided in steam & lower drum. To erect boiler bank tubes, the lower drum is usually erected first as the slinging will be easier. A temporary steam drum lifting structure has to be used for erecting the steam drum. Both the drums are aligned and relatively positioned as per the design requirement. Now in the following paragraphs, the care to be taken for tubes expanding is brought out.

### *1. Cleanliness and surface condition*

When installing and rolling tubes, it is extremely important that both the tube and tube holes be clean and relatively smooth and maintained in this condition until the joint is rolled. Any foreign matter on either surface can prevent a tightly rolled joint. Particular attention must be given to the cleanliness of these items. Once the tubes have been stuck in the drum, the tube should be rolled immediately. Tack rolling now and final rolling later is a bad practice. Immediate final rolling will minimize the chance of rust or foreign matter from accumulating in the annular space between the tube and tube hole. Both the tube and tube hole should have a slight chamfer on their edges to minimize the chance of them scratching each other.

*2. Tube ends preparation*

Prior to installing the tubes in the drum, the outside of the tube ends must be cleaned and free of burrs and shall not have chatter marks, tears, drags, scratches, etc running length wise. Swaged tube ends must be thoroughly prepared with emery paper or by puffing. The surface roughness shall not exceed 125 microns. The surface shall be free from films or contaminant such as oils, water, paint and preservatives as determined by a visual examination or a solvent dampened white cloth.

The tubes should be clean for about 300 mm on one end to be stuck first and 150 mm on the other end. This will prevent any foreign matter from rubbing off the tube onto the tube hole when the tubes are stuck.

The inside of the tube ends must be free from contamination such as sand, mud, metal chips, weld slag, etc for the full depth of the tube expander.

*3. Tube holes preparation*

The tube holes in the drum where the tubes are to be stuck must also be clean and free of burrs and shall not have chatter marks, tears, drags, scratches, etc running lengthwise. The surface roughness shall be 200 - 300 micro inches as per ANSI B 46.1 the surface shall appear metal clean when magnified under normal lighting. Sharp edges shall be removed. The surface shall be free from films or contaminant such as oils, water, paint and preservatives as determined by a visual examination or a solvent dampened white cloth.

When a visual examination is not possible and the surfaces are inaccessible, a dry white cloth wipe shall be done. If either cloth exhibits indications of contaminant, the system shall be re-cleaned or the specific contaminant shall be determined and evaluated as to its potential deleterious effect.

When there is a groove or serration in the tube sheet, particular attention should be paid to insuring that the groove is clean. The diameter of the tube hole is based on the following:

Diameter of tube hole = Nominal dia of the tube plus 0.8 mm. Tolerance shall be +0.000 mm and –0.300 mm

*4. Sequence of tube installation and expansion*

The sequence in which tubes are expanded is critical. Using the wrong sequences can cause the drums to go out of roll and level. Another important aspect is to insure the tube is parallel with the tube hole. If the tube is slightly crooked relative to the tube hole, it is virtually impossible to get a properly rolled joint. The angle the tube hole is drilled at, the angle the tube is bent at, the length of the tube stock and the ovality of the drum will all affect the parallelism.

*4.1 Master tubes*

Due to several factors such as drum ovality, error in drilling angle, error in tube bending angle are going to contribute to varying length of tube projection inside the drums. Hence bank tubes are fabricated with an additional allowance in length this additional length is trimmed off at site. Now insitu cutting can be adopted if the required portable facing machine is available. A better way is to take a set of tubes called master tubes. A set of tubes is inserted in to the drums, aligned, and drum inner contour is marked and removed. These tubes are sized keeping the belling allowance of 10

mm on both ends. Now these tubes can be used as master tubes. The balance tubes can be now sized as per the master tubes, at ground before lifting to position. This saves considerable time.

### *4.2 Torque control for tubes expansion.*

Electrical drive is extensively used in INDIA. The amount of tube thinning can be controlled by the torque control unit manufactured for this purpose. The torque values are to be set using the mock up tube sheet & trial tube lengths. Two mock up tube sheets are required matching the steam drum & water drum thickness. The tube holes are drilled as per steam drum / water drum. The trial tube lengths should be of the same diameter & thickness as per the bank tubes. If the tube ends are swaged, then the trial tubes should also be the same. The torque required is set to achieve the design % thinning. The ID of the hole prior to rolling is recorded. The tube ID required after rolling is calculated based on the thinning required. Now the torque is set on trial and error method by gradually increasing the torque values until the desired thinning is achieved. The mock up tube sheet shall have at least 9 holes for this purpose. The desired thinning for Boiler tubes is 8 to 10 %.

### *4.3 Sequence of expansion*

#### *4.3.1 Stage 1*

After the drums have been properly aligned, central two of tubes, and expanded to maintain drum alignment. The two center longitudinal rows R9 & R10 should be installed as per the sequence shown in figure 4.

#### *4.3.2 Stage 2*

Then two sets of circumferential columns tubes (C1, C2 and C25, C26) near the end of the drum should be installed. The sequence shall be as per the figure 5. By this clockwise and counterclockwise sequence the twisting of the drum can be prevented.

#### *4.3.3 Stage 3*

The tubes in rows R8 & R11 are erected as per the sequence shown in figure 6. In the same way rest of the bank tubes are erected. The longitudinal and circumferential reference tubes erected in stage 1 & 2 are used for aligning the all the rest of the tubes. Here again the clockwise and anticlockwise rotation will help in preventing twisting of drum axes.

#### *4.3.4 Stage 4*

The loading sequence of the tubes is not important, while full rolling of the tubes should be as per the sequence suggested. Tube to tube spacings is maintained by wooden spacers. Piano wires are used for checking the alignment of tubes. Simultaneous expansion in upper and lower drums must be practised. While expanding tubes care should be taken not to spill lubricants inside the tube to drum joint. The cleanliness inside the drums will help in preventing leaky joints.

## ***SUMMARY***

As far as the tube expansion of boiler tubes are concerned one may not find enough literature. Over expansion of boiler tubes are frequently encountered in many cases. The reason is mostly the insufficient knowledge on the part of the personnel who execute the job. Tube expansion is as an art

and only few take serious steps to maintain the quality of workmanship. It is hoped that the above article is useful to the readers.

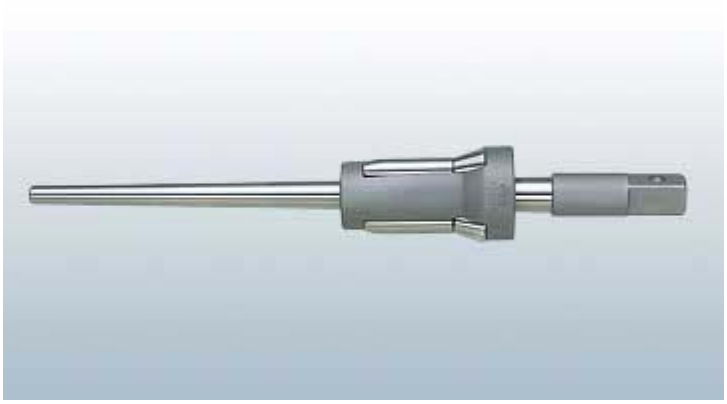

**Figure 1 TUBE EXPANDER**

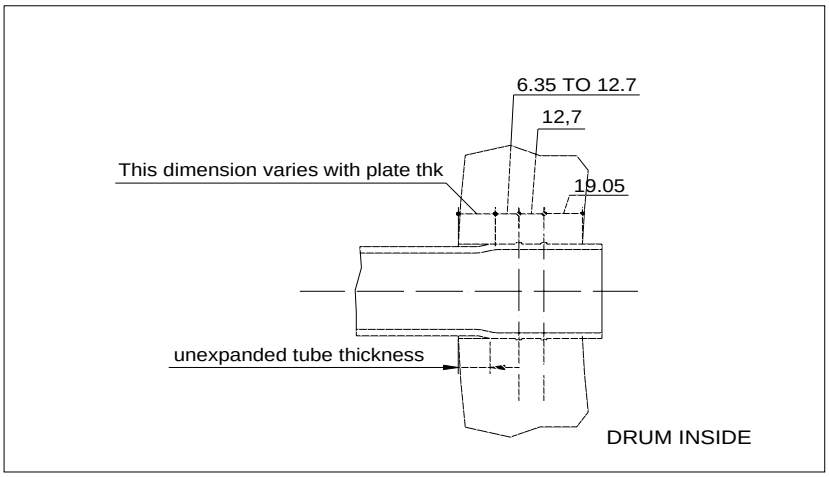


FIGURE.2. SKETCH SHOWING ARRANGEMENT OF TUBE, TUBE SHEET, AND LENGTH OF EXPANDED SECTION OF TUBE FOR HEAVIER PLATE THICKNESS

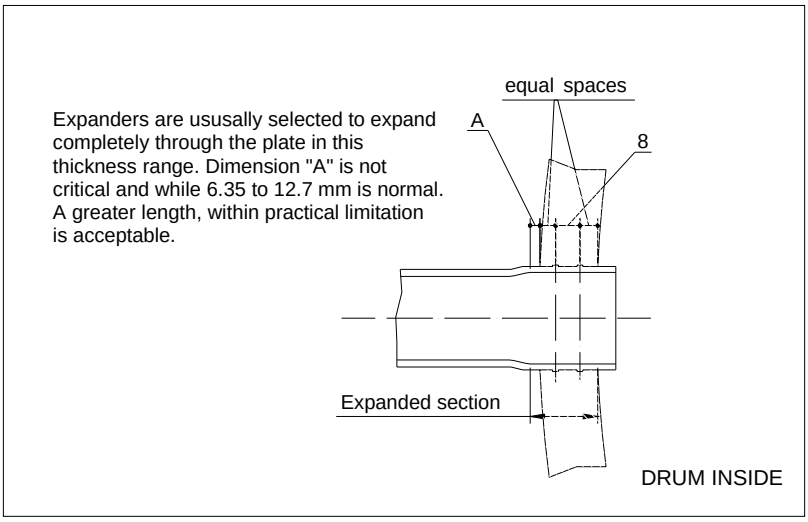


FIGURE. 3. SKETCH SHOWING ARRANGEMENT OF TUBE, TUBE SHEET, AND LENGTH OF EXPANDED SECTION OF TUBE FOR THINNER PLATE THICKNESS

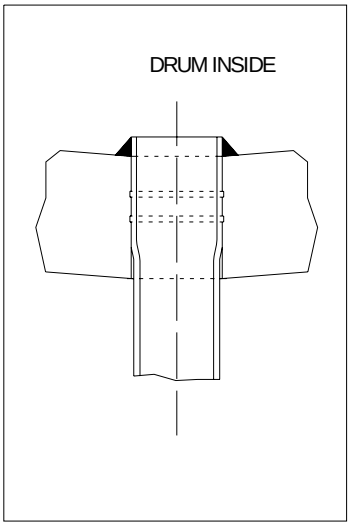


FIGURE.4. INSIDE SEAL WELD ( DRUM)

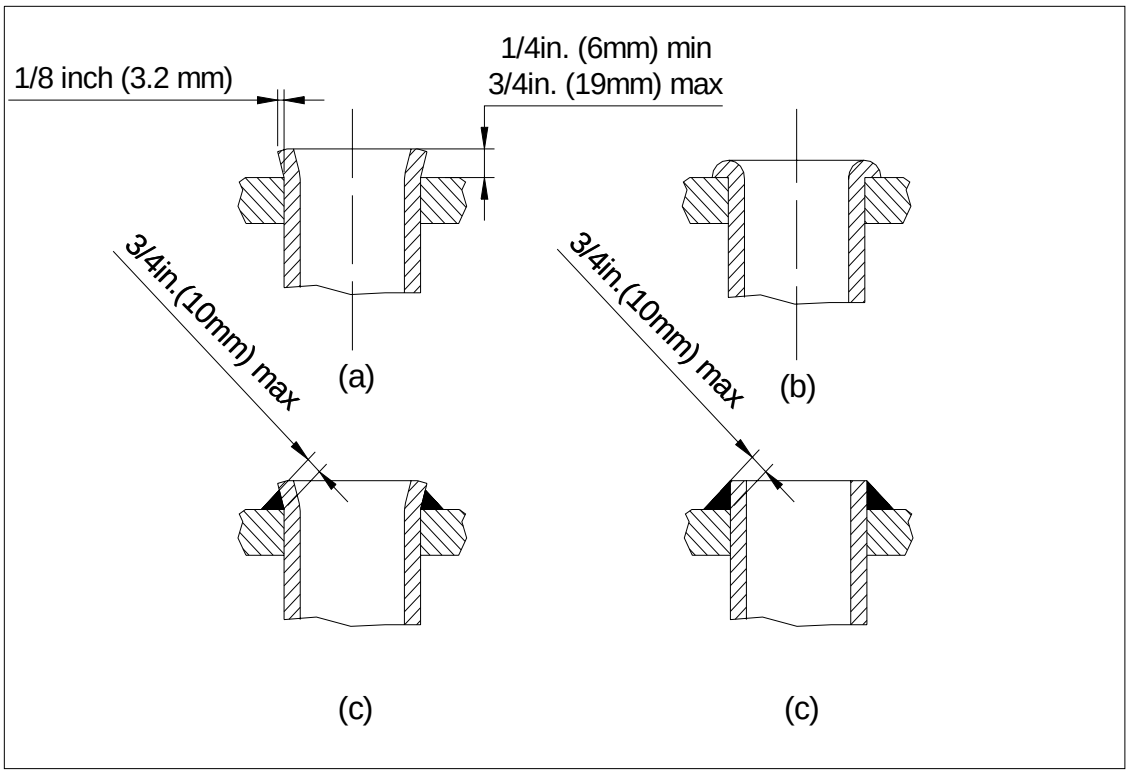


FIG PWT-11 EXAMPLES OF ACCEPTABLE FORMS OF TUBE ATTACHMENT

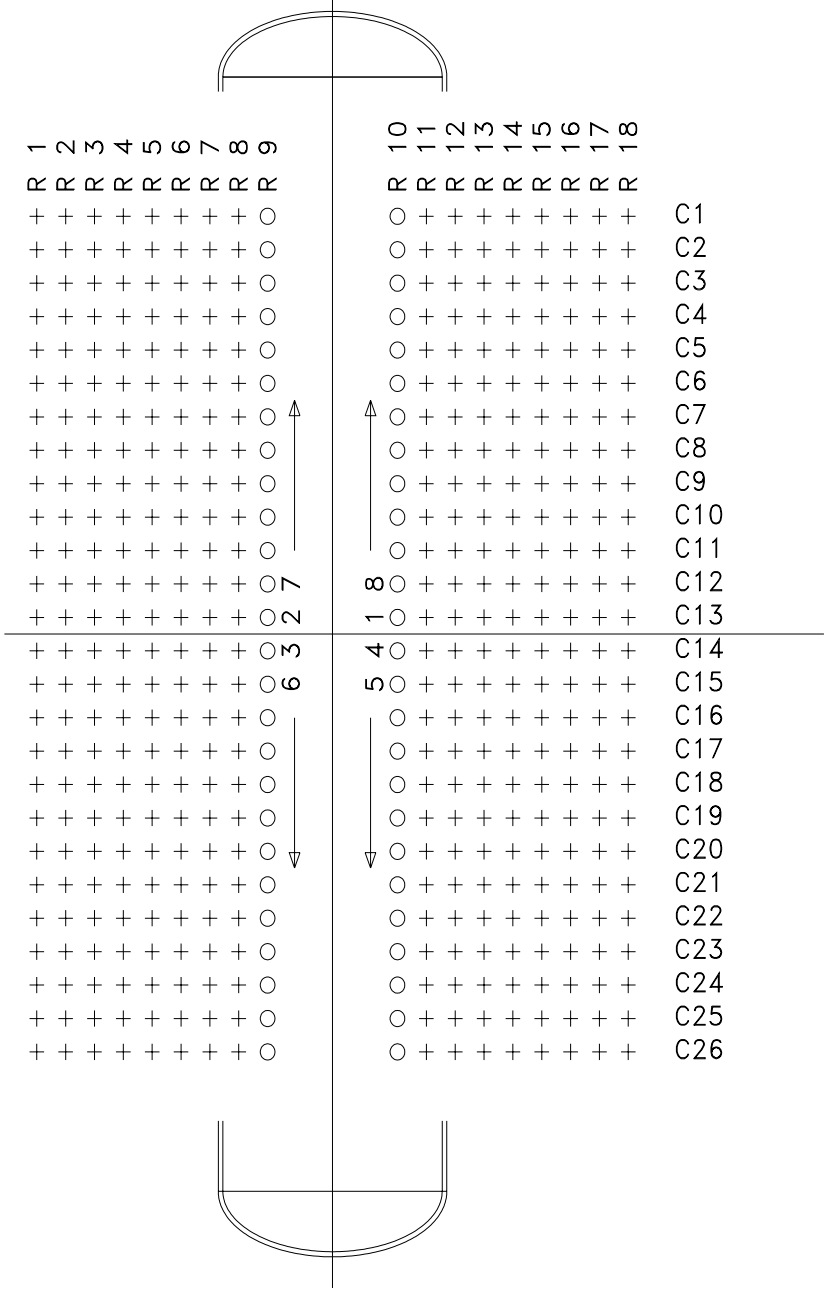


FIG 5.EXPANSION SEQUQNCE – STAGE 1

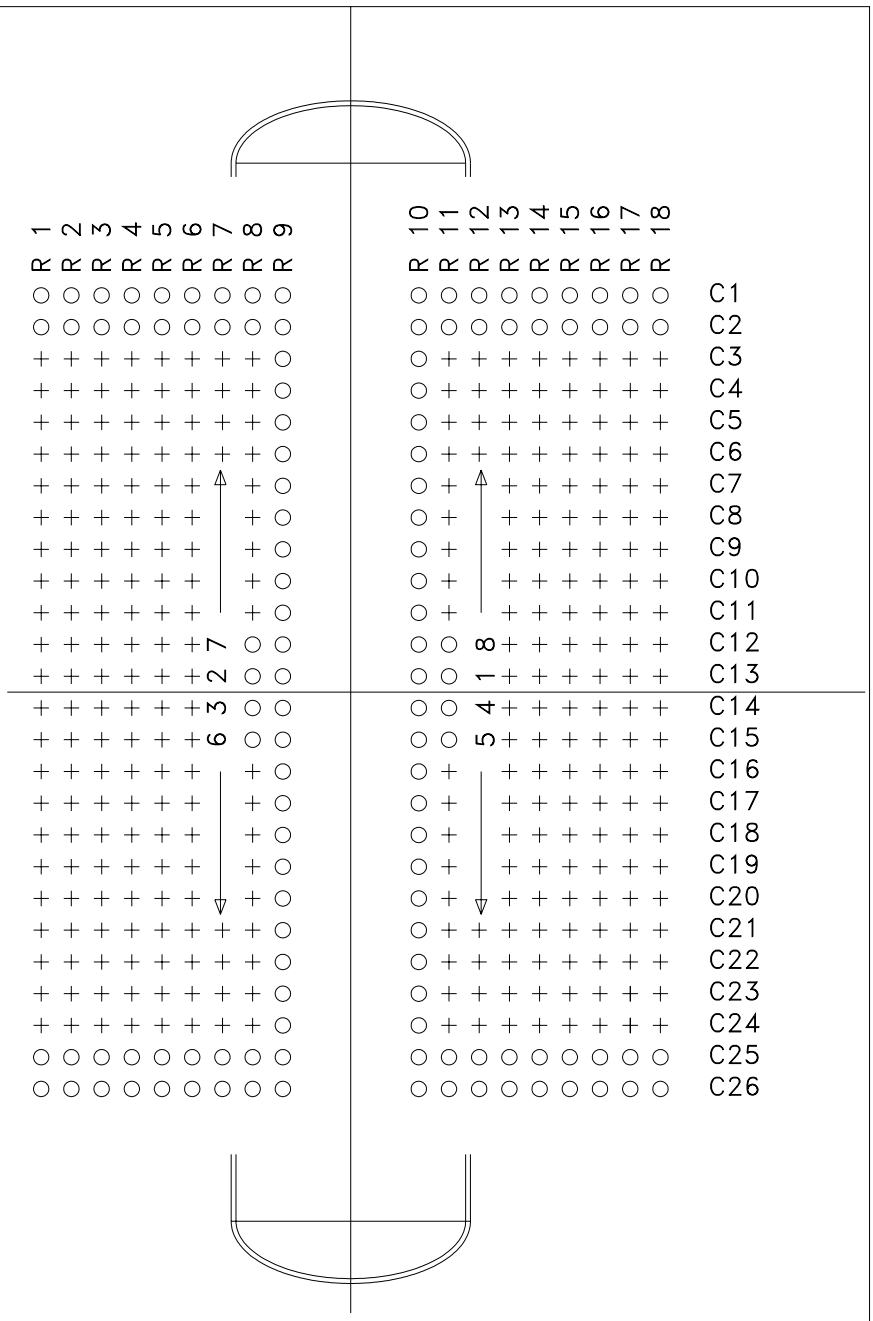


FIG 7.EXPANSION SEQUQNCE – STAGE 3

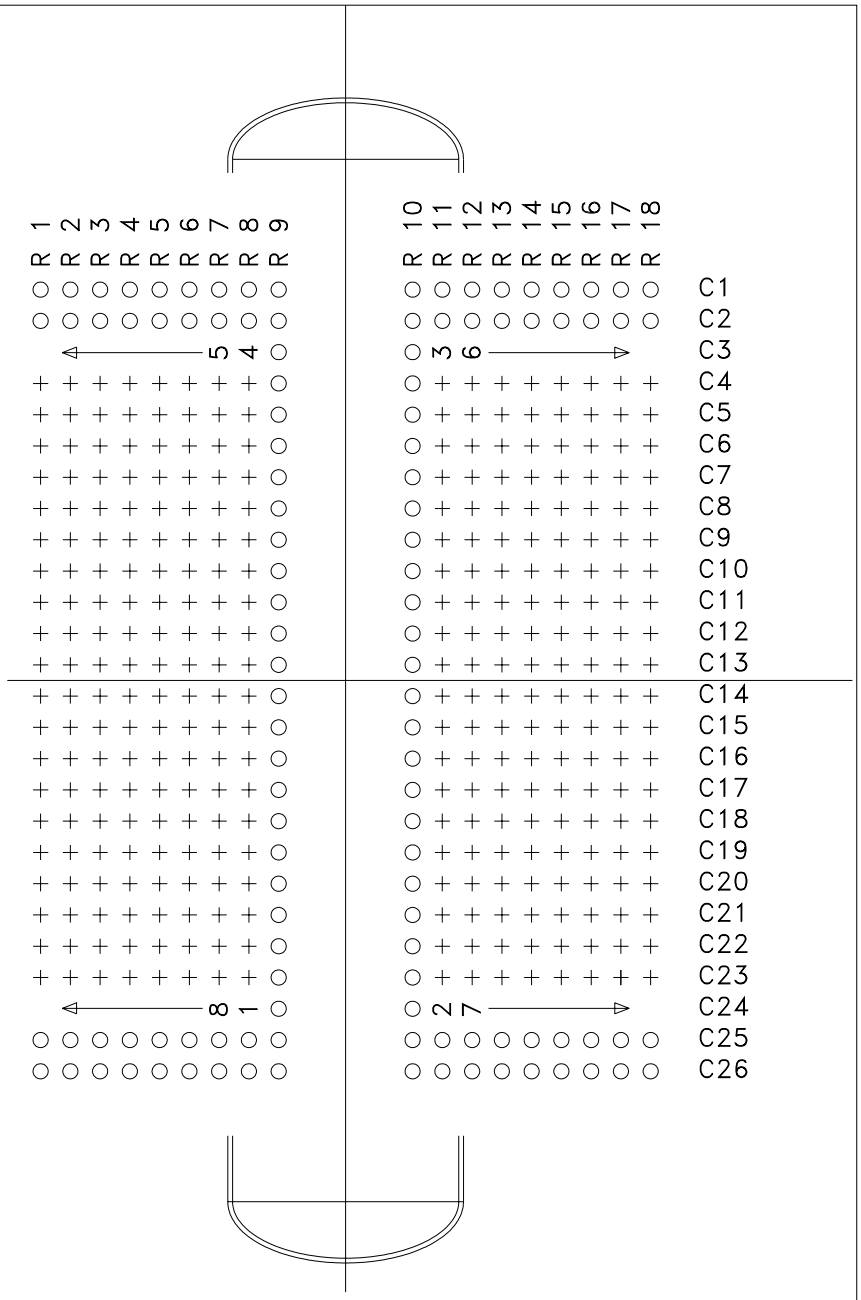


FIG 6.EXPANSION SEQUQNCE – STAGE 2

## LESSONS LEARNT FROM TROUBLESHOOTING

### *INTRODUCTION*

A boiler with trouble can make the industry sick. It is necessary to stop living with problems. Interactions with manufacturer could help to find solutions. Boiler users may have to spend for regular audit of the boilers. A budget for training and annual inspection would prove worth for achieving better availability & better efficiency of the boiler.

### *CASE 1: STRESS INDUCED CORROSION IN EVAPORATOR COILS*

- Problem: A metallurgical boiler tubes failed soon after the first light up.
- Diagnosis: The hydrotest of the boiler was done with DM water but without ensuring the pH was 9.5. The forced evaporator circuits were non drainable. The attachment welds at Evaporator spacer shoes were heavy. Being carbon steel, the stress relieving was not done at factory. But due to uncontrolled weldment size the amount of locked up stresses was high. Once the low pH water was available, the $H^+$ ions diffused through grain boundaries. When the boiler was fired, the hydrogen ions led to long chain of cracks.
- Lesson: Water used for hydro must be of 9.5 pH. The water should be blown out from non drainable sections. Weldment sizes are not to be heavy. The PWHT should be practiced in case of heavy weldment.

### *CASE 2: TUBE FAILURE IN WATERWALL*

- Problem: Tube failed only in one particular water wall tube (both left & right side of water wall at identical location).
- Diagnosis: The boiler was basically designed for under bed firing of rice husk. The boiler had provision for firing husk in over bed. Customer had operated the boiler mostly on over bed. In general about 35% of the heat is absorbed by the under bed firing due to better temperature in the bed. The heat pick up was now fully by water wall rather than the bed. The boiler was provided with a baffle to prevent gas bypassing in the gap between the ends SH coils and water wall. These baffles prevented heat transfer and these tubes started starving. The baffle was removed.
- Lesson: Uneven heat transfer can result in result in poor circulation in natural circulation design.

### *CASE 3: DUST POLLUTION FROM BOILER*

- Problem: Increased dust pollution from chimney. The dust pollution had gone up due to poor maintenance in Mechanical dust collector.
- Diagnosis: The mechanical dust collector casing had failed due to condensation of gases. The air ingress had let to the reversal of dust in cyclones. Moreover while replacing the mechanical dust collector cones the required dimension controls were not observed. A dust trap was introduced below the ID fan suction box casing. Further a water trap was added in the ID fan delivery ducting. This was also done in another installation as the customer had complaints from residents surrounding the factory.
- Lesson: MDC maintenance should be done with care, preferably under the supervision of quality control supervisor from manufacturer. The MDC checklist can be referred at the end of this paper.

### *CASE 4: DEAERATER STEAM HAMMERING EXPERIENCED AT TIMES*

- Problem: An 80 TPH boiler with a deaerator developed hammering at times.
- Diagnosis: The level control valve was found to be crack open (less than 5%) during normal operation. The pressure drop inlet pressure was supposed to be 3 kg/cm2 g, where as the actual pressure were more than 8 kg/cm2 g. Due to high inlet pressure, there will be wide variation in water flow even for a small variation in valve opening. The transfer pump was meant for transferring water to distant boiler as well. Hence the pump discharge pressure could not be changed. Hence a pressure killing orifice was added to overcome the problem.
- Lesson: Control valve operation must be logged in commissioning report.

### *CASE 5: DUCTING SYSTEM DESIGN DEFECT*

- Problem: A 60 TPH boiler could not generate beyond 55 TPH. The ID fan impeller change / Fan change did not help.
- Diagnosis: The ducting system sizing was reviewed. The high pressure drop causing locations were identified and rectified. Even the chimney inlet opening in the concrete chimney was broken and increased to remove the excess pressure drop in the ducting system. The O2 level which was earlier not detectable was now 6% in the flue gas.
- Lesson: High velocity gas ducting is not good. The order of pressure drops could be high depending on velocity particularly at restrictions.

### *CASE 6: HIGH UNBURNT CARBON IN ASH*

- Problem: An 80 TPH FBC boiler was recording high unburnt level (as high as 18%) in ash. Other boiler with the same fuel was having less unburnt in ash (as low as 5%).
- Diagnosis: The air ingress was severe in roof top. The O2 analyzer was located in after the economizer was showing 4-5% O2 level. Looking at O2% in boilers with air ingress can be wrong. We need to optimize the O2 based on carbon loss in ash. Pictures above show the leakages in roof.
- Lesson: air and gas leakage test is a must. A meticulous check is a must as otherwise the resulting losses will be huge.

### *CASE 7: BANK TUBE LOOSENING & WATERWALL DISTORTION*

- Problem: A 35 TPH boiler just after commissioning met with loosening of all bank tubes in drums.
- Diagnosis: The man posted at drum level confirmed the water level was maintained all the time. From the circular chart recorder the feed water flow was found to be erratic. The line valves from BFP to drum were all in throttled condition. The control valve was operating under throttled condition. Practically the FCV was crack open. There were no positive down comers envisaged by the boiler supplier. The gas temperature at boiler bank was sufficiently high and it could reverse the water flow in heated down comers (last three rows of bank tubes). Drum internal modification was suggested. VFD was suggested as an immediate measure, so that water flow was not disturbed. Customer did not take action. In the next month the total water wall tubes were found to be twisted. Then the customer went for VFD for pump. All the water wall tubes were replaced.
- Lesson: oversized feed pump / wrong selection of BFP can create intermittent flow to boiler.

### *CASE 8: REPEATED SHELL TUBE WELDMENT IN 2 PASS INLET*

- Problem: A customer was very upset over repeated failure almost everyday at the same weldment. Recently the boiler was retubed and the problem started. He thought it was a workmanship problem. But even after the repeated replacement, the problem continued.
- Diagnosis: As such the shell tube weldment was experiencing high gas inlet temperature. The type of weldment was wrong. Wherever there was excess weldment, the weldment was failing again and again as it was not getting the proper cooling. The J groove weldment design was recommended and the problem did not repeat.
- Lesson: The boiler must be repaired under the guidance of QC inspector from manufacturer. This helps in ensuring the right workmanship.

### *CASE 9: LOW STEAM TEMPERATURE FROM BOILER*

- Problem: A Customer having a 130 TPH boiler started experiencing very low steam temperature.
- Diagnosis: On inquiry the water quality slippage was noted. Foaming was suspected as there was water level was not steady in the steam drum. The source of water was changed ten days back. The water came with high TSS. This has led to slippage of suspended impurities in to the boiler. The Boiler was stopped for 8 hours. During this time heavy blow down was given from all the bottom drains. Next day the steam temperature returned back to normal.
- Lesson: Regular check on total suspended solids check in condensate and make up will help to identify the foaming problem.

### *CASE 10: WATER LEVEL WAS NOT STEADY IN A 10 TPH BI DRUM BOILER*

- Problem: The water level jumped by near about 50 mm within 10 seconds.
- Diagnosis: Foaming was suspected. The sources of water were reviewed. The process condensate was clean as it was a closed system. The lines were of stainless steel. The make up water pH was being boosted at condensate storage tank. However the DM water storage tank was made of carbon steel. The manhole cover itself revealed the amount of corrosion products that was generated.
- Lesson: Boosting of DM water pH is a must at the outlet of DM plant itself.

### *CASE 11: FREQUENT GAUGE GLASS FAILURE*

- Problem: The gauge glass gasket failed very often. The problem was seen in all three boilers. The pressure of the boiler was 88 kg/cm2g.
- Diagnosis: Condensate was found to be forming in the long extension pipe. This was dripping from the steam tapping line through the gauge glass. There could be considerable heat coming to gauge glass. It was recommended to add interconnection pipe before gauge glass. Further the insulation of extension pipe was to be redone. There could be foaming in all boilers due to suspended impurities in feed water.
- Lesson: Monitoring total suspended solids is not to be ignored.

### *CASE 12: REPEATED BANK TUBE FAILURE*

- Problem: The bi drum boiler is a saturated steam boiler without economizer. The pressure of the boiler is 21 kg/cm2g. The client reported that the bank tubes were failing repeatedly in one particular row only.

- Diagnosis: The boiler was shut and offered for inspection. Found loose corroded iron particles in the headers, drum, and feed water tank. The cause for corrosion products was the low pH water from RO plant. The piping from treated water storage tank was of carbon steel. However the tank was made of SS. The chemical dosing was done in the feed water tank. The centre bank tube being insulated from heat transfer by the gas baffles, the circulation is expected to be poor. Hence the loose deposits inside the tubes were operating as sites for local corrosion. Pitting corrosion was seen below the rust bubbles inside the tubes.
- Lesson: The piping from water treatment plant should be of SS.

***CASE 13: CHIMNEY VIBRATION***

- Problem: The 2 TPH boiler chimney was vibrating at high frequency. In the nearby houses, the vibration was felt by residents at night.
- Diagnosis: The vibration was due aerodynamics from ID fan. The cut off between impeller and the casing was increased and this solved the problem.
- Lesson: When it comes to high frequency noise or vibration the source can be the fans in most of the cases.

***CASE 14: FD FAN NOISE***

- Problem: The 30 TPH FBC boiler FD fan was making such a noise that it could be heard from the factory main gate.
- Diagnosis: The inlet guide vane direction of opening was found to be wrong. This was inferred from the fact that the noise was gone when the IGV was fully open.
- Lesson: The inlet guide vane opening has to match the casing orientation.

***CASE 15: NON-PERFORMANCE OF PA FANS***

- Problem: There were 2 x 100% PA fans used for under bed fuel feeding in FBC boiler. Though each fan was designed for 100% duty, both the fans had to be run.
- Diagnosis: There was considerable recirculation of air through the standby fan. The multi-louver damper was not fully sealing. This was replaced with a guillotine type gate.
- Lesson: Isolation gates are very important for high pressure fans.

***CASE 16: NON-PERFORMANCE OF ID FANS***

- Problem: The 2 x 60% ID fans were found to be insufficient for the service.
- Diagnosis: The inverted ‘T’ duct was found to be the cause for the problem. The duct was modified to inverted ‘Y’ duct in the best possible manner.
- Lesson: Fan performance always related to ducting in most of the cases.

***CASE 17: NON-LOADING OF FD FANS***

- Problem: The 2 x 60% FD fans were meant for FBC under bed operation. One of the FD fan was taking much lower current than the other for the same % opening.
- Diagnosis: The FD fan discharge connections were not correct. Such a high pressure fans having discharge at right angle was the problem. ‘T’ duct connection was modified to a ‘Y’ duct connection.
- Lesson: Poor Fan performance is mostly related to poor ducting layout. Have it checked before going for replacement of fans.

### *CASE 18: CAUSTIC GOUGING IN BED TUBES IN AFBC BOILER*

- Problem: The FBC boiler bed coil tubes were failing often and caustic gouging indication was available inside the tubes.
- Diagnosis: This was a single drum high pressure (105 kg/cm2g) FBC boiler. The water side parameters were checked and found to be very good. Customer was very much aware on the coordinated phosphate control and was found to be practiced. Vendor diagnosed there was circulation was poor. The risers were modified by vendor but yet the problem continued in new bed coil tubes. A mistake in drum internals arrangement was diagnosed to be the cause. The feed water distributor pipe was running just above the down comer.
- Lesson: Poor circulation can cause water chemistry related problems.

### *CASE 19: MUD INSIDE BOILER AND INEFFECTIVE SOFTENING*

- Problem: The shell cum water wall type boiler had failed due to heavy scaling. After retubing the problem persisted. There was heavy carryover of water in steam all the time.
- Diagnosis: The entire bottom headers had accumulated mud. The inside of the shell revealed the presence of high level of suspended impurities. The softener was preceded by a multigrade sand filter. The source of water contained high level of mud as the open storage indicated. The outlet water of MGF was checked. It was having mud. Customer was regenerating the MGF only when the softener was to be regenerated. It was clear that the MGF sizing was not adequate to handle the inlet suspended matter. I advised to add a water flow meter immediately so that the regeneration of the MGF could be done based on M3 of water passed. The MGF had to be replaced. There was no softened water storage tank. The water was being pumped directly to the feed water tank. Client was advised to provide a separate treated water storage tank.
- Lesson: Slippages in water quality occur for several reasons. A separate treated water storage tank is a must. Regular analysis of water of the treated water storage tank would avoid mishaps.

### *CASE 20: BED COIL FAILURE*

- Problem: The bed coil failed in a new installation. The Customer had complained the tube had swollen and failed. But there was no blockage in the failed tube.
- Diagnosis: The boiler was not provided with provided with hand holes for cleaning. After the alkali boil out, it was not possible to clean the bottom headers. Introduced hand hole stubs for all the headers and cleaned the boiler fully.
- Lesson: After alkali boil out a thorough cleaning of the boiler is a must. Many boilers had failed due to negligence of a thorough cleaning after the boil out.

### *CONCLUSION:*

Boiler users experience varieties of problems in the installations. The problems arise due to basic design defects and technology gap of the O&M personnel. A regular training program / interaction with manufacturer could help to find solutions.

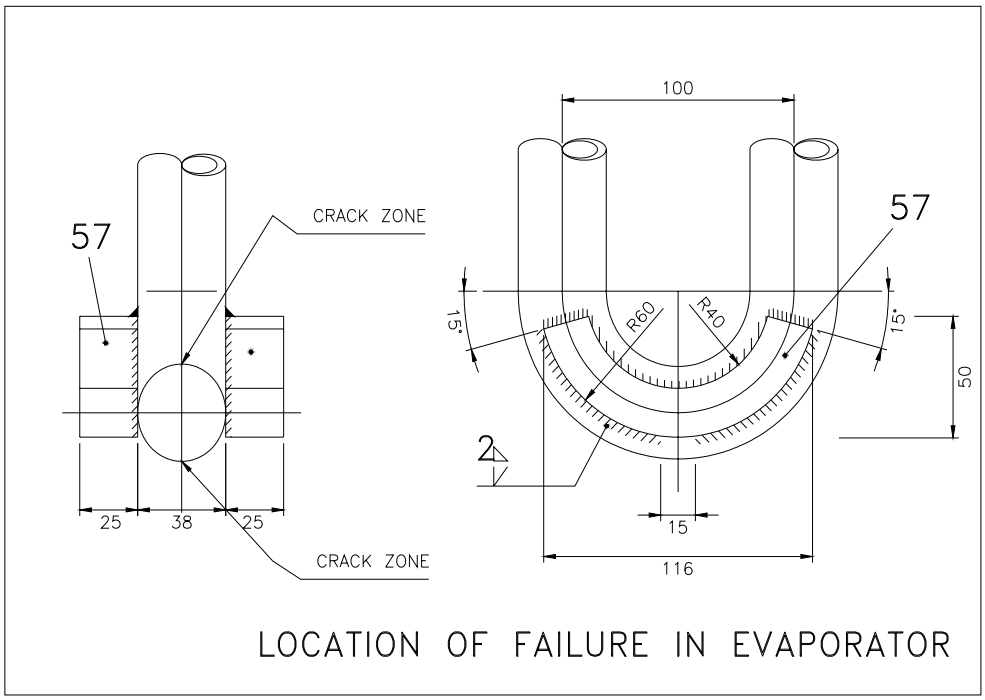
57
CRACK ZONE
25
38
25
CRACK ZONE
100
57
15°
R60
R40
15°
50
2
15
116
LOCATION OF FAILURE IN EVAPORATOR

FIGURE 1

FIGURE 2

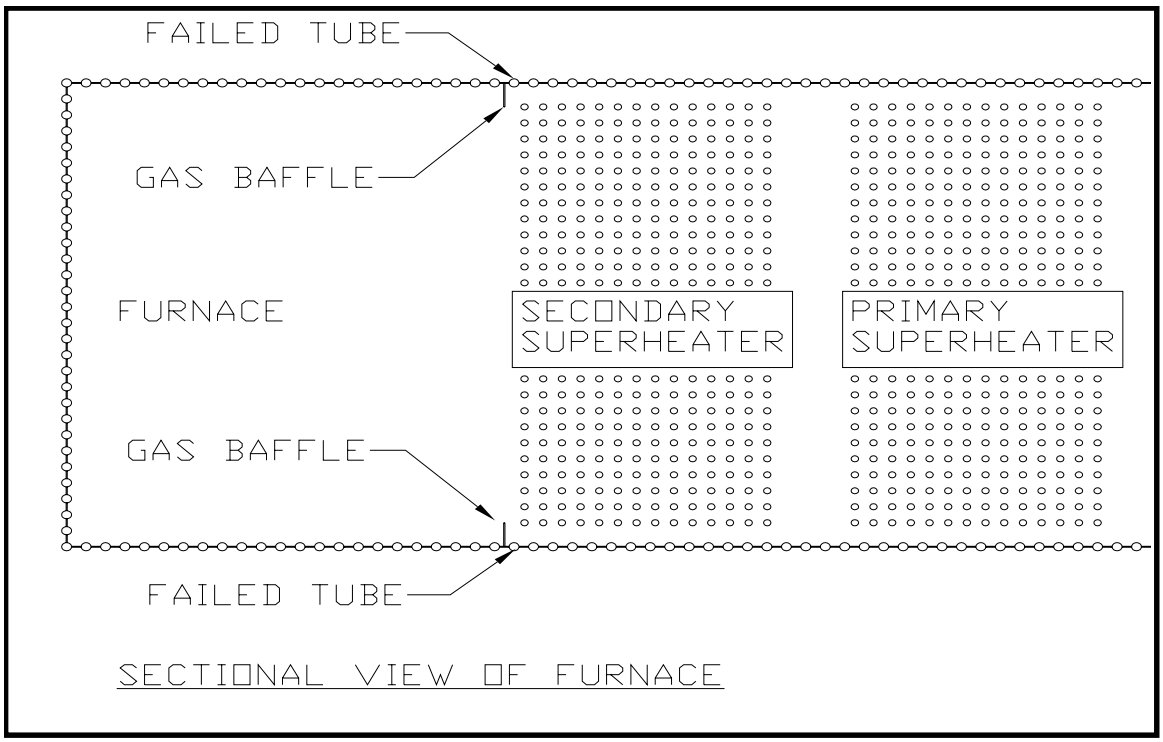


FIGURE 3

FIGURE 4

FIGURE 5

FIGURE 6

FIGURE 7

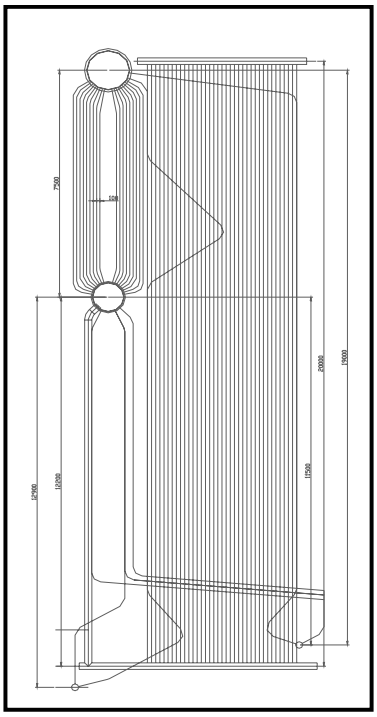

FIGURE 7

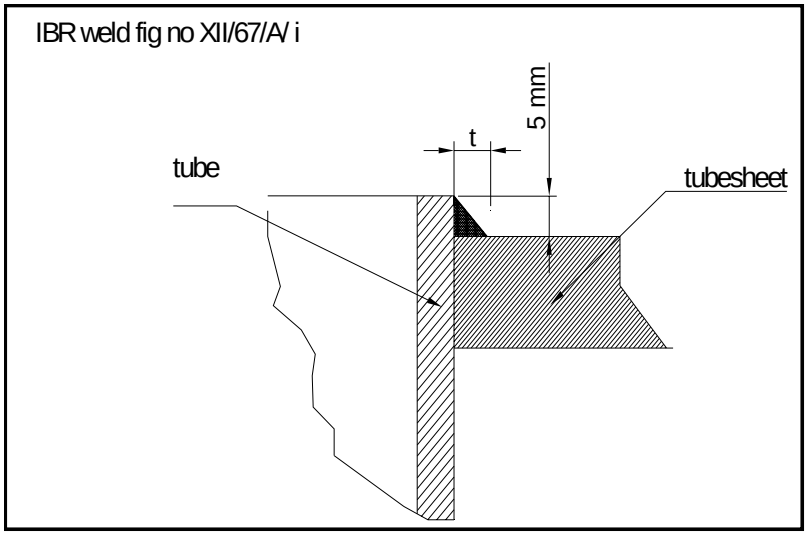


FIGURE 8 Not for high temp zone

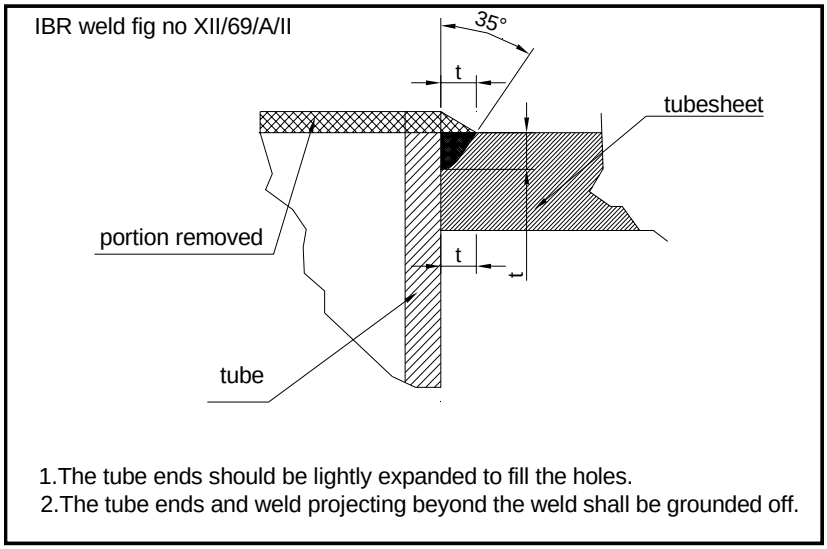


FIGURE 9 Correct weld figure

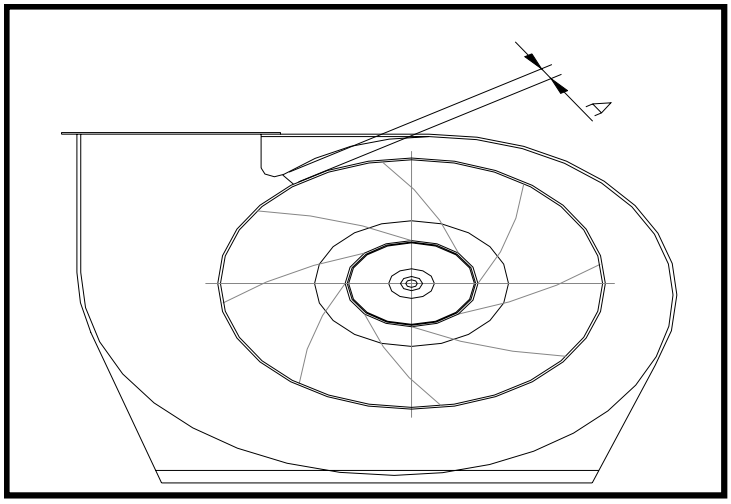

FIGURE 10

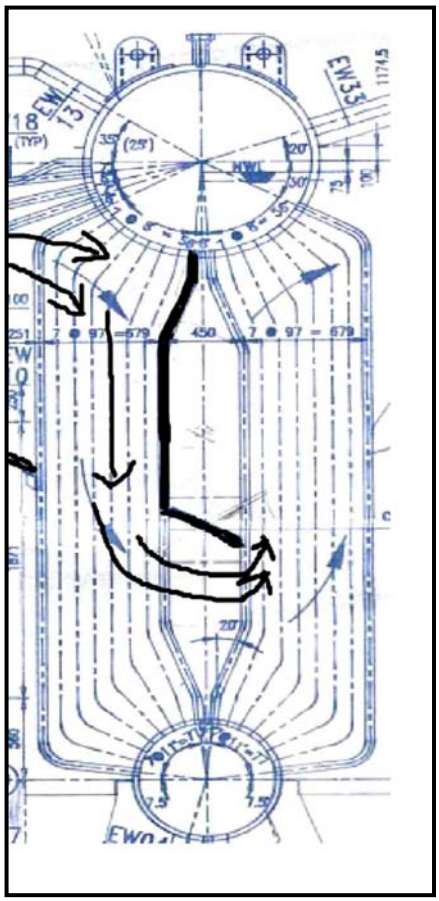

FIGURE 11

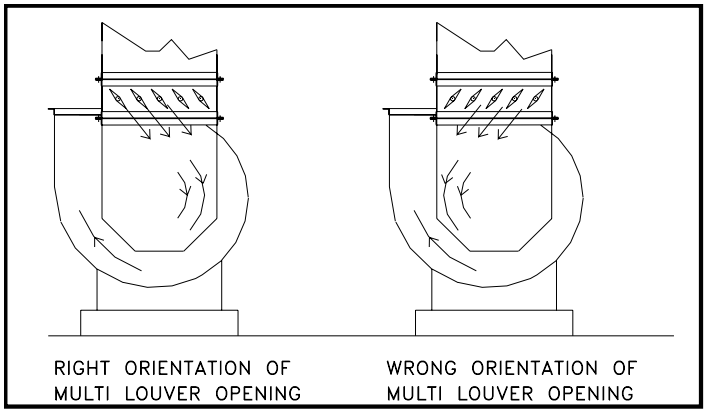


FIGURE 12

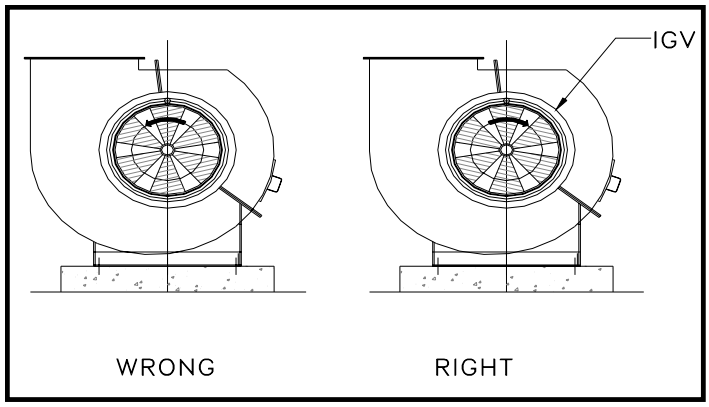


FIGURE 13

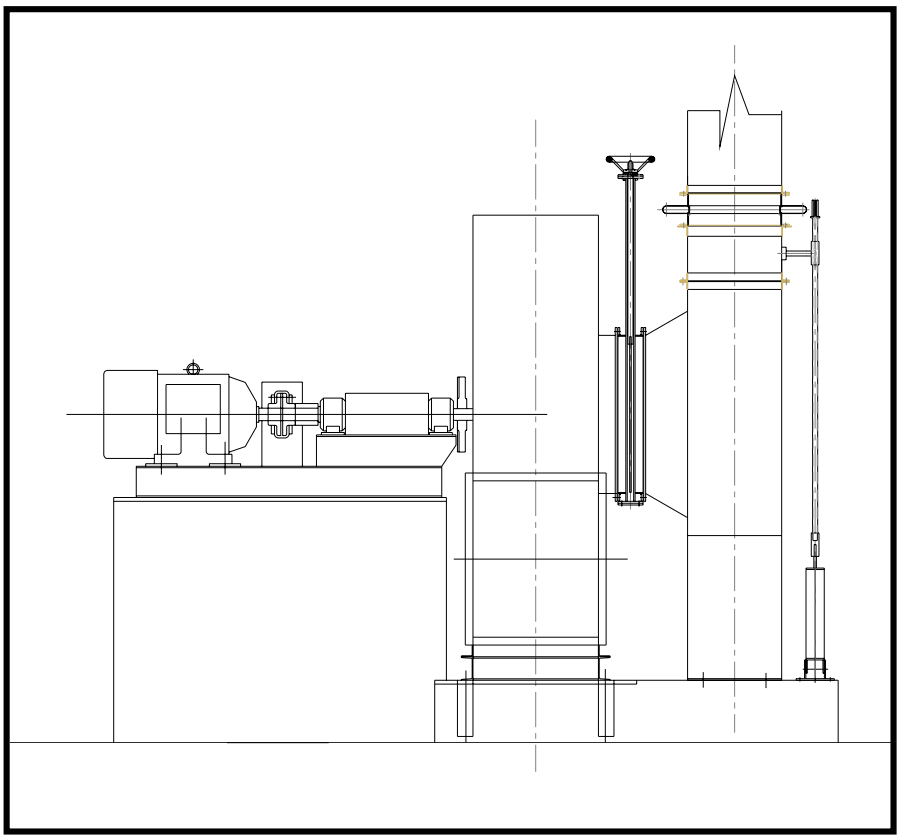

FIGURE 14

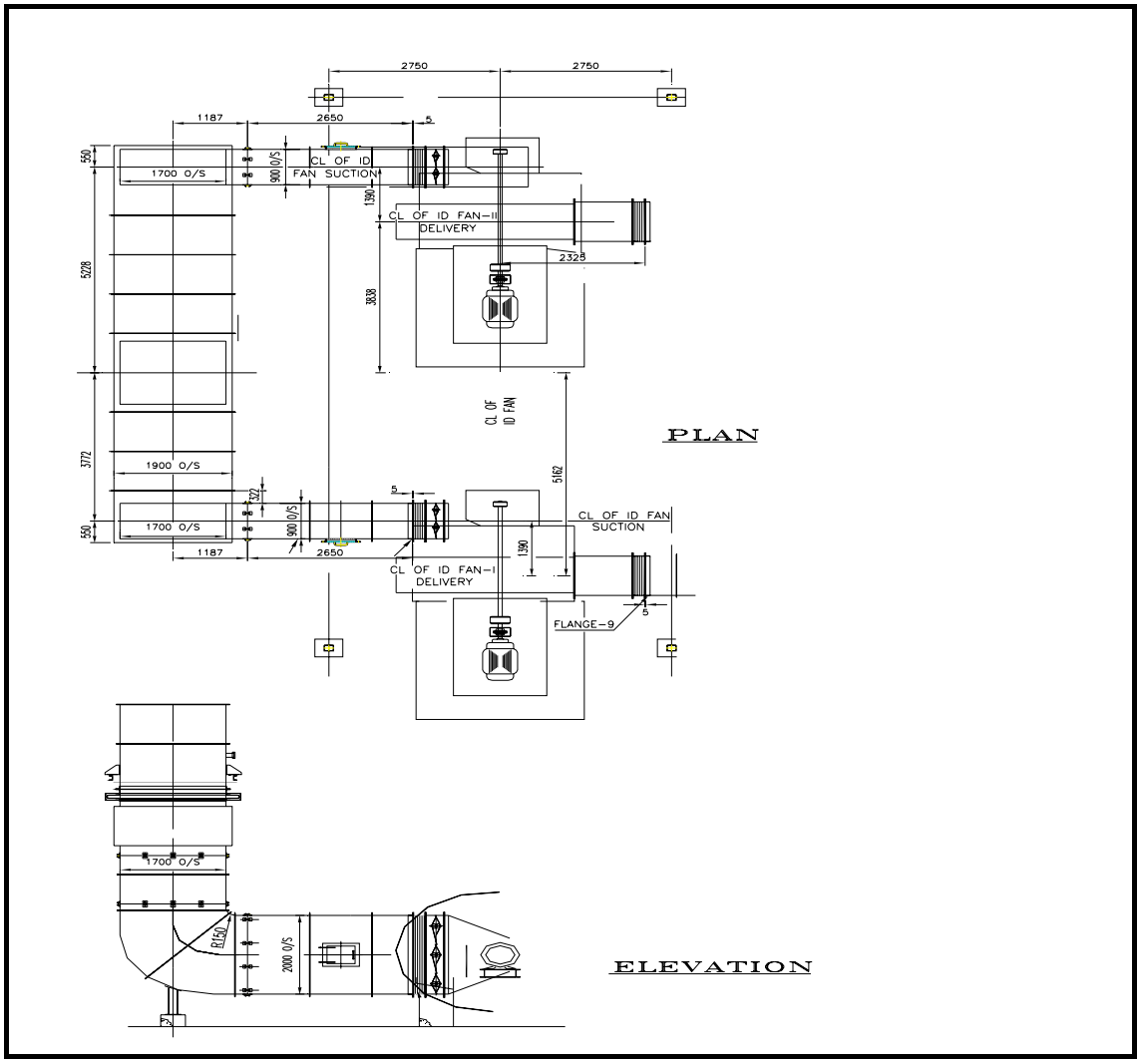


FIGURE 15

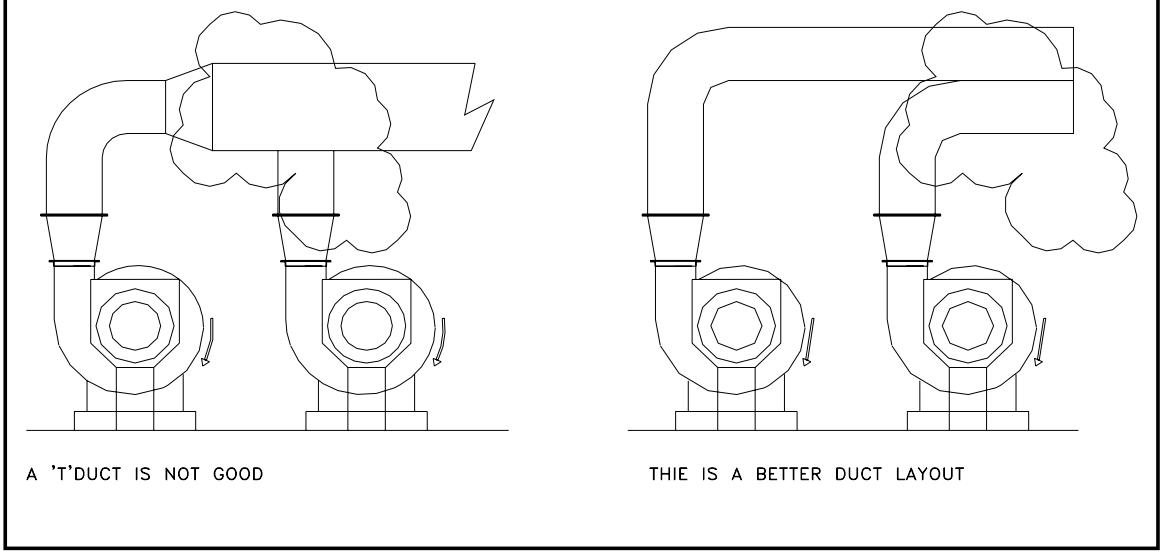


FIGURE 16

# NATURAL CIRCULATION IN BOILERS

## *INTRODUCTION*

This article is focused towards the author's experience in the design and trouble shooting of Boilers related to the principle of natural circulation. Inadequate circulation causes tube failures. Poor circulation in a boiler may be due to design defect or improper boiler operation. In this paper the factors affecting the circulation are summarized. Further case studies are presented.

## *PRINCIPLE OF NATURAL CIRCULATION*

Boilers are designed with Economizer, Evaporator and super heater depending on the Design parameters. Economizers add sensible heat to water. The economizer water outlet temperature will be closer to saturation temperature. The water is forced through the economizer by the boiler feed pumps.

Super heaters add heat to steam. That is the heat is added to steam leaving the Boiler steam drum / Boiler shell. The steam passes through the super heater tubes by virtue of the boiler operating pressure.

Evaporators may be multi tubular shell, Water wall tubes, Boiler bank tubes or Bed coils as in FBC boiler. In evaporators the latent heat is added. The addition of heat is done at boiling temperature. The Flow of water through the evaporator is not by the pump but by the fact called thermo siphon. The density of the water, saturated or sub-cooled is higher as compared the water steam mixture in the heated evaporator tubes. The circulation is absent once the boiler firing is stopped.

## *BOILING MECHANISM*

There are two regimes of boiling mechanisms, namely, the nucleate boiling and the film boiling.
Nucleate boiling is formation and release of steam bubbles at the tube surface, with water still wetting the surface immediately. Since the tube surface temperature is closer to saturation temperature the tube is always safe against failure.

Film boiling is the formation of steam film at the tube surface, in which the metal temperature rises sharply. This leads to instantaneous or long term overheating of tubes & failures. Film boiling begins due to high heat flux or low velocity or inclined tubes.

## *CIRCULATION RATIO/NUMBER*

The flow of water through a circuit should be more than the steam generated in order to protect the tube from overheating. The Boiler tubes, its feeding down comer pipes, relief tubes / pipes are arranged in such a way that a desired flow is obtained to safeguard the tubes. The ratio of the actual mass flow through the circuit to the steam generated is called circulation ratio.

$$\text{CIRCULATION RATIO} = \frac{\text{TOTAL FLOW THRO THE CIRCUIT}}{\text{STEAM GENERATED IN THE CIRCUIT}}$$

Depending the Boiler Design parameters, configuration of the boiler this number would be anywhere between 5 & 60. In low pressure boilers, this number is on the higher side as the density difference between water & steam is high.

***WHAT IF THE CIRCULATION RATION IS LESS THAN THAT REQUIRED MINIMUM?***

Tube deformation / leakage failures / tube to fin weld failures take place. The failure mode varies depending upon the flow, heat input, tube size, boiler configuration, water quality.

- Wrinkles seen in tubes
- Bulging of tubes
- Wrinkle formation & subsequent circular crack
- Heavy water side scaling inside tubes.
- Corrosion of tubes
- Prolonged overheating & irregular cracks on tubes
- Sagging of tubes if orientation is horizontal / inclined
- Tube to fin weld crack

See figure 2 for the illustrations.

***FACTORS WHICH AFFECT CIRCULATION***

- *No of down comers, diameter , thickness, layout*

  No of down comers are selected depending upon the heat duty of each section of evaporator tubes. Depending on the length of the distributing header, more down comers would be necessary to avoid flow unbalance. It is desirable to keep the bends, branches to a minimum so that the pressure drop is less. The selection of down comers is so done to keep the velocity less than 3 M/sec.

- *Heated down comers*

  In some boilers the down comers are subject to heat transfer, for e.g. rear section of boiler bank in Bi drum boilers. The circulation pattern in these boiler evaporator tubes is a function of heat transfer. In case of heated down comers, burning of tubes may take place if the design is defective. There could be stagnation of water in some tubes depending on the heat pick up.

- *Down comer location & entry arrangement inside the drum*

  Depending on the Boiler configuration down comers may be directly connected to steam drum or else to mud drum. One should ensure that the entry of sub-cooled water is smooth into the down comer.

  A down comer directly connected to steam drum is vulnerable to steam bubble entry into the down comer. In such a case the circulation is affected. Instead of using big pipes, more no of smaller diameter pipe would avoid this. Vortex breaker would be necessary to avoid steam entry into the down comer pipe.

  In case a set of bank tubes are used for taking water to mud drum, one should ensure that the steam does not enter these tubes during water level fluctuation. Proper baffle plates would be necessary to avoid mix up of steam water mixture from risers section to down comer section.
  Down comers taken from mud drum are very safe. An obstruction in front of down comer can cause the poor circulation in evaporator tubes.

- *Arrangement of evaporator tubes*

  The circulation in each evaporator tube is dependent on how much it receives heat. If there is non-uniform heating among evaporator tubes, one can expect non-uniform flow. At times even flow reversal can take place. In some situations the water may become stagnated leading to water with high TDS or high pH. Localized corrosion of tubes would occur.

- *Improper operation of boiler*

  Depending upon the boiler capacity there may be number of burners / compartments in a boiler. This is required in order to achieve the boiler turn down in an efficient way.

  In FBC boilers no of compartments are provided for turn down. Operating only certain compartments all the time would cause stagnation of water in unheated section of bed coils. The concentration dissolved solids; pH could be far different from the bulk water chemistry. This leads to corrosion of boiler tubes.

  Similarly, operating same burner would heat the evaporator tubes in non-uniform way leading to different water chemistry in unheated section of furnace tubes.

- *Feed pump operation*

  In low-pressure boilers, (pressures below 21 kg/cm2 g), the feed pump on /off operation is usually linked to level switches in the steam drum. When the pump is in off mode, it is likely that the steam bubbles would enter the down comer tubes and cause loss of circulation.

- *Arrangement of evaporative sections and the interconnection between sections*

  In certain configuration of boilers it is possible to obtain better circulation by interconnecting a well-heated evaporator sections to poorly heated evaporator section. It would be necessary to separate the poorly heated section if it lies in parallel to well heated section. The down comers & risers are to be arranged separately so that the reliable circulation can be ensured. This principle is called sectionalizing for reliable circulation. The inlet headers / outlet headers shall be partitioned for this purpose.

  However, it is desirable to arrange the evaporative surface in such a way that heat flux & heat duties in various circuits are more or less same.

  If tubes are inclined close to horizontal, the steam separation would take place leading to overheating of tubes.

- *No of risers , pipe Inside diameter, bends, branches*

  No of risers are so selected that the velocity inside the pipes would be 5 – 6 m/s. The no of risers are selected in such a way the flow unbalance is minimum. It is preferable to adopt long radius bends to keep the pressure drop to minimum. The no off bends, branches should be kept as minimum possible as these elements contribute for high-pressure drop.

- *Arrangement of risers in the drum*

  The risers are arranged in such a way that the pressure drop is minimum. The baffles are spaced apart to keep the obstruction to flow is minimum. Instead of terminating the risers below

the water level in the drum, it would be better to terminate above water level in the steam drum as it allows free entry.

- *Feed distributor inside the steam drum*

  Feed distributor shall be arranged in such way that the sub-cooled water enters the down comer section. This will ensure that the good hydrostatic head is available for circulation.

- *Drum Internals arrangement*

  Drum internals such as baffles, cyclone separator also form part of the natural circulation circuit.

  The baffles are arranged in such a way the steam would rise easily to the steam space without much resistance. High-pressure drop in the drum internals will retard the flow through evaporator tubes.

- *Slagging of furnace tubes*

  The design of the furnace shall be in such a way that the Slagging of the fuel ash is avoided. Slagging retards the heat transfer to tubes and thus the driving force for circulation will come down. At locations where the tubes are clean, this would lead to overheating of tubes. If unavoidable, soot blowers shall be so arranged that the uniform heat flux to evaporative sections be not hindered.

- *Critical heat flux, Allowable steam quality, recommended fluid velocity*

  In the design of furnace, the heat flux should not be higher that a limit beyond which the tube will burn. Several correlations are available on this.

  In a circuit the steam produced divided by the mass flow would be the quality of steam produced in the circuit. The allowable steam quality has been found be dependent on the heat flux, mass velocity and the steam pressure.

  Even after ensuring that the heat flux and steam quality are safe, the entry velocity is important to avoid departure from nucleate boiling. For vertical rising circuit the velocity is in the range of 0.3 m/s to 1.5 m/s. for inclined circuit the velocity shall be in the range of 1.54 m/s to 3 m/s.

## *ANALYZING FOR BOILER WATER CIRCULATION*

In a circuit, the circulation takes place due to difference in density between the cold water in the downcomer circuit and the density of steam water mixture in the evaporator tube. The flow will increase as the heat input is more and the density of water steam mixture decreases in the evaporative circuit. But pressure loss in a circuit rises as the flow increases. Hence there will be appointing of balancing at which time the pressure loss is equal to the head. In order to improve / retard the flow, the circuit may be rearranged duly considering the above discussed factors.
Using MSEXCEL, practically any circuit can be analyzed for the circulation.

## *CONCLUSION*

The design of the boiler is not necessarily such a mere calculation of Heat transfer surfaces. It is much beyond that. One such subject of importance is undoubtedly the circulation.

***CASE: 01***

The bottom rows of the bank tubes of this cross tube boiler were sagging.

There were no drum internals. Feed distributor was added to improve the circulation. Further in order to have saturated water into the down comer baffles were added in the steam drum to promote circulation.

The blow down stub was very close to the bottom row of tubes. Continuous blow down was recommended so that loss of circulation could be averted. Refer to the figure 3.

***CASE: 02***

In this case, the water wall & bed coils were failing after bulging & overheating. Thick rough edge cracks were observed wherever the failure took place. There were several locations at which the failures had taken place.

There was severe scaling in the boiler. Hence the water quality was suspected for a long time.
By removing the flue tube immediate to the down comer, the failure stopped.

Similar failures were noted when there was lot of accumulation inside the headers due to improper post cleaning operation after a chemical cleaning of the boiler. Refer to the figure 4.

***CASE: 03***

This boiler was converted for fluidized bed firing. There were wrinkle formations in bed coil tubes. It was felt that the down comer & risers were inadequate and several modifications were done in order to reduce the pressure drop in the circuit. Still the failures continued. Suspecting boiler expansion problem, the refractory work was reconstructed with adequate provision for expansion. Yet the failures continued.

The two drums were provided with feed nozzles at dished ends with separate non return valves. It was noticed that the feed water was not going into one of the drums, as the NRV was defective. It is possible that flow reversal was taking place in the down comer in the drum where the NRV was not functioning.

The NRV at each steam drum inlet was removed and a common NRV was provided in the feed line. Also a feed distributor was added in each drum to distribute the water to down comer area. This way the flow reversal in the down comer was eliminated and the failures stopped. Refer to the figure 5.

***CASE: 04***

The boiler was provided with heated down comers. There were no baffles inside the drum to separate the steam water mixture from down comer section. When the load in the boiler increased beyond a point the down comers started bursting.

This proved the possibility of steam water mixture entering the down comers. Boiler drum internals with cyclone separators were added. Refer to the figure 6.

***CASE: 05***

The illustration shows a boiler converted for FBC firing. In this boiler vibration of riser tubes was experienced. Even after a snubber support was provided, the vibration continued. The circulation calculation showed a velocity of 7 m/s in riser tubes. The vibration problem vanished after one of the risers was removed. The velocity in the riser was then estimated to be less than 6 m/s. Refer to the figure 7.

***CASE: 06***

The above is a Fluidized bed combustion boiler with three compartments. A pin hole failure was reported in the 12 o clock position of the bed coil tube. On cutting the tubes, the inside was found have gouging mark for the throughout the inclined portion of the tube. Several adjacent tubes are inspected with D meter. Four adjacent tubes showed less thickness at 12o-clock position. The tubes were cut inspected and these tubes were also found to have the same marks as the leaked tube.
On suspicion the symmetrical tubes about the boiler axis ware also checked with D meter. The tubes were found to have similar gouging attack.

The boiler water log sheets since commissioning were analyzed and found the water chemistry had deviated in the past three months. The boiler was operated on pH of 11, resulting in free hydroxide. The water inside the idle compartment was stagnant, as the compartment was kept idle. Caustic attack had been the cause of failure.

Customer was advised for alternate activation of compartments so that the circulation in all tubes would be good.

The above case is clearly a circulation-related failure due to operational defects.
Refer to the figure 8.

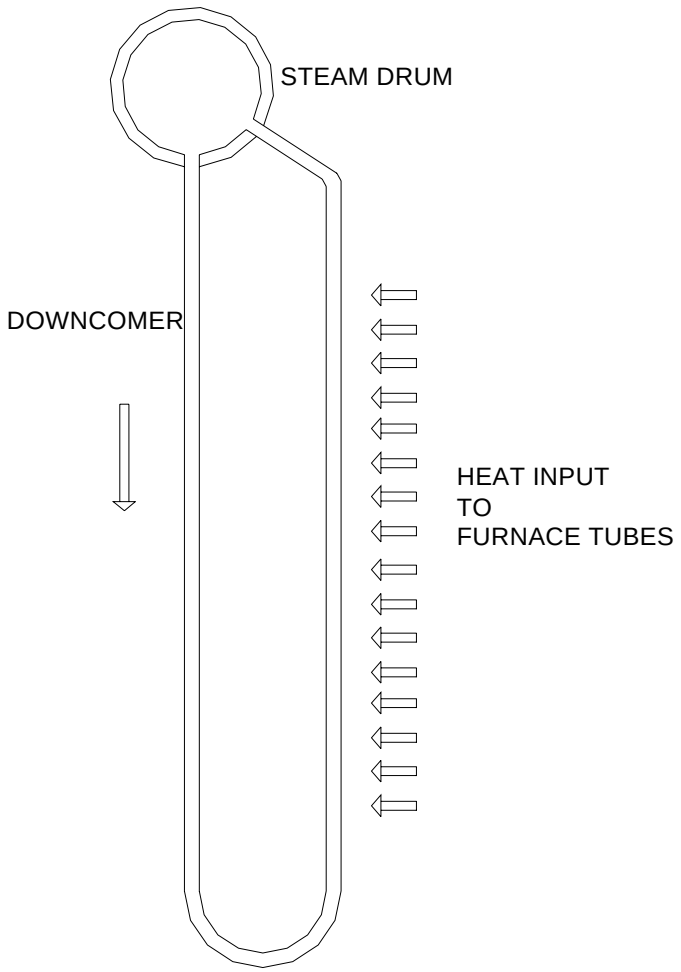


FIG 1. FLOW DUE TO DENSITY DIFFERENCE

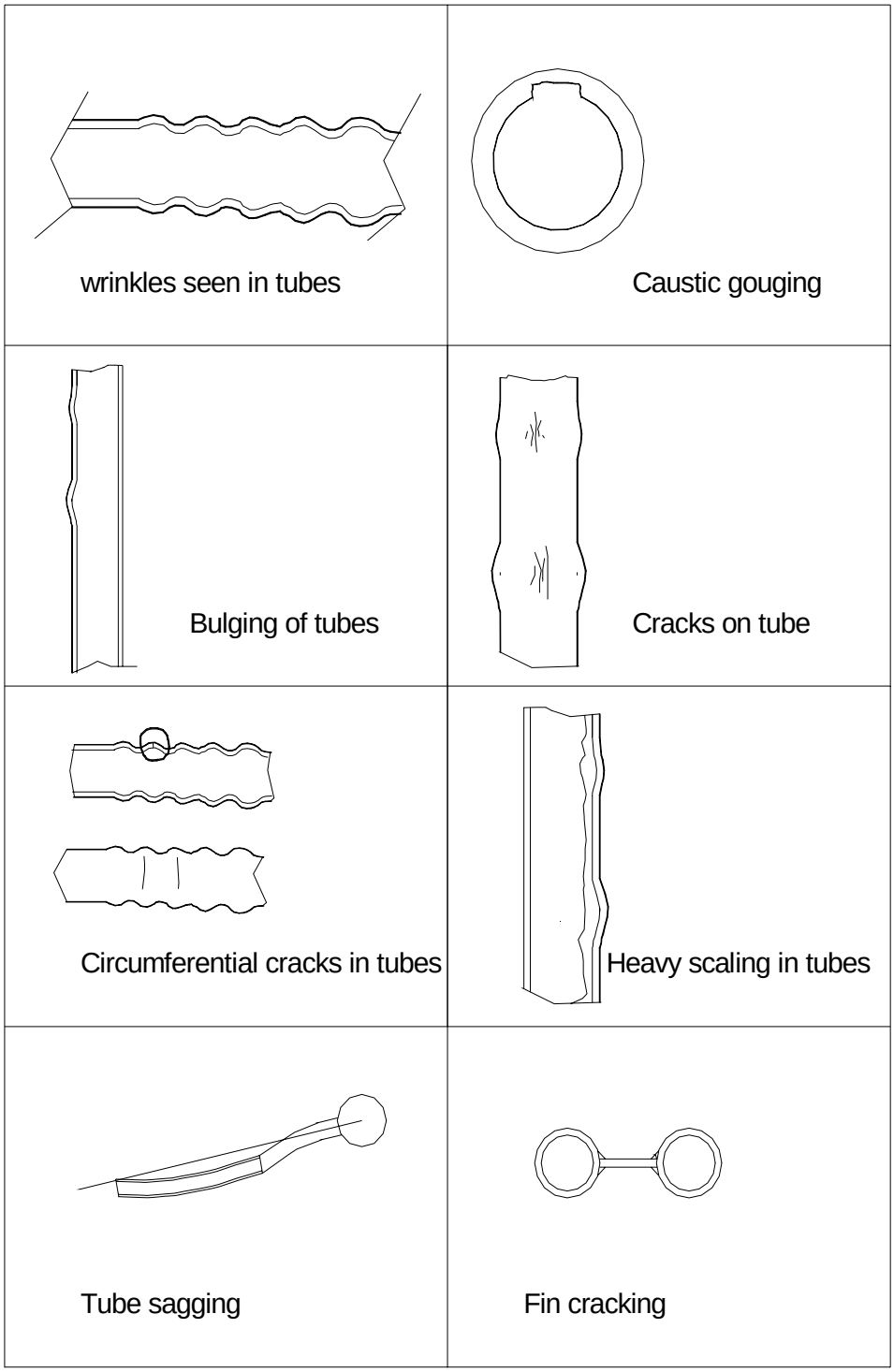


FIGURE 2. ILLUSTRATION SHOWING TUBE FAILURES

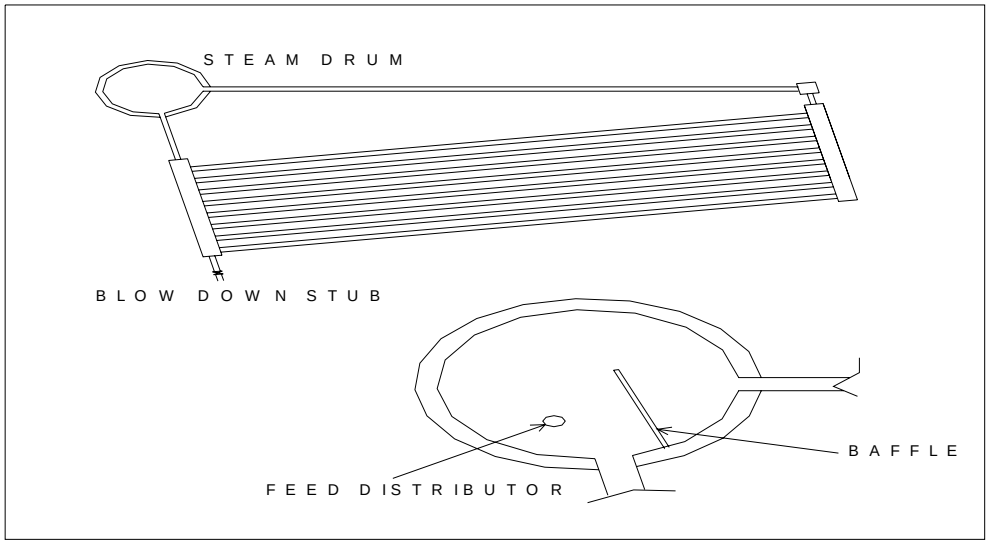


FIGURE 3

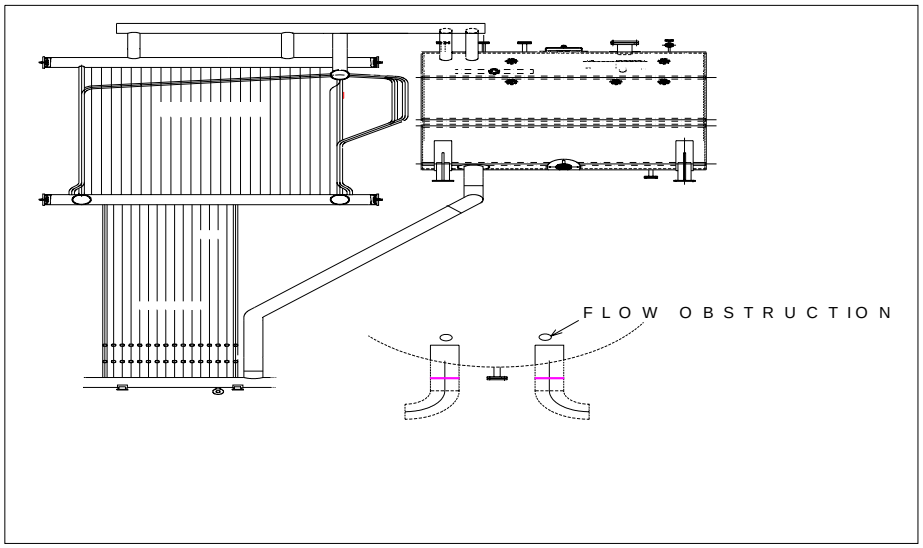


FIGURE 4

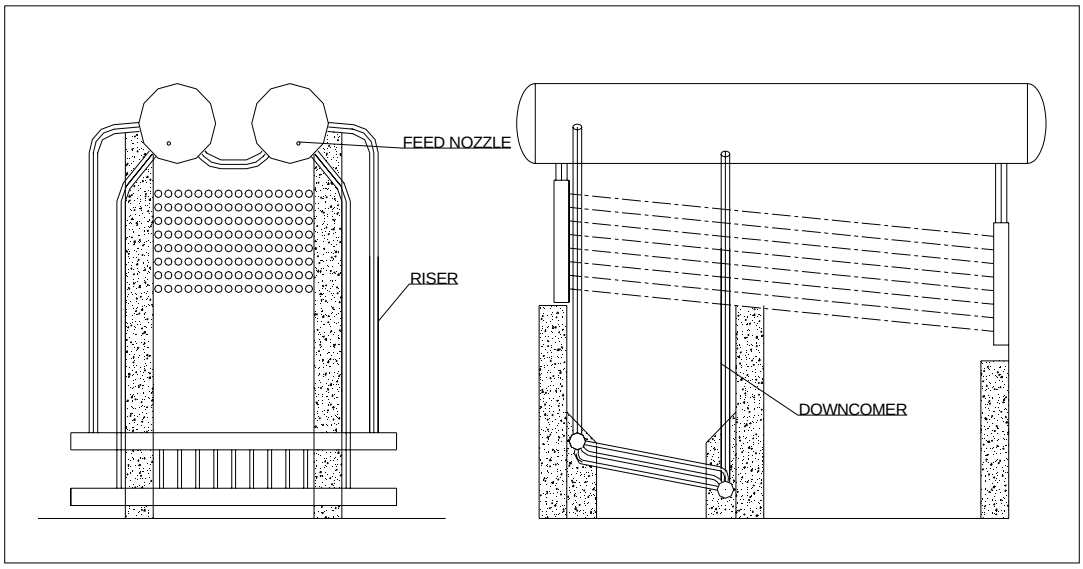


FIGURE 5

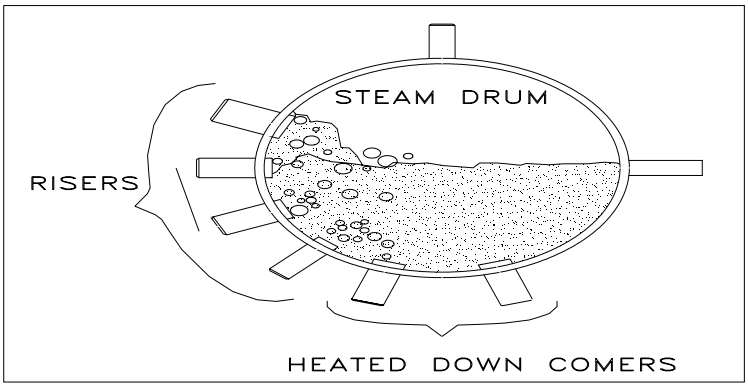


FIGURE 6

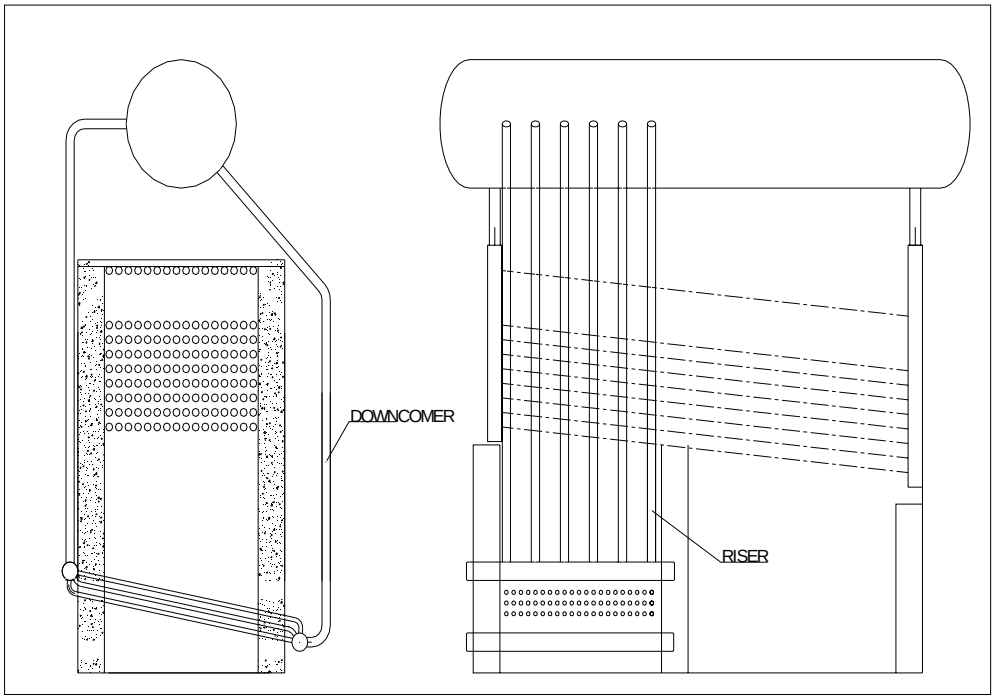


FIGURE 7

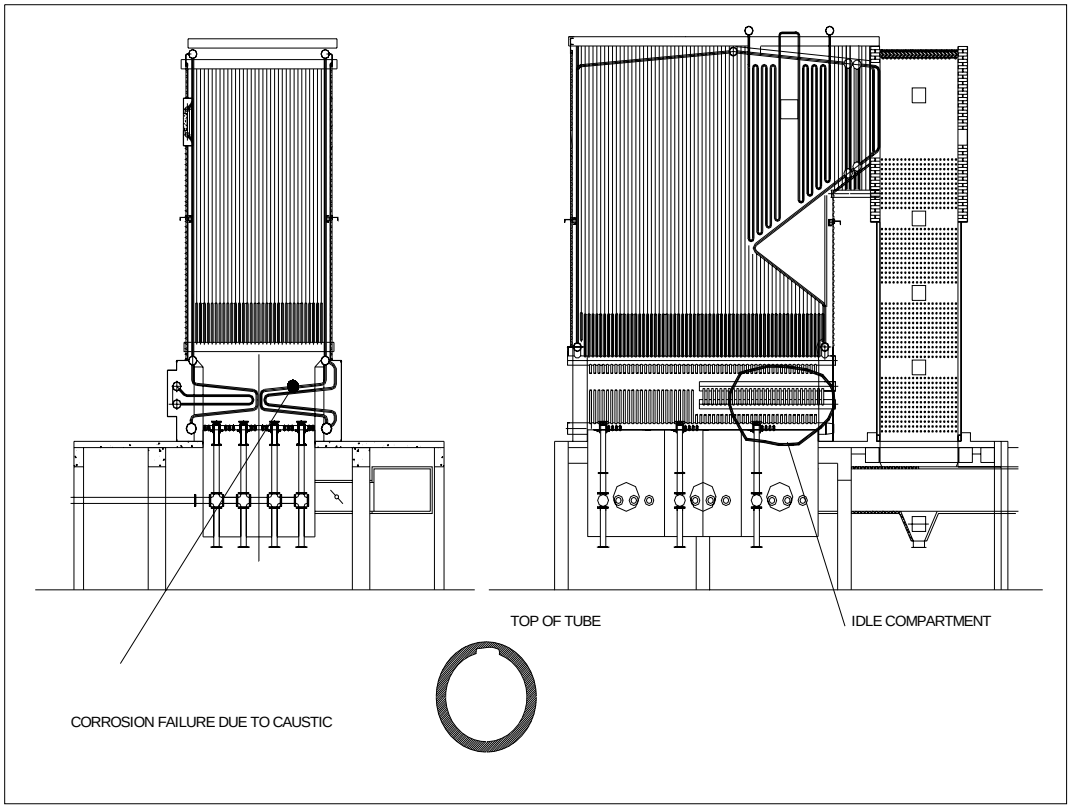


FIGURE 8

# PRESERVATION OF BOILERS

## *INTRODUCTION*

The boiler life is more while in service than when it is idle. There are boilers, which are operated for 8-9 months in a year. There are boilers, which act as standby. While in service, waterside parameters are being monitored by most of the boiler users. When the boiler is running, the gas side surfaces are dry, except at the low temperature zones where flue gas condensation is experienced. However, the boiler when idle is not taken care of by the users. This article is aimed at educating both shell type boiler users and water tube boiler users in the area of preservation.

## *WATERSIDE CORROSION*

Water, left inside the boiler without properly treating for oxygen removal, can lead to corrosion. The attacks on metals take place due to improper pH level too. The corrosion results in isolated pits or craters where in the parent material thickness is reduced. This leads to generation of loose oxides, which again lead to further deposit related failures. Tube failures can occur at craters where thickness is less.

## *GAS-SIDE CORROSION*

More corrosion can take place on the gas-side of an idle boiler than when the boiler is in operation. Gas side corrosion results from attack on the metal of the boiler by sulphur compounds. These accumulate in soot deposits, which can contain up to 30% sulphuric acid, which is hygroscopic, i.e. absorbs moisture from the atmosphere. The soot becomes wet, and allows the acid formation and leads to attack on boiler steel. Corrosion under ash deposits does take place depending of the sulphur and the fuel moisture.

## *PRESERVATION METHODS*

One of the following methods is used for preservation of boilers.

1. Dry preservation
2. Wet preservation under hydraulic pressure
3. Wet preservation with nitrogen capping

Obviously the gas side has to be put in to dry preservation only. Waterside can be put in to preservation under any of the three methods.

## *GAS SIDE PRESERVATION OF WATER TUBE / FLUE TUBE BOILERS*

When boilers are laid- off it is important that the gas-side is thoroughly cleaned and all soot / ash deposits are removed. This is much more easily done with the boiler hot. The soot is then much drier and more readily removed.

Having cleaned the boiler it is advisable to dust all the heating surfaces with hydrated magnesia to neutralize any acid that is remaining. This can be done by blowing the powder through the flues by means of small vacuum cleaner arranged to blow.

Where boilers are connected to separate chimneys it is best to leave the gas side fully ventilated, i.e. open up the burner, or remove it, and leave the exit damper, if any, fully open.

Where boiler outlets are connected to common chimney this cannot be done otherwise flue gases may discharge back into the boiler house through the idle boiler. In these cases the exit damper must be shut and the dusting with magnesia carried out all the more thoroughly.

Flue tube boilers are easily amenable for gas side cleaning. Opening the II pass can do this / III pass doors.

In the case of water tube boilers, the manholes provided for Super heater, Economizer, Air heater, MDC, ESP sections are to be opened to clean the ash / soot deposits thoroughly. Due to varying climatic conditions, and due to insulation, the inside of the boiler is never warmer. However it can be made warmer, by adding high watts lamps. Room heaters or hot air generators can also be used as source of hot air supply.

In addition, silica gel or slaked lime – Ca (OH) 2 can be kept inside the boiler in trays. At periodical intervals the silica gel / Slaked lime must be inspected and replaced.

***WATER SIDE PRESERVATION OF SHELL TYPE BOILERS***

1. *HEADERING WITH OPERATING BOILERS.*

   It may be practical to leave the boiler under steam supply from other boiler. In such a case, the water quality must be monitored for residual sulphite level and pH. The pH must be maintained at 10 and at least 150 ppm of sodium sulphite should be maintained. For this purpose the boiler must have separate chemical dosing arrangement.

2. *WET PRESERVATION UNDER HYDRAULIC PRESSURE*

   In this case, the boiler is always kept under hydraulic pressure of 5-kg/cm2 pressures. Water quality must be monitored for residual sulphite level and pH. The pH must be maintained at 10 and at least 150 ppm of sodium sulphite should be maintained. This method can be adopted for an idle period of up to three months.

3. *DRY PRESERVATION*

   Drain and dry boiler with hot air, place a small electric heater in the bottom of the boiler & leave shell man doors open to allow good ventilation. High wattage lamps may also serve the purpose. The dry preservation method will be the best and easiest method for the shell type boiler.

***WATER SIDE PRESERVATION OF WATER TUBE BOILERS***

1. *DRY PRESERVATION*

   The dry preservation method is effective provided the boiler is completely drainable. If Super heater / Economizer sections are completely drainable then this method can be practicable.

   - The headers should have removable hand hole plates wherein silica gel or hydrated lime can be kept inside for absorbing moisture.
   - Heaters can be placed inside the headers. The warm climate will ensure the metal surfaces are dry. Similarly the drum / drums should be kept dry by means of room heaters.
   - Volatile corrosion inhibitors can also be used to contain corrosion in idle boilers.

If the boiler has non-drainable super heater sections, getting rid of water will be difficult. Hence this method cannot be adopted for such boilers.

2. *WET PRESERVATION*

In this method the boiler should be filled with De-mineralized water with a pH of 10 and hydrazine / sodium sulphite dosed to 200 ppm. It is a fact that the steel corrodes at the least rate, when pH of 10. The boiler filling must be proper. It is necessary to back fill the boiler from Super heater section and ensure the water overflows from Super heater to the steam drum. The water should be filled from the lowest point to ensure the air is properly released from the boiler. After this, any one of the following should be implemented.

- Maintain 5 kg/cm2g pressure in the boiler by means of a hand pump. Every day the pressure should be monitored.
- Instead of pressurizing, the space above the water surface can be sealed by Nitrogen gas, which is inert. This is known as Nitrogen blanketing. The recommended scheme is shown below. The nitrogen is maintained at pressure of 0.35-kg/cm2 g to avoid air ingress. In this case the Super heater section will not be filled with water.
- Periodical testing of water has to be done to ensure the water pH is maintained at 10 and the hydrazine / sodium sulphite levels are maintained at 200 ppm. A pump arranged for re-circulation will be necessary for higher capacity boilers, where the water hold up volume is more.

***CONCLUSION***

In Sugar mills, the boilers are forced to go offline during the off-season period. Replacement of boiler tubes is more common in this industry. By taking proper care during off-season, the boiler life can be improved.

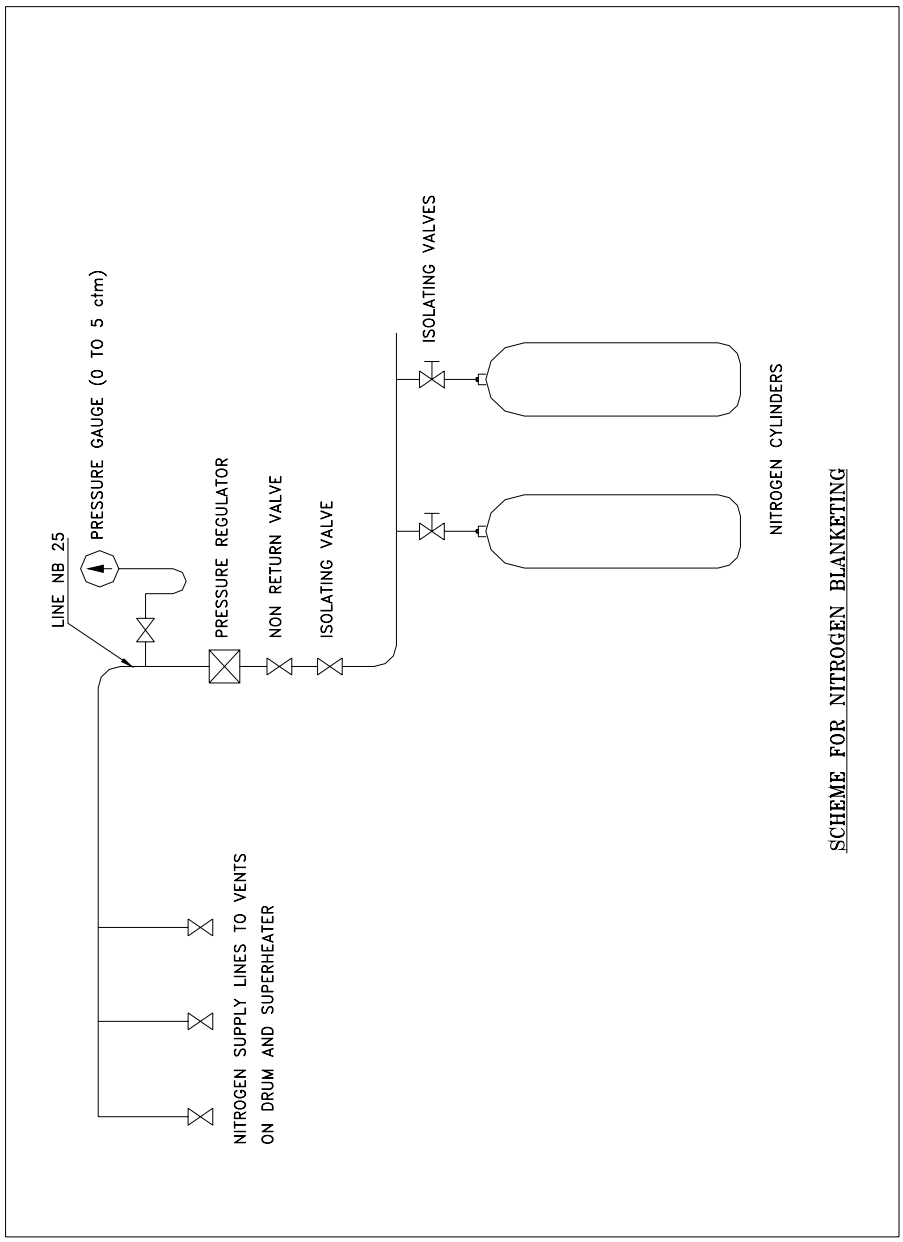
LINE NB 25
PRESSURE GAUGE (0 TO 5 ctm)
PRESSURE REGULATOR
NON RETURN VALVE
ISOLATING VALVE
ISOLATING VALVES
NITROGEN CYLINDERS
NITROGEN SUPPLY LINES TO VENTS
ON DRUM AND SUPERHEATER
SCHEME FOR NITROGEN BLANKETING

FIGURE 1

# A CASE OF BOILER FAILURE DUE TO OVERSIZING OF BOILER FEED PUMP

## *THE FIRST VISIT*

It was unbelievable that all the bank tubes were leaking at the joints within a month after the boiler was fired. The owner of the sugar mill requested me to make a visit and inspect the boiler to find out whether there was any thing wrong. The boiler was under shut and it was open when I visited. The boiler vendor had sent his people for re-expansion of all tubes. I checked with the operator whether there was low water level operation even for a short duration. He denied any such occurrence. I checked for any possibility for an overall circulation failure due to improper drum internal arrangement. The no of cyclone separators was adequate as per my calculation. As there was no drum level recorder, I could not ascertain the cause. The boiler engineers did not feel it was a serious issue. The boiler was planned for restart the next day. I returned the next day to see the boiler in operation as the owner requested me to come again.

## *THE DETAILS ABOUT THE BOILER*

The boiler parameters were 35 TPH, 44-kg/cm2 g, 440 deg C. The boiler was fitted with pulsating grate to fire the bagasse from the sugar mill. The boiler was a bi drum type top supported design. The furnace was enclosed with loose tubes backed up by refractory tiles, insulation mattress and a leak proof casing attached to the buckstays. The boiler was provided with a three-element drum level control system. The Control panel had circular chart recorders for feed water flow, steam flow and CO2 in flue gas. The boiler configuration is shown in figure 1.

## *WHAT I SAW NEXT DAY!*

The boiler was on full fire when I came back the next day. I directly went up to see the water level. My first doubt was that the set point for NWL might be lower than what is required. But it was OK. I just watched for 5 minutes. There was a water level swing of nearly 120-mm but water level was within the gauge glass. The person stationed for drum level monitoring explained that the water level fluctuated but never it went down below the gage glass.

While coming down the platform, I observed the feed control station. The feed water flow control valve was hunting. The control valve remained closed for about 2 minutes. At times the valve went for full opening.

I came near the feed pumps at ground floor. The pump discharge pressure showed 80 kg/cm2g and I found the discharge valve was almost shut. For a boiler with main steam pressure of 44 kg/cm2g, this was too high. The hand operated minimum flow valve to Deaerator was fully open. By then, I learnt that Boiler vendor’s commissioning engineer had set the valves as such positions.

I went inside the boiler control room. There was no drum level recorder. Instead recorders were available only for feed water flow, steam flow & CO2. I could not confirm that the water level had never gone down below the LWL. There was no tripping arrangement in the boiler on low water level. The steam flow chart did not show much of short time fluctuations. The steam load on the boiler was about 25 TPH since the old boilers were also in operation. The feed flow chart indicated that the closure of the feed control valve very often. I reviewed all the daily charts on water level. Almost all the charts since the boiler was commissioned indicated the feed water flow fluctuation.
I had a look at the boiler pressure part arrangement. There were no positive downcomers to ensure the positive circulation of water to the lower drum when the water flow would be cut off. I discussed with the Plant in charge. I explained that the boiler feed pump is oversized. The feed control valve design

pressure drop seemed small and hence the feed control valve was working as on / off valve instead of regulating the feed flow.

I explained that the heat pick up in the boiler was expected to be more as there was economiser and airheater down the flue gas path. Due to this, the rear set of bank tubes which are to act as downcomers suffer reverse flow. When cold water is not added to the drum, the water level appears swollen. Since the drum level remains increased for more time until the water hold up in the evaporator comes down due to continued steam drawal. I explained the possibility of excess steaming of bank tubes due to reduced circulation. The Plant in charge confirmed that some tubes were found distorted inside the boiler bank. Then I recommended that the feed pump motor is provided with the Variable frequency drive. Alternately the control valve should be changed to suit the available excess head at the discharge of the pump. We discussed the possibility of killing the excess pressure drop by means of series of orifice plates. I gave a sketch and left the plant.

***THREE MONTHS LATER***

The Plant in Charge called up over phone to inform me that the whole boiler tubes were found to be distorted. The crushing season was over and the boiler was in open for cleaning. No measures were taken during the season to attend the water flow fluctuation.

The steam generating tubes in the furnace were found completely distorted. There was mild swelling of tubes in several places. Since the tubes were tied together at the level of buckstays, in all other locations the tubes were found elongated and distorted. It was clear that the inside the tubes nucleate boiling would have been disrupted. Steam blanketing must have occurred leading to overheating of tubes and abnormal thermal expansion of the tubes. It was observed that the furnace refractory walls caved inside because of the thrust from the downward expansion of the tubes. It was clear that the feed water flow and drum level fluctuation must have caused the reduced flow in the steam generating tubes. During the season the boiler had run at near full load. Hence the firing rate was more. Since the furnace tubes pick up more heat at increased firing rate, the tubes had to distort. Yet I had to check the circulation calculations for the heated downcomers (rear set of bank tubes). The circulation calculations confirmed that adequate velocity in the steam generating tubes.

This time again the feed water recorder charts showed quite lot of hunting. I explained to client that the loss of available head for circulation must have lead to poor circulation rate and thus the DNB (Departure from nucleate boiling) must have occurred.

The plant in charge decided to replace all the furnace tubes and to go in for my recommendations for VFD for boiler feed pump. The cause for the entire episode was definitely the oversizing of feed pump. The plant in charge explained that in sugar mills it is a practice to go in for 130 % margin on normal head and 130 % margin on flow. It was obvious that the feed pump was oversized leading to high discharge pressures at normal flow rate. The feed control valve had to operate like open / close valve because of oversizing of the boiler feed pump.

***4 MONTHS LATER***

I visited the plant to check how the VFD was working in the system. The feed control valve was disconnected from the control loop. It was kept full open. The Feed pump rpm was now controlled through VFD by the Drum level control loop. The feed flow chart indicated that the feed flow is now steady. Further as advised by me the CO2 recorder available in the panel was now connected for indicating the drum level. Drum level chart indicated no fluctuation in level.

## *CONCLUSIONS*

The feed pump selection should be proper and more care is to be taken for the control valve selection. Oversizing of the pump has led to a unusual failure. A worksheet showing the method for selection of boiler feed pump is presented in this article.

It is appropriate to narrate a similar failure pattern in boilers offered by a leading Indian Boiler Manufacturer. The figure 2 shows the boiler configuration adopted by the manufacturer. The boiler is offered with FBC furnace for firing many fuels. The boiler is designed to produce saturated steam at low pressures (max 17.5 kg/cm2g). The boiler is designed for switching on / off based on low & high-pressure switches. Also the feedpump is designed switching on / off based on Mobrey level controller. The bank tubes are often found distorted / sagged. Many users retube the boiler and yet experience the same failure. Only distortions occur but not tube failure. As such in this boiler, the head available for circulation is very less. If the pump is oversized or if the boiler steam drawal is less, the boiler feed pump is likely to be off for more period. This will disturb the circulation rate through the bank tubes. The firing rate being always constant in this boiler, the available head reduces when the pump is in the off mode. My request to these users is to operate the pump on continuous basis.

## SAFETY VALVE SET PRESSURE & RELIEVING CAP.CALCULATIONS

**PROJECT :** **M/S ABC Limited**

**INPUTS**

| | | |
|---|---|---|
| Steam generation rate Nett = | 35000 | kg/h |
| Saturated steam flow for deaerator = | 400 | kg/h |
| Main steam pressure = | 44 | kg/cm2 g |
| Calculated Pressure drop across SH & DESH = | 3.5 | |
| Calculated Economiser pressure drop = | 1.5 | kg/cm2 g |
| Control valve pressure drop assumed = | 2 | kg/cm2 g |
| Calculated Feed line pressure drop = | 1 | kg/cm2 g |
| Margin on BFP flow = | 15 | % |

## SAFETY VALVE RELIEVING CAPACITY CALCULATIONS

| | |
|---|---|
| Maximum steam generation capacity of boiler | = 35000 kg/h |
| Peak generation capacity | = 1.1 x 35000 kg/h |
| | = 38500 kg/h |
| MSSV relieving capacity | = 0.4 x 38500 = 15400 kg/h |
| Saturated steam flow for deaerator | = 400 kg/h |
| Drum SV 1 relieving capacity | =( 0.3 x 38500) +( 0.5 x 400) = 11750 k |
| Drum SV 2 relieving capacity | =( 0.3 x 38500) +( 0.5 x 400) = 11750 k |

## SAFETY VALVE SET PRESSURE & FEED PUMP DISCHARGE PRESSURE

| | |
|---|---|
| Main steam pressure | = 44 kg/cm2 g |
| MSSV set pressure | = 44 / 0.95 kg/cm2 g |
| | = 46.316 kg/cm2 g |
| MSSV set pressure | = say, 46.5 kg/cm2 g |
| Calculated SH press. Drop | = 3.5 kg / cm2 |
| Drum pressure when MSSV floats | = 46.5 + 3.5 = 50 kg/cm2 g |
| Margin | = 1 kg/cm2 g |
| Selected pressure | = 50 + 1 = 51 kg/cm2 g |
| Drum I SV set pressure | = 51 / 0.95 kg/cm2 g |
| Drum I SV set pressure | = 53.7 kg/cm2 g |
| Say, Drum I safety valve set pressure | = 54 kg/cm2 g |
| Difference between drum I & II SV set pressures | = 1 kg/cm2 g |
| Drum II SV set pressure | = 54+1 = 55 kg/cm2 g |
| Economiser pressure drop | = 1.5 kg/cm2g |
| Control valve pressure drop | = 2 kg/cm2g |
| Feed line pressure drop | = 1 kg/cm2g |

**Pump duty Point 1**

| | |
|---|---|
| Pump head required during drum SV II floating | = 55+1.5+2+1+1.5 kg/cm2g |
| Pump head at duty point 1 | = 61 kg/cm2g |
| Flow at duty point 1(MCR Flow ) | = 35000 + 400 = 35400 kg/h |

**Pump duty point 2**

| | |
|---|---|
| Pump head at duty point 2 | = 44+3.5+1.5+2+1+1.5 kg/cm2g |
| | = 53.5 kg/cm2g |
| MCR flow | = 35400 kg/h |
| Flow margin | = 15 % |
| Flow required at duty point 2 | = 35400x (100 + 15) /100 kg/h |
| | = 40710 kg/h |

**Summary**

| | |
|---|---|
| **SH safety valve set pressure** | **= 46.5 kg/cm2g** |
| **Drum safety valve set pressure 1** | **= 54 kg/cm2g** |
| **Drum safety valve set pressure 2** | **= 55 kg/cm2g** |
| **Min relieving capacity of SH safety valve** | **= 15400 kg/h** |
| **Min relieving capacity of Drum 1 safety valve** | **= 11750 kg/h** |
| **Min relieving capacity of Drum 2 safety valve** | **= 11750 kg/h** |
| | |
| **Feedpump flow at duty point 1** | **= 35400 kg/h** |
| **Pump head at duty point 1** | **= 61 kg/cm2g** |
| **Feedpump flow at duty point 2** | **= 40710 kg/h** |

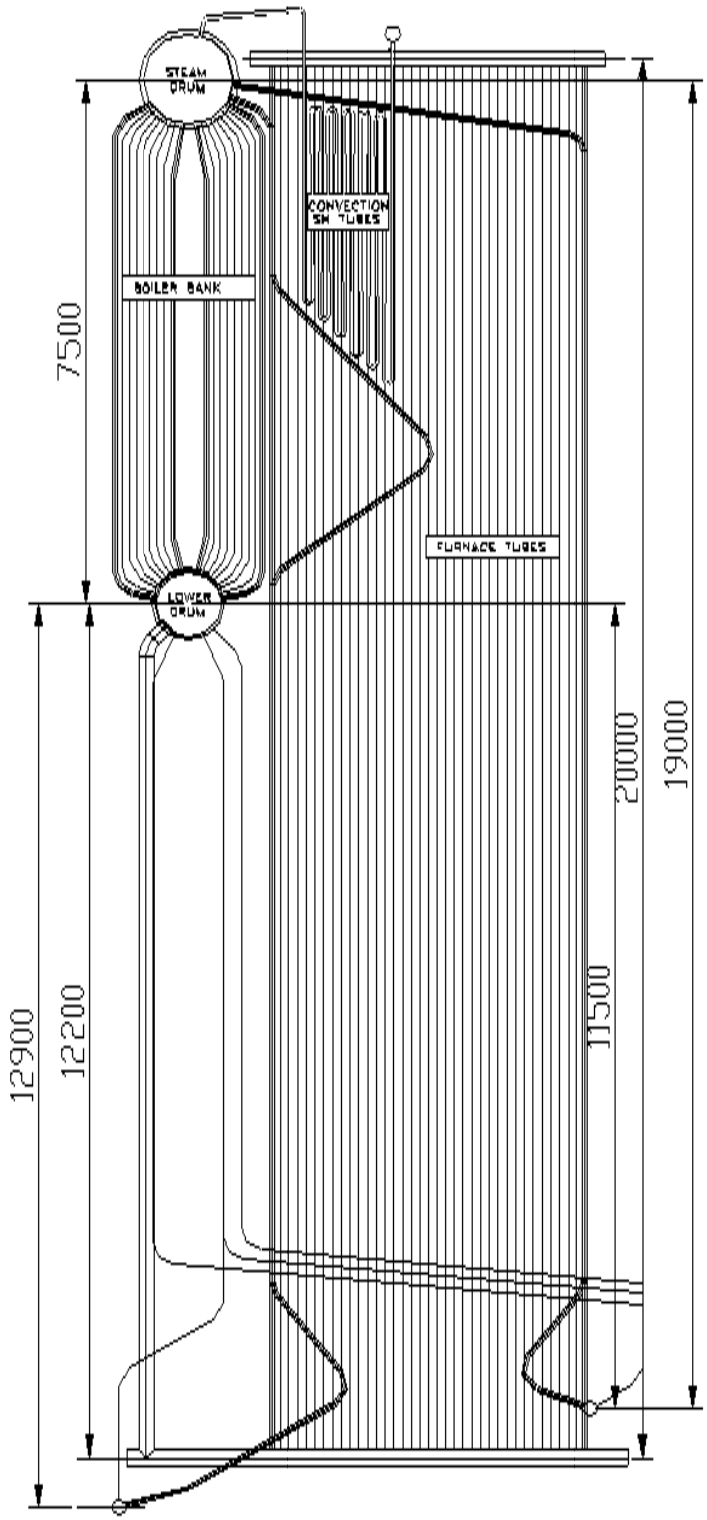


FIGURE 1. PRESSURE PART ARRANGEMENT OF 35 TPH BOILER

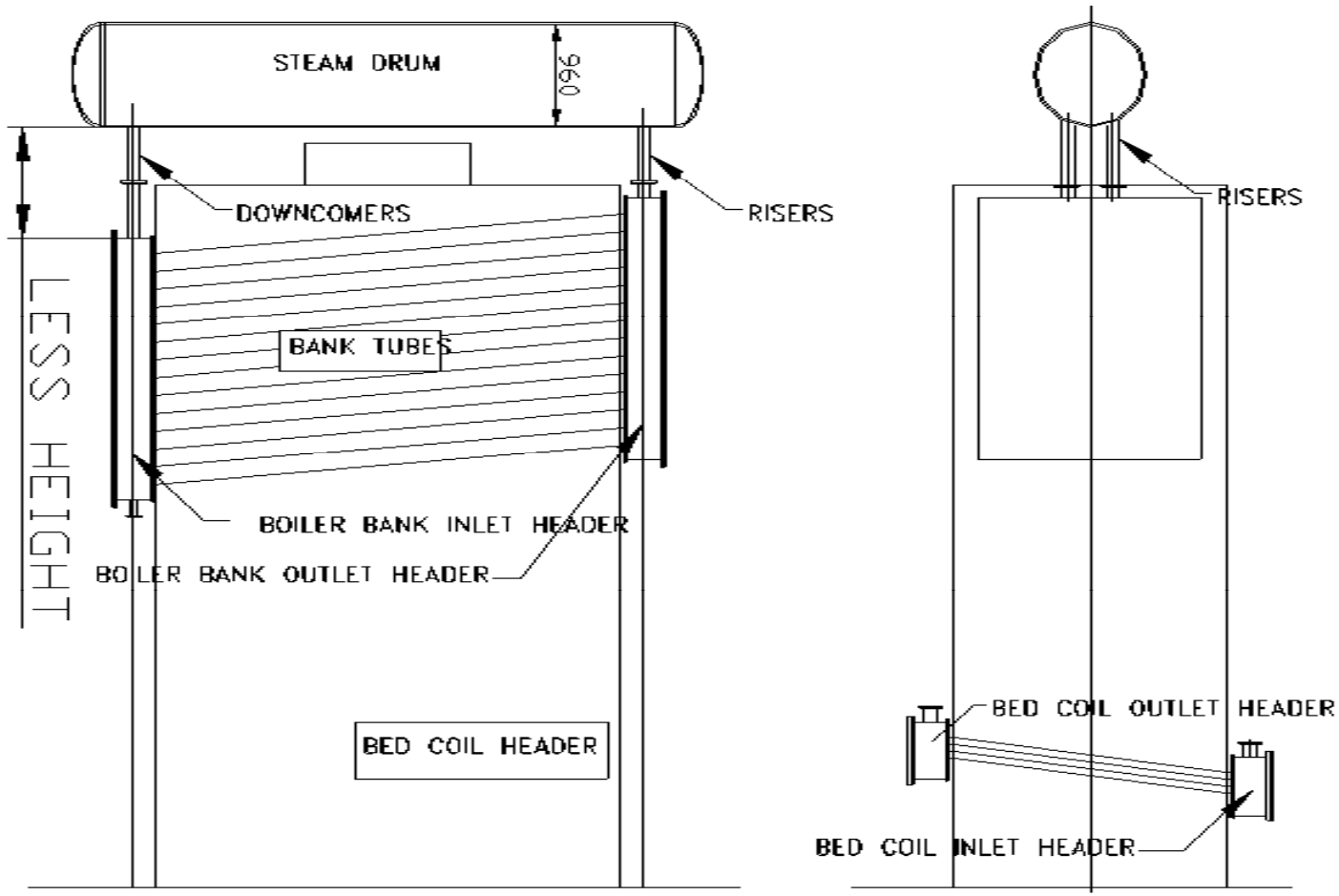


FIGURE 2 : TUBE DISTORTION IN SINGLE DRUM BOILER

**IS YOUR GAUGE GLASS FAILING OFTEN?**

A customer had been facing gauge glass failures ever since the boiler was commissioned. He asked me how could this happen. He reported that water keeps on trickling down the gauge glass from steam side. This happens in both side water level gauges.

There can be two reasons for this. One is Foaming of boiler water. Another reason can be the un-insulated pipes connecting the level gauge. Insulation of the pipes can be easily attended to. Foaming leads to dancing of water level gauge. You may observe water fluctuations to an extent of 50 mm. Foaming can occur due to several reasons. Foaming not only affects the water level but also steam purity.

Foaming - This is the formation of foam in the space between the water surface and the steam off-take. Foam on a glass of beer sits on top of the liquid, and the liquid / foam interface is clearly defined. In a boiling liquid, the liquid surface is indistinct, varying from a few small steam bubbles at the bottom of the vessel, to many large steam bubbles at the top.

The following are indications and consequences of foaming:

- Water will trickle down from the steam connection of the gauge glass; this makes it difficult to accurately determine the water level. It leads to frequent gauge glass failure.
- Level probes, floats and differential pressure cells have difficulty in accurately determining water level.
- When low water level happens, the boiler will trip unnecessarily.
- Phosphate levels are uncontrollable. Phosphate hide out is experienced. All of a sudden you will find phosphate level going up even after stopping chemical dosage.
- Smaller drum sizes may lead to permanent foaming. At low loads the faming may not be experienced. The trend is towards smaller boilers for a given steaming rate. Smaller boilers have less water surface area, so the rate at which steam is released per square metre of water area is increased. This means that the agitation at the surface is greater. It follows then that smaller boilers are more prone to foaming.
- TDS level - As the boiler water TDS increases, the steam bubbles become more stable, and are more reluctant to burst and separate.
- Oil / Grease contaminated water will lead to high level of foaming.

***REMEDIAL MEASURES***

- Look for sources of suspended matter ingress. In can happen due to pre-boiler system corrosion. In many plants pH correction is not being done at DM / RO plant outlet. This leads to corrosion of piping / tank and thus boiler feedwater will be contaminated with iron powder. This accumulates in steam drum over the steam – water interface. Go for lining of the tanks. Raise pH at water treatment plant outlet itself.
- There can be sections of steam user equipment which is being started / stopped often. During every start, this process equipment sends its entire corrosion product to boiler along with condensate. Look for steam capping / Deaerated hot water circulation arrangement to preserve the process equipment from corrosion.
- The boiler itself foams if not preserved properly during outages.
- Turbidity increase during rainy season, if not treated properly can get into boiler water leading to foaming.
- Don’t dose excess chemicals. Don’t simply dose chemicals as per chemical vendor advice. Understand the purpose and regulate the chemical dosage.
- In some plants chemical dosing is done without continuous chemical dosing system.

- Condensate pH control can be adopted by use of volatile chemical dosage. Thus condensate line corrosion can be avoided.
- Anti-foaming agents may be added to the boiler water. These operate by breaking down the foam bubbles. However, these agents are not effective when treating foams caused by suspended solids.

---

**FANS AT WORK IN BOILERS**

Today many Boiler users are quite knowledgeable, to buy a boiler with high heat transfer surfaces at a competitive price. After installation suddenly they are perplexed why the boiler does not generate the required steam to meet the process demand. Sometimes the problems are related to fan and the draft system design.

Author wishes to share his design and troubleshooting experience for the benefit of boiler users and the boilermakers. In this article the case studies are presented.

***CASE 1***

The boiler was a 30 TPH bagasse fired one. In this installation two 60 % capacity ID fans were provided. Both ID fans had to be kept in operation to meet the steam demand. The furnace draft was inadequate. There was lot of back firing whenever the boiler load was increased beyond a point. The ID fan inlet ducting arrangement was provided as shown in figure 1. The pressure drops were checked along the Flue gas path and found to be OK as per design.

It was doubted that there could be interrupted gas flow, as the gas had to split into two streams in opposite directions. Hence a partition plate was introduced in the inlet ducting as shown. And it worked. The smooth flow of gas in to the ID fan inlet now ensured the design performance of the ID fans.

***CASE 2***

The boiler was provided with a high pressure FD fan to meet the combustion air requirement of a 30 TPH FBC boiler. Client reported problem of noise & vibration from the FD fan particularly at partially loaded condition. FAN vendor could not resolve the problem. The sound could be heard at the factory entrance which was nearly half a kilometer away from the boiler house. On a close inspection of the inlet guide vane (IGV), it was observed that the IGV would induce a swirl motion to the entering air in a direction opposite to that of Fan rotation. The linkages were removed and the IGV was totally modified so that the rotation of swirl was in the same direction to that of FAN. Incidentally the Fan vendor had tried just reversing the IGV. This would not change the swirl direction.

The problem was solved after the turbulence created by the IGV was removed. See figure 2.

***CASE 3***

The boiler was provided with a fluidized bed combustor. The capacity of the boiler was 6 tph. The FD fan was not developing the required head. The bed could not be fluidized under cold condition.

Client had planned for replacement of FD fan. Yet it was felt that the problem could be related to obstruction at Fan mouth. The FD fan was provided with a circular damper as shown in figure 3. The fan was too small to provide an Inlet guide vane. The FD fan inlet damper was too close to the Fan inlet. As such the FD fan entry velocities are kept as high as 25 m/s by fan vendors. It is very necessary to have a proper inlet system, which would ensure a free uninterrupted flow to the eye on the impeller.

A small length of duct was provided in between the Damper and the Fan. The fan served its purpose. It is necessary to check the velocity at the inlet flange of fan and provide necessary transition to reduce the velocity and thus the damper draft loss.

***CASE 4***

In this case the fan assembled by the vendor was wrong there was no overlapping of the Inlet mouthpiece in to the Impeller. This overlapping is very important to realize the design performance of the Fan. Recirculation of air / gas is reduced by the overlap. The overlap was provided and the fan proved its capacity.

***CASE 5***

It was a case again related to improper assembly. There was excess overlapping and the impeller had been placed much forward than what was designed. Some manufacturers do specify the back plate to impeller clearance. Since this was a shop-assembled fan from vendor, this information was not available. Once the impeller was pulled out, keeping a minimum overlapping between impeller and inlet mouth, the problem got solved. In narrow width impellers this would be a common problem. When the mouthpiece is projected too much inside, the full impeller width is not utilized and hence both volume handled and head developed will be low.

**CASE 6**

There were 5 x 35 TPH boilers with this client. The client had complained that the boiler performance was OK for the four years. Later on the boiler never generated rated steam capacity. The entire flue path was checked for any air ingress. The leakages were arrested. Yet there was a shortfall in capacity. The ID fan was opened and inspected. It was found that the portion of inlet mouthpiece was cut and removed. On inquiry with maintenance staff, it was learnt that this had to be done for replacement of ID fan impellers in all five boilers.

It was true that the ducting system did not have any provision for removal arrangement of the impeller. The suction ducting should have been provided with a spool piece or an expansion joint, to facilitate easy replacement of the impeller.

**CASE 7**

Once a client owning a rice mill called up for solving his chimney vibration problem. Not only that. The residents around the plant could not use their phone, as there was noise interference. People who have the habit of sleeping on floor complained that they hear humming noise.

The problem boiled down to fan design. There is a minimum clearance to be maintained between the casing and the impeller at the cut off. When this is less, the fan develops high frequency air pulsation equal to no of blades multiplied by fan rpm. This high frequency noise had lead to chimney vibration. The clearance at cut off was reduced and this solved not only the chimney vibration but also the nuisance to the surrounding residents. See figure 5.

**CASE 8**

A common ducting arrangement followed by the boilermakers is shown in figure 6. In one case, the ID fan was mounted on concrete slab of the first floor. The ducting arrangement was as shown in

figure 6. The Client experienced vibration of the floor slab. He had procured a new ID fan from different manufacturer to solve the problem. The vibration continued. Client always blamed the vibration due to improper balancing. The ID fan was brought to ground and run without any connected ducting on suction side. Of course on the discharge side a damper was put to avoid overloading of the motor. The fan ran smooth. Client realized that the circular damper and the bend ducting in front of the fan were the causes. The bend & damper had prevented the smooth flow of gas in to the impeller eye. A suction box design was adopted as shown in figure 7, to remove the vibration.

## CONCLUSION

The fan performance is linked to ducting system associated with it, both at suction side and discharge side. Improper ducting leads to poor performance of fan. Before we blame it on the boiler / combustor, a closer examination of ducting system is required.

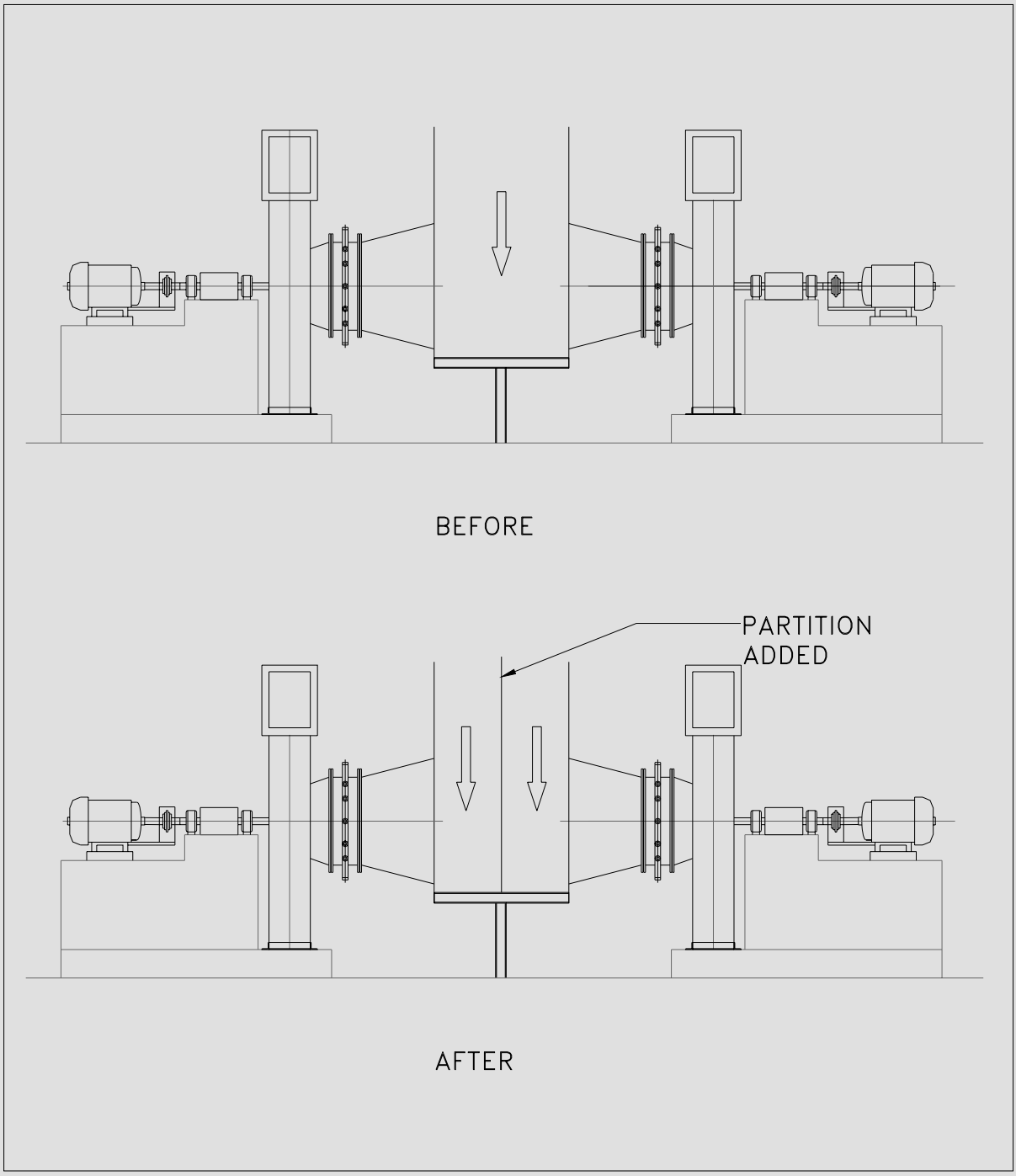


FIGURE 1

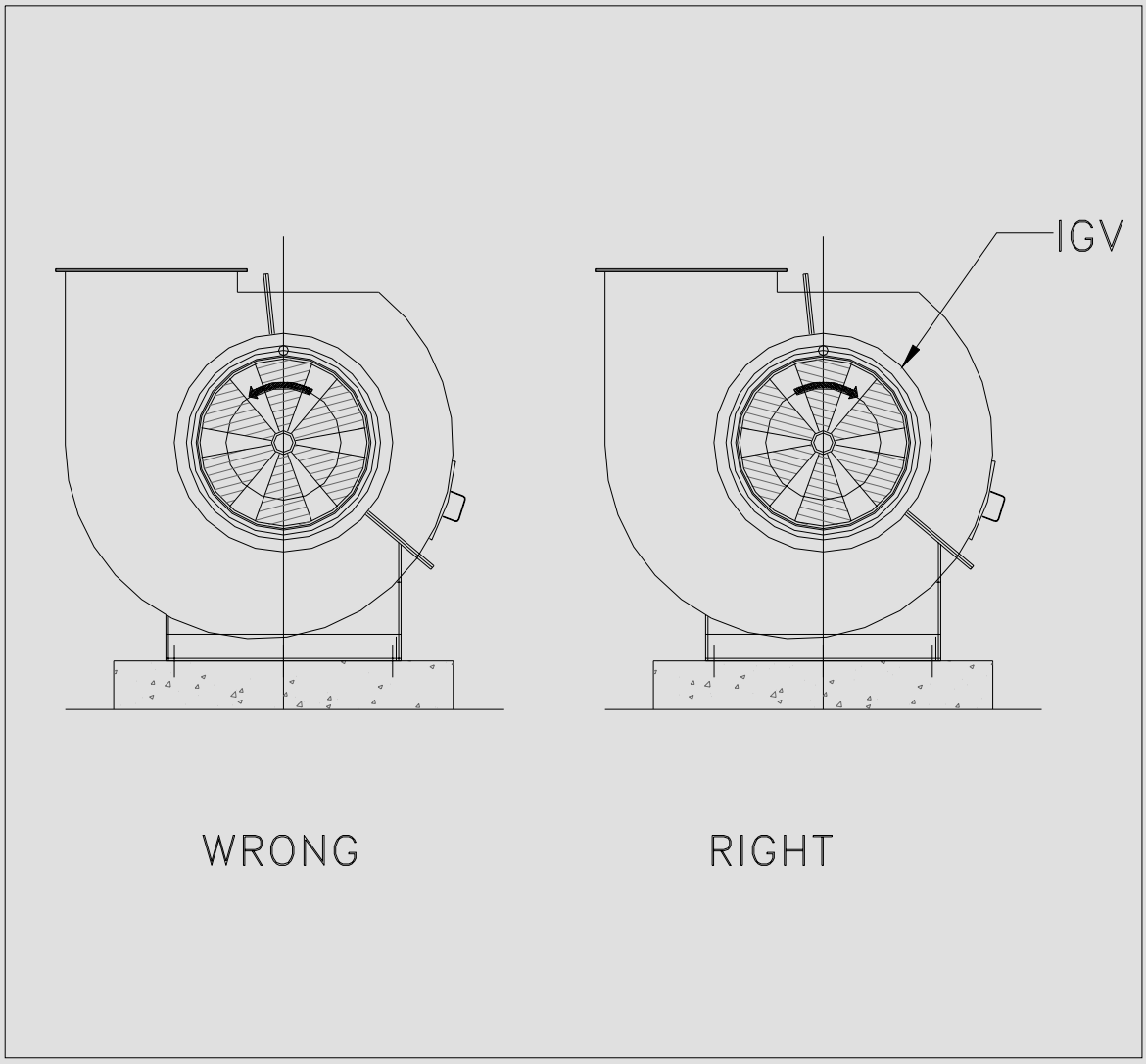


FIGURE 2

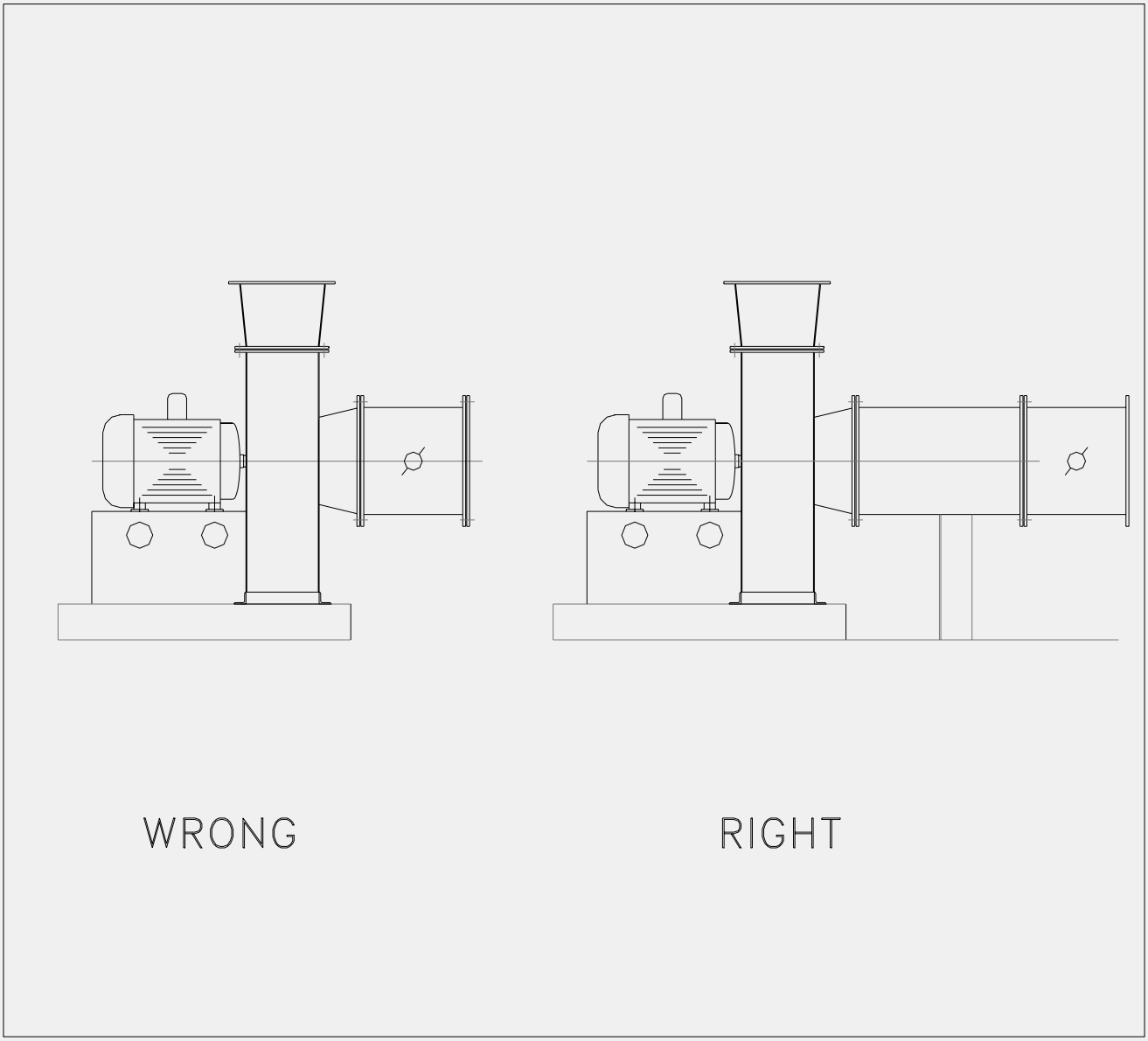


FIGURE 3

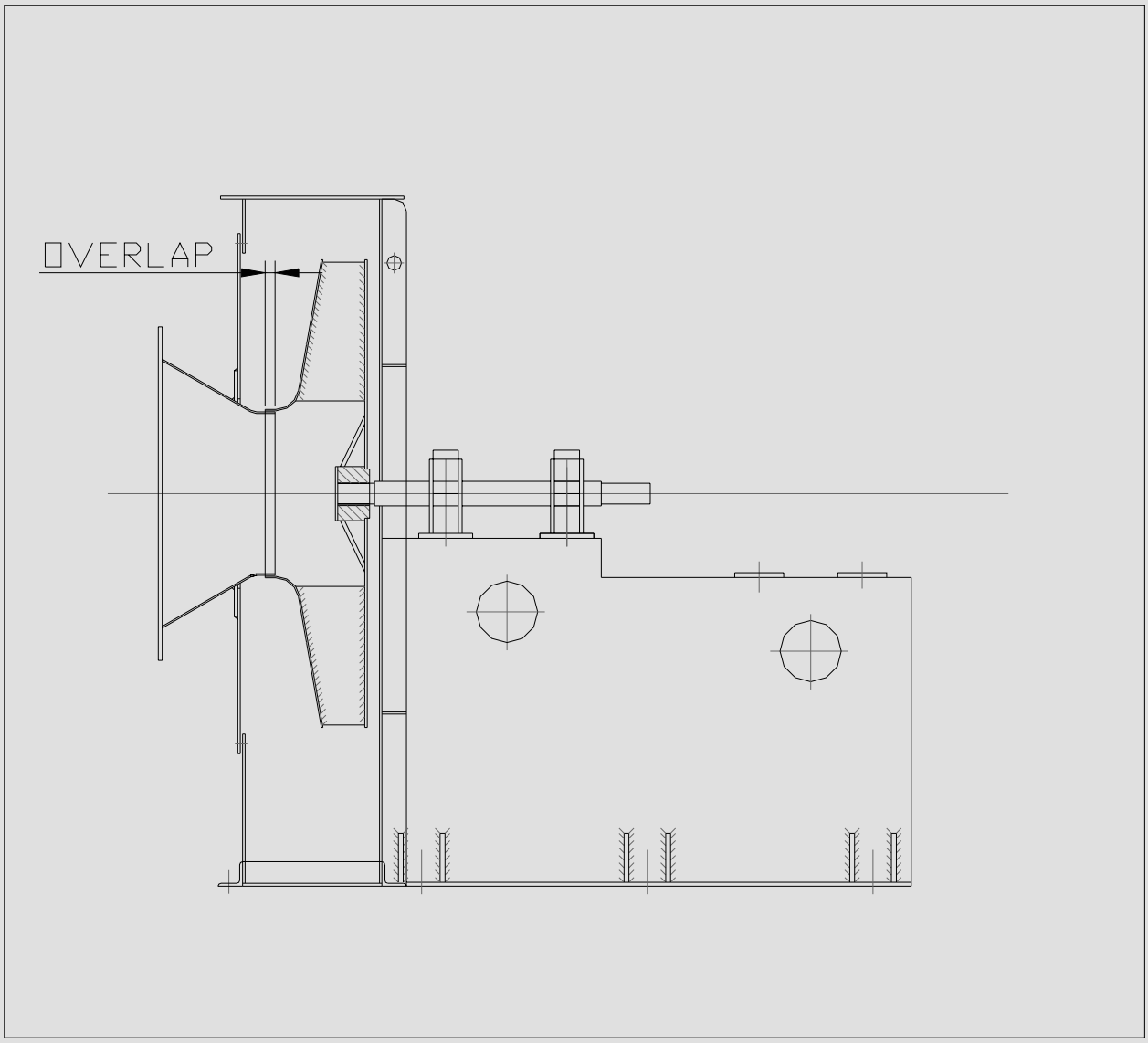


FIGURE 4

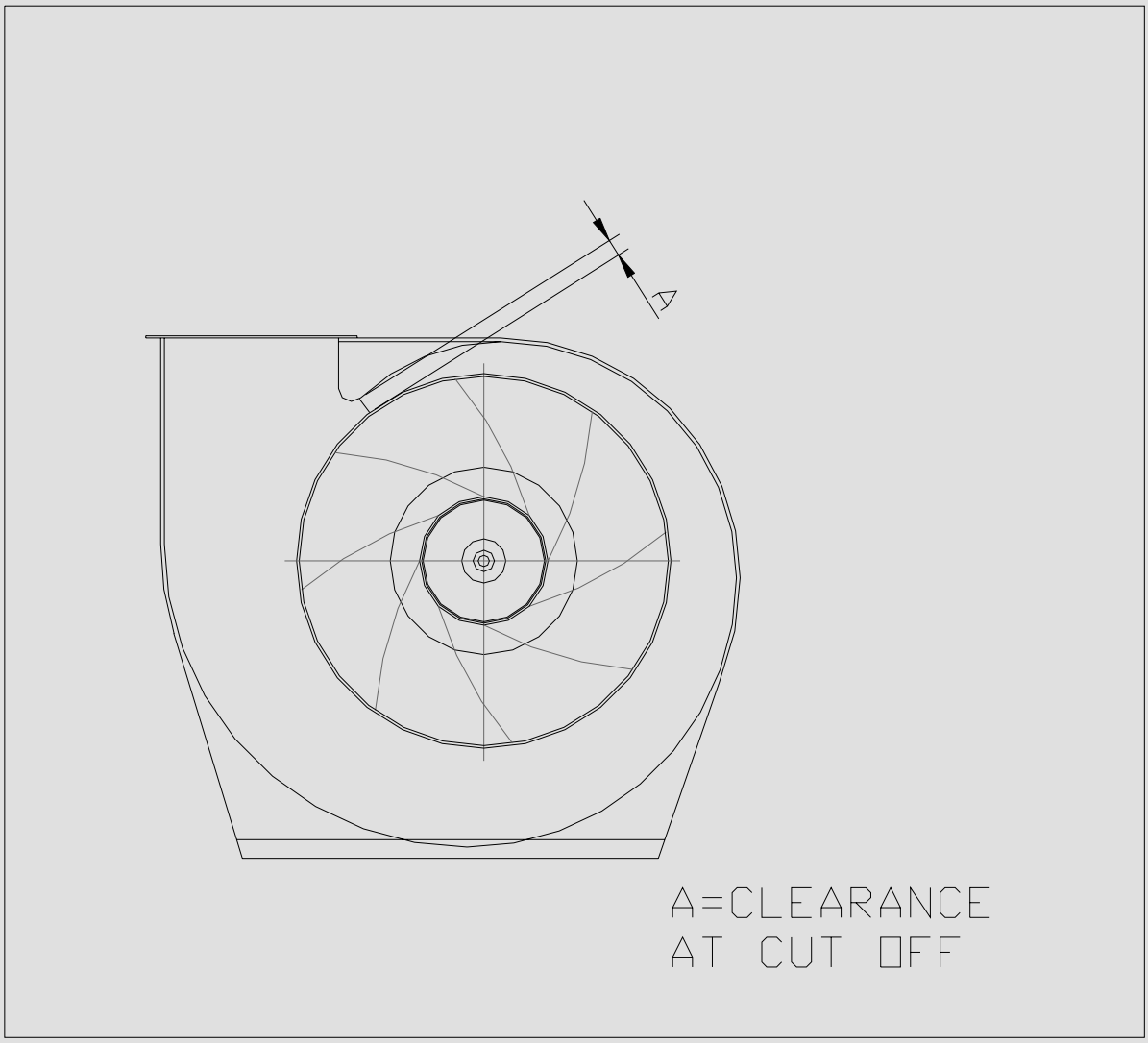


FIGURE 5

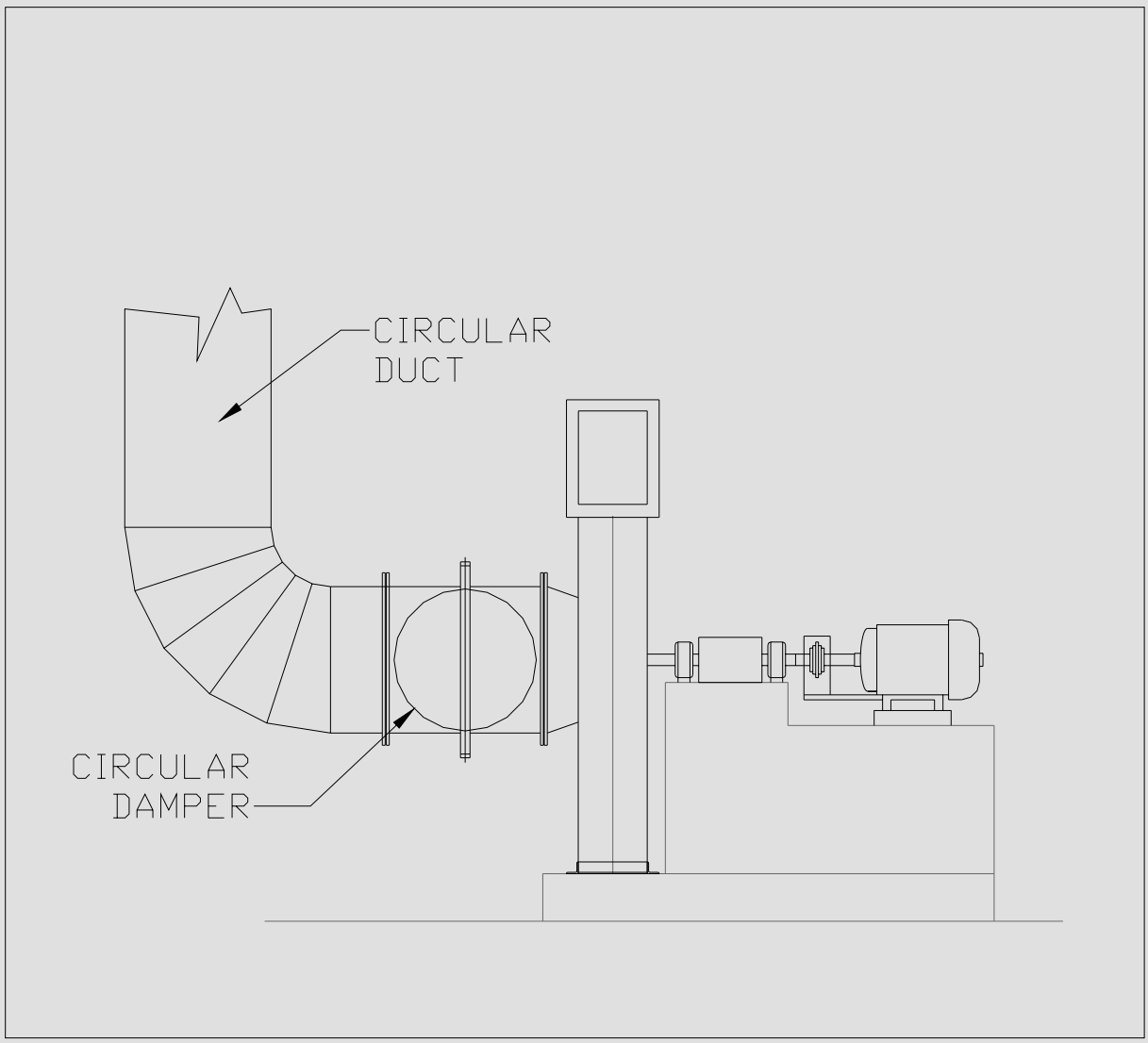


FIGURE 6

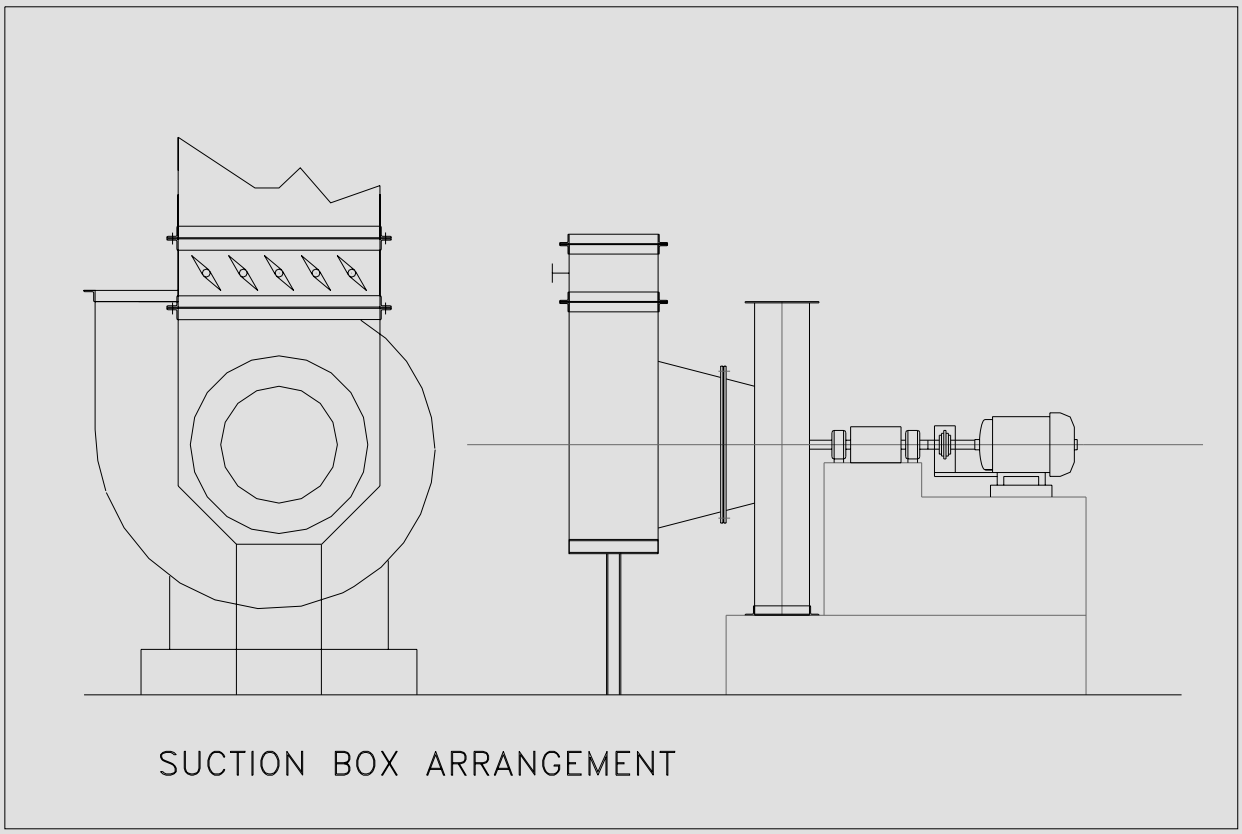


FIGURE 7

Photo 1: One more installation with flap damper right at the fan inlet.

**EROSION PHENOMENON IN BOILERS & REMEDIAL MEASURES**

Last two months had been a special month of erosion diagnosis for me. The cases attended include high pressure high capacity AFBC & PC fired boilers. I always preferred to have a personal inspection of the boilers designed by me at least after the first year of operation. My focus was to understand the preferential erosion pattern which comes inherently due to preferential flow in the gas path arrangement. When the designers fail to take a feedback, the users suffer. Often users try their own ideas based on their past experience which may not really extend the availability but continues to give the failures quite often.

In this article I would try my best to introduce the readers to possible erosion mechanisms that occur in boilers.

***CONVECTION SUPERHEATERS / ECONOMIZER / EVAPORATOR***

There are many locations possible

1. Erosion in the end coils which come closer to the waterwall / cage wall
2. Erosion in the coils inside the bank
3. Erosion at the penetrations in the roof / side wall / casing
4. Erosion in coils facing ash impingement
5. Random erosion inside the bank due to ash clogging
6. Preferential erosion near hanger supports
7. Erosion caused by soot blower
8. Preferential erosion due to layout related mechanism
9. Erosion due to ash fouling

*Mode 1: Erosion of End Coils Near To Waterwall / Cage Wall*

This happens when the end coils are very close to waterwall. It is preferable to have a clear gap of 40 mm from the waterwall / cage wall. Apart from this the relative gap between the coils versus the coil to wall matters. If the gap is more then the preferential gas flow takes place. I see many designers try to maintain closer pitch than the end clearance. This makes the gas flow to take place at the end gap. This can show up in erosion of tube bends of manholes.

Use of staggered pitch inside the coils can make the gas to flow preferentially between the end tubes & casing. If the coils to cage wall / waterwall / casing space is less than 40 mm, the erosion rate increases.

*Mode 2: Erosion of Coils Inside The Bank*

Case 1: when the coil spacing is non uniform due to improper erection the coil can fail due to erosion. During the erection some coils may come out of lane abnormally making it susceptible for erosion.

Case 2: Coil spacing can be non-uniform due to inadequate number of hanger tubes or coil alignment bands.

*Mode 3: Erosion of Coils at the Penetrations*

Case 1: Wherever the coils penetration through the casing / side wall, there has to be sleeves to protect the tubes against erosion. There can be erosion due to the preferential flow of ash along the casing / wall.

Case 2: Inadequate sealing can cause erosion of tubes due to air ingress. The ash that comes out through the leaky location can fall back under negative draft cutting the tube.

*Mode 4: Erosion in Coils Facing Ash Impingement*

Case 1: There are possibilities of ash slagging in radiant SH due to fuel ash characteristics. As the ash fuses, there is slagging & recrystallisation and creation of ash with sharper edges. If there are tubes facing the ash stream, then there is erosion. The erosion rate is high if the tubes are placed in the gas lane.

Case 2: when there is pitch change / alteration in pitch from the previous bank, the trailing bank suffers erosion due to ash impingement. In sufficient space between the two banks causes erosion. The tubes are seen with ash impingement / erosion marks.

*Mode 5: Random Erosion of Bank*

Case 1: when there are possibilities of ash bridging due to narrow spacing of coils, the gas streams takes a tortuous path through the free gas flow area. The ash clogging can happen due to trapping of ash lumps inside the bank. This happens in horizontal bank. Staggered pitch causes such erosion.

*Mode 6: Preferential Erosion at Hanger Tube Support Points.*

Case 1: when hanger tubes are pitched closer, they act as impingement separators for the dust. The dust preferentially travels along the hanger tubes. Erosion is seen in between the hangers & the coils.

*Mode 7: Ash Deposition on Uncooled Supports*

When the ash has fouling / slagging properties, there is deposition on uncooled supports & spacer bars / alignment bands. The ash builds over the uncooled support. Nearby areas, erosion is experienced.

*Mode 8: Erosion Due To Soot Blower*

Worn out soot blower nozzles, stuck lance tubes, higher soot blowing pressure, presence of condensate in the soot blowing steam, frequent operation of the soot blower can cause erosion of tubes. Soot blower can elutriate the settled ash in to gas steam and cause erosion.

*Mode 9: Preferential Erosion Due To Layout*

The layout of the pressure parts can matter to a great extent on preferential erosion.

Case 1: Accommodating headers inside the flue path causes reduction in apparent gas flow area. This can accelerate the gas velocity and thus erosion.

Case 2: Sharp gas turns cause preferential erosion. There is more gas flow & dust load causing erosion in certain locations.

***REMDEIAL SOLUTIONS***

- Gas baffles: gas baffles are provided to slow down and to reduce the preferential gas flow.

- Protective shields: Shields are engineered to protect the parent tubes. The shields would be replaced as per the frequency

- Sleeves: Full cover on tubes are provided to avoid damage to parent tube at the penetrations in waterwall / steam cooled wall / casing

---

**EFFECT OF AIR INGRESS IN BOILERS**

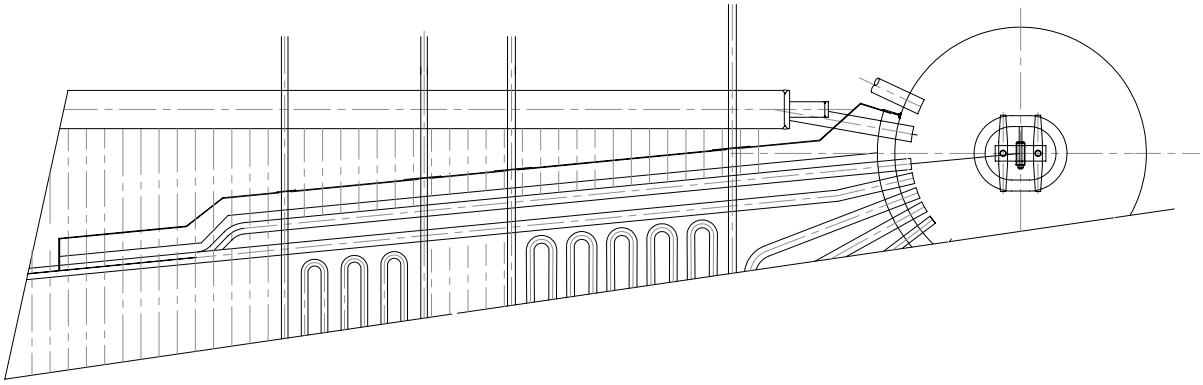

**Figure 1**

Many boiler users are ignorant about the air ingress in their boilers. In this article, the detrimental effects of air ingress are brought out. Some of the readers may feel that I have exaggerated some points. Reality is that some of our fellow boiler users are carrying losses with air ingress.

***WHAT IS AIR INGRESS?***

In balanced draft furnace, the FD fan / SA fan / PA fan pump the air in to the furnace. The flue gas produced is drawn through the boiler by the ID fan. Hence the furnace and downstream the furnace the boiler is under negative pressure. Thus if some leakage spots are there, the ambient air is drawn through such openings.

***WHY IS THIS AIR INGRESS?***

By virtue of boiler configuration, openings are to be made in the boiler enclosures / Waterwall enclosure. If a seal is improperly designed or improperly erected the seal may fail and develop leakages. The seals may not have been erected properly. It is possible some of the seals are not taking care of thermal expansion or the service conditions and thus leakage may develop. One step further the repairer has not put back the seals as per design. A user can be pardoned for not doing the seal work during a maintenance since he may not have the blue print of the original design. Let us begin on what is this air ingress.

***WHERE IS THE AIR INGRESS?***

In the balance draft furnace there are several areas for ingress. The possible locations include

1. Roof top where SH coils penetrate in
2. Membrane walls where the convection banks penetrate
3. Roof tubes termination in steam drum
4. Boiler bank tubes termination in side, front, rear of steam drum
5. Boiler bank tubes termination in side, front, rear of water drum

6. Between boiler bank hopper and water drum
7. Hopper manholes
8. Hopper isolation gates & flanges
9. Worn out rotary ash feeders
10. Failed fabric expansion joints
11. Corroded metallic expansion joints
12. Incomplete fastened flange joints
13. Improper roped flanged joints
14. Refractory wall cracks
15. Eroded / corroded APH tubes
16. Economiser casing joints
17. Access doors
18. Roof panel to side walls side joints
19. Water drum to bank casing plates
20. Nose panel to Water drum termination
21. Soot blower openings
22. Gas pressure tappings
23. Leaky view holes
24. Boiler bank casing plate joints

***HOW TO LOCATE THE AIR INGRESS?***

There can be many more possible locations where the air leaks in. An easy way in solid fuel fired boiler is of course the ash would leak out in locations where the air goes in. You can always see the fresh ash spillages around leakage points.
To locate the leakage points the smoke test is done. Another way is to carryout a flame test with ID fan running. Having identified the leak points measures are to be taken to arrest the leakage. Some leakages are simply rectified. But at some locations, the design may be faulty, for which one has to call up the designer / consultant for help. The seals may call for better contemporary design. The design may need for a review from the boiler thermal expansion point of view.

***FINE, SO WHAT IF THE AIR GOES INSIDE?***

The list is quite long. Some of the points cost heavy for some boiler users.

*1. High unburnt carbon in fly ash*
It is a general practice to trim the air flow based on O2 indication from flue gas. When the air leakage is present the O2 indicated by the on-line O2 meter would mislead the operator. The furnace runs in to substochiometeric condition. This ultimately leads to increased to unburnt.

*2. Increased fuel consumption.*
The air ingress downstream the flue path leads to increased heat loss in the chimney. To compensate for the heat loss one has to feed more fuel.

*3. Overloaded ID fan*
When we experience that the ID fan is falling short of capacity, we tend to invest in new ID fan / we start with fan vendors for increasing the fan capacity. In many cases the second ID fan is opted with higher capacity with the assumption that the existing ID fan is short of capacity. In some cases even the second ID fan may also prove useless as the leakage persists and the furnace still goes with positive pressure. The boiler operating expenses increase due to additional power consumption.

*4. Back fire in furnace*

The back fire is continuously experienced. The ID damper is at full open position. The operator has no option except to continue with the problem. The unsafe situation persists. The Insulation of the boiler is spoilt on this account. Soot is seen around the furnace access doors.

*5. Secondary combustion in superheater zones*

The furnace begins to starve when the air ingress is more from roof seal box / Convection SH seal box. The leakage air allows secondary combustion of volatiles. The SH temperature becomes uncontrollable. Particularly at the time of load variation, the fuel feeder rpm is regulated by the operator and he finds the SH steam temperature rises faster than the pressure. This is seen in boilers fired with biomass fuels.

*6. Secondary combustion in Boiler bank hoppers*

The Unburnt fuels burn at the boiler bank ash hoppers, since the furnace is at substochiometeric conditions when there is air ingress is present downstream. The unburnt fuel travels downstream instead of completely burning in the furnace. The ash hoppers get distorted due to secondary combustion.

*7. Ash blockages in boiler bank Baffles*

When the ash is not fully burnt in the furnace, the flow ability of ash comes down. The ash particles now contain fuel particles which may be fibrous / irregular in nature. Thus the fuel and ash settle at every possible location, where the surfaces are less inclined or flat. The ash does not flow freely and thus ash accumulates at baffles. Whatever the draft is set the ash does not flow due to nature of the accumulations.

*8. Ash blockages in Hoppers*

Carryover of fuel particles to ash hoppers would lead to combustion in ash hoppers. Lumps form due to static combustion. We try to poke the ash drain pipes but situations repeat often. The combustion is not complete at the furnace and hence the troubles.

*9. Excess Desuperheater spray*

In most of the designs the furnace is designed to be hotter as the combustion is to take place here. The furnace dimensions are so chosen, to achieve the necessary residence time for the fuel particle to burn fully. Starvation occurs when the air can bypass the furnace and enter the flue gas downstream. No one can assess the amount of air ingress at leaky zones. Under such conditions the combustion zone shifts to SH section. Simultaneous combustion and heat transfer at SH section leads to excess Steam temperature. To our luck if excess capacity is available in the spray control valve, we tend to spray more. More spray will lead to solids added to SH section. The solids leave behind in SH leading to deposit related failures. More the spray the turbine blade deposition is experienced.

*10. Clinkers formation in furnace*

The furnace temperatures are controlled by incorporating necessary heat transfer surface and by admitting required excess air to cool down the gas below the ash melting temperatures. The excess air can not be given in the furnace when the ID draws the leakage air downstream. Refractory furnaces get coated ash deposits. Honey combing of ash accumulations is seen in some agro waste fired boilers. Refractory roof tops eventually collapse due to increased weight.

*11. High furnace temperatures and refractory walls cave in*

The excess air when not given in the furnace, the furnace temperature exceeds the design gas temperatures. When the fuel does not have much of ash, the furnace temperatures go up. The refractory walls expand unusually leading to furnace walls caving in.

*12. Furnace doors failures*
Furnace doors in balanced draft furnaces are refractory lined to thickness of not more than 250 mm. The doors get cooled by the outside ambient air present around the door. When the furnace is under +ve pressure the ambient air is not present near the vicinity of the doors. Then the doors bulge. The manhole frame and manhole distort due to heat. We think the doors fail due to material defect.

*13. Furnace refractory failures*
The refractory totally collapse often since they loose strength at higher temperatures. The High temperatures are experienced when the excess air is less and the furnace temperatures go up. The refractory design would be unstable at higher service temperatures unless the design is modified for the new service conditions.

*14. Furnace seal plates run hot*
Many furnaces, particularly in small boilers, are provided with casing plates to prevent air ingress. When the furnace temperatures are controllable due to insufficient excess air, the casings run hot. When the furnace goes positive, the gas reaches the air gap between the casing plate and the refractory. The flame / smoke is seen. Particularly in gas fired boilers the gas burns inside the casing.

*15. Fly ash nuisance around the boiler*
The fly ash poses a great nuisance not only harming the eyes but also lungs. The boiler house becomes shabby. The industrial standards go down in front of your customers. The costs for cleaning the boilers go up. During maintenance, hours are to be allocated only for cleaning. The boiler downtime increases due to this.

*16. Metal wastage due to corrosion beneath ash accumulations*
Some fuel ash / coal ash has alkali content. Coupled with flue gas condensation, it would lead to corrosion of metals.

*17. Injuries to personnel*
Some of the boilers are provided with penthouses where, the ash accumulates to high level. It poses safety hazard for any one who enters the penthouse. The hot ash lying underneath could cause hot burns as well.

It is true not all the points apply to all boilers. Persons who have had experience of operating several types / makes of boiler would appreciate. Let us attack the leakages henceforth.

Photo 1: Furnace ash deposits in bio mass due to high furnace temperature

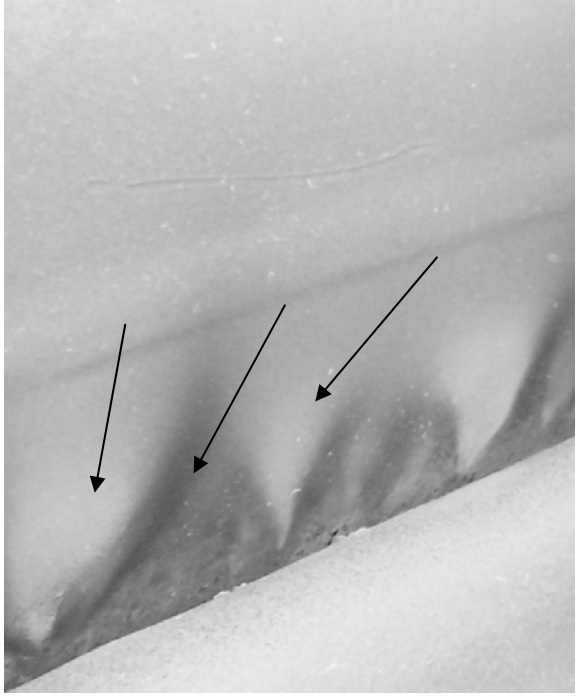

Photo 2: Marks of outside air ingress below water drum in a boiler

Photo 3: Fresh ash spills around leakage points in roof seal box

Photo 4: Ash waterwall roof panel inside penthouse. Wherever the cracks are there, the air gets inside.

Photo 5: The failed metallic expansion joint is seen after removal of insulation cladding at Economiser inlet duct. Such leakage locations lead to wrong to O2 indications.

Photo 6: Indications of smoke at penthouse confirm air ingress. When the furnace pressure goes positive at times, the flue gas comes out.

Photo 7: Indications of dust below waterwall nose panel. The seal was not done as per drawing.

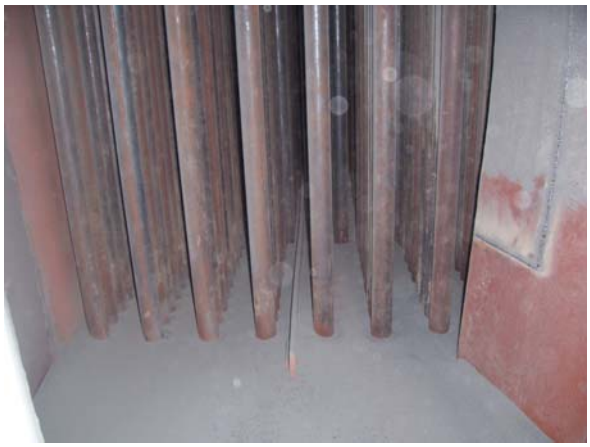

Photo 8: Ash inside airpreheater confirms failure of preheater tubes. FD air directly mixing with flue gas can lead to starvation inside furnace.

## A FREAK INCIDENT OF A BED SUPERHEATER FAILURE

Case studies are interesting. This case is very interesting one. The customer had a bed SH failure. At the time of the visit, the failed bed SH tube was not available at the plant. It was sent to boiler manufacturer for their analysis. However the photograph was available to see the nature of failures.

### *A BRIEF ON THE BOILER*

This is a 100 TPH, 105 kg/cm2, 520 deg C coal fired AFBC boiler. The unit has been in operation for more than 3 years. The boiler is equipped with under bed feeding arrangement. The boiler has 5 compartments.

### *OCCURRENCE OF FAILURE*

It was informed that there had been coal flow problems in the bunker & fuel line choking problems. This had led to the frequent non availability of the compartments. The turbine had come to base load often and at times the turbine had to be tripped. During the turbine trip, the MSSV was closed after slumping of the boiler. As the lines were being cleared, the compartment no 3 was activated and at this moment the bed SH had bursted. The bed SH tubes are located in $3^{rd}$, $4^{th}$ & $5^{th}$ compartments. The failure had occurred just above the fuel feed point.

### *ANALYSIS OF THE APPEARANCE OF THE FAILED PORTION*

As the failed bed SH tube edge appeared sharp ( see photo 1) and there was no long term swelling of the tubes, it was concluded that the tube had failed due to sudden & localized overheating (no indication of starvation). Other bed tubes did not indicate any burning appearance nor did the tubes show up any swelling in OD.

### *SUGGESTED FAILURE MECHANISM*

Localized overheating failure takes place when the metal is insulated from steam cooling by the presence of a dirt / deposit. The dirt gets transported from the steam drum to the failure spot. Above the fuel feed point the heat flux being high, the tube can fail. The combustion can take place when the coal is available from the fuel line or when the coal is spilled from the adjacent compartments.

### *DIAGNOSIS OF THE FAILURE*

Up to this point summarizing the cause was easy for me. I had to now prove the carryover mechanism. I requested for the inspection of steam drum.

1. The steam drum was opened and checked for possible carryover. The evidence of foaming & carryover was seen inside the drum.
2. The foaming had occurred due to high phosphate chemical dosage in the slumped boiler. In the discussion, it came out that the HP dosing pump used to be in operation during the when the boiler was hot slumped for attending coal jamming in fuel lines. On restart of the boiler, water being hot and concentrated with phosphate, foaming had taken place. The presence of foams could be seen up to the secondary drier. See photographs 2 to 7. At two or three places the whitish powder accumulations were seen.
3. For the last three months prior to failure, the boiler had been on high pH (values seen up to 9.8) and phosphate level was seen up to 15 ppm. Though this is not a direct cause for this failure, but

the boiler had been corroding and the drum water is seen to be dirty. The drum surface up to NWL is seen to be brownish indicating there had been corrosion at times. The corroded iron particulate remains could be seen in the surfaces of drum internals.

4. It was learnt that the boiler was filled always through the economiser for hydrotest purpose. This can transport any dirt from the boiler water to SH circuit. At some point of the time the dirt can get inside the tube and lead to localized overheating failure.

***I SUGGESTED FOLLOWING REMEDIAL ACTIONS TO AVOID FUTURE FAILURE***

1. The HP dosing pump start / stop shall be interlocked with the boiler feed pump.
2. The chemical dosing shall be regulated with respect to steam flow. For this purpose VFD is required at HP dosing pump. There can be additional control loop.
3. Always the SH should be filled first and the water should spill in to the steam drum and then filling can be continued through the economiser. A 65 nb filling line can be connected to SH drain header with suitable valves for isolation.
4. I advised customer not to operate the bed SH compartment unless the compartments with evaporator tubes are in operation.

***I SUGGESTED THE FOLLOWING PERMANENT REMEDIAL ACTIONS TO AVOID BOILER OPERATIONAL DISTURBANCES***

1. The root cause of the problem is basically from the coal handling plant. The vibratory screen blinding seemed to have caused all the troubles. Screen blinding is a serious problem during monsoon in the conventional vibratory screen. Flip flop screen is the right choice to handle high moisture coals.
2. The present coal feed arrangement above the drag chain feeder is not OK. The load of coal in the bunker allows compacting of coal. This sort of defect is seen in several installations. The feeder chute should be designed in such a way, that the pressure from the coal column is used for loosening the coal.
3. When the coal has more powder content and water content, the lumps form in the bunker. Rectangular shaped bunkers have sharp corners where the hopper walls join. Circular bunker with conical hoppers avoid this problem. A static bar screen above the feed hopper was recommended so that lumps could get filtered. This will prevent the lumps going to feeder & fuel feed line. This will avoid the PA line choking.

***LESSON LEARNT***

For every problem the diagnosis must be completed before simply putting back the boiler in operation. I liked the customer approach that he did not give up after the manufacturer failed to identify the cause. At least the future failure can now be avoided. I was very happy to talk in the group discussion arranged for the entire operating team.

---

Photo 1: This is the bed SH tube failure experienced. The failed portion is in the 3rd compartment. The edge of the failed portion of the tube is thin in nature. This indicates there has been sudden overheating situation.

Photo 2: The drum is with the mark of excess of phosphate in the drier area.

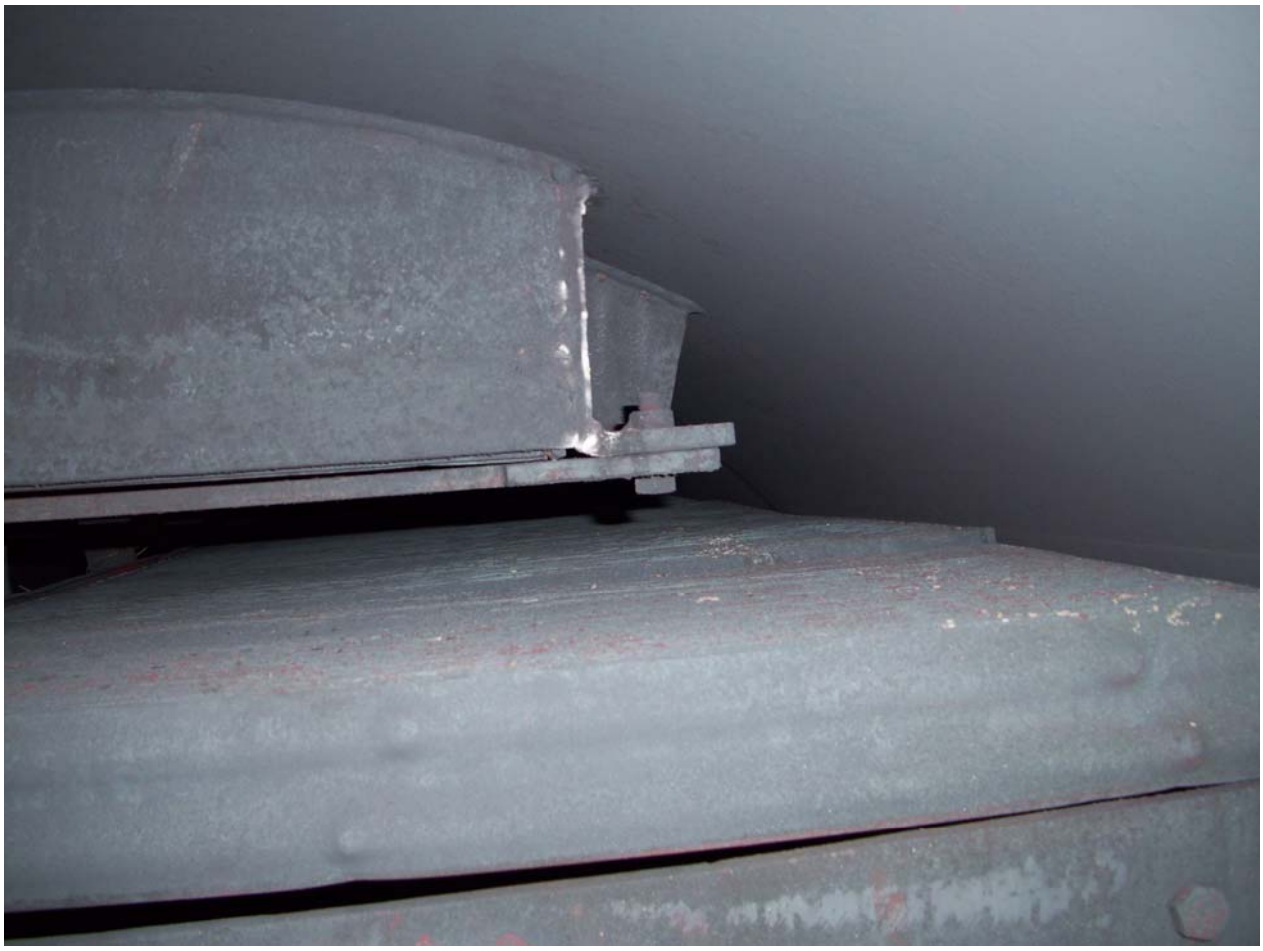

Photo 3: Presence of whitish deposit in the second stage drier.

Photo 4: The presence of whitish marks along the edge of the primary drier in the steam space.

Photo 5: The whitish sparkling particles seen above the normal water level in the drum. This must be due to foaming created by excess phosphate chemical dosing in the drum. The dosing had been on when the boiler was under slumped condition.

Photo 6: The whitish deposit seen at the weldment. The sparkling particles are seen above the normal water level. The dark colored water indicates that there had been high pH in the boiler water corroding the boiler.

Photo 7: The boiler water chemistry had not been alright. The boiler water regime had been outside the even the coordinated phosphate control curve.

Photo 10: Presence of mud in the boiler water. The back filling of SH to be practiced to avoid carryover of dirt to SH sections.

Photo 11: This is a boiler wherein the drum internal surface & turbo separators indicate the perfect boiler water chemistry.

Photo 12: The fuel feeding on the left side is what is in this plant. The weight of the coal acts on the feeder. It makes cakes of coal. The one on the right is what is in another plant. The coal slides through by virtue of the hydrostatic head of coal. The lump formation will be avoided.

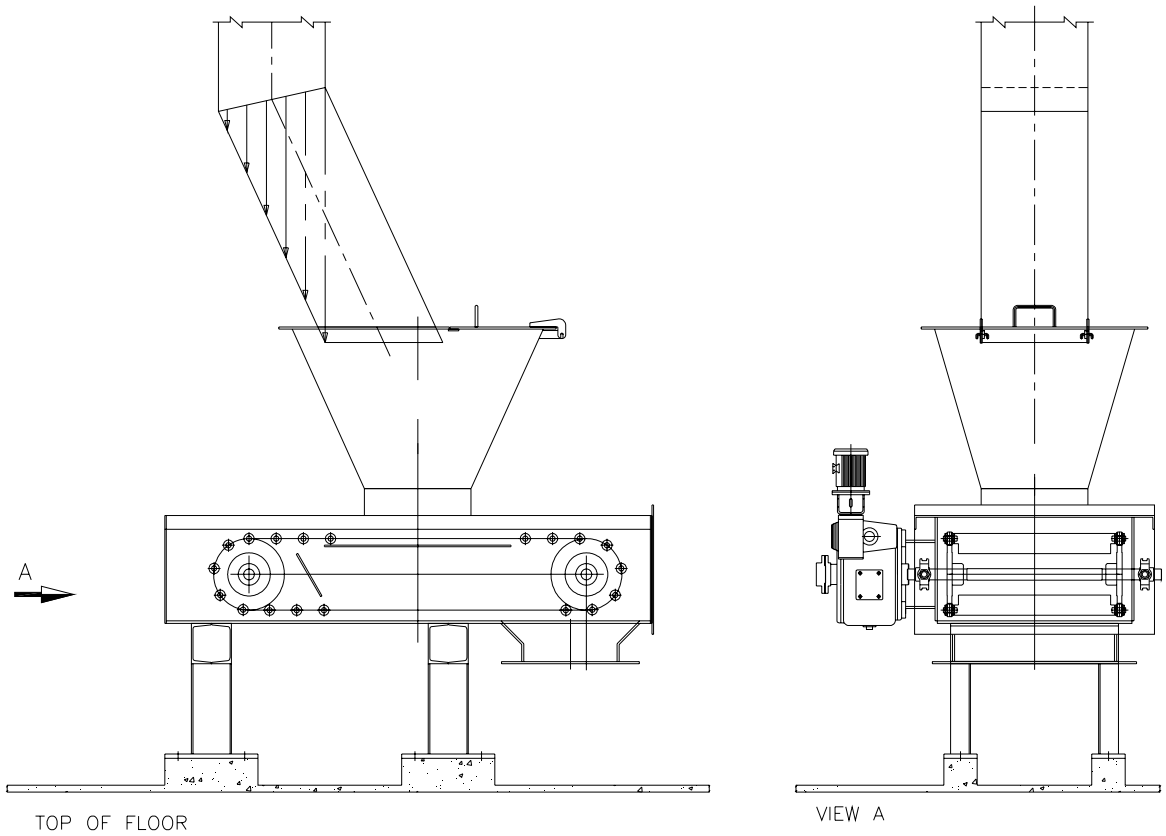


Figure 1: This is an illustration of the bunker outlet chute in which the hydrostatic pressure does not act on the feeder. At the same time the pressure helps in loosening the coal avoiding the coal flow problems and caking of coal powder during monsoon times.

**Typical applications for Flip-Flow-screens**

- Coke at 3 mm with 18 % moisture
- Lignite at 6 mm with 50 % moisture
- Coal at 6 mm with 15 % moisture
- Lime stone at 3 mm with 5 % moisture
- Iron ore at 5 mm with 10 % moisture
- Raw sand at 3 mm with 6 % moisture
- Compost at 10 mm with 40 % moisture
- Slag at 3 mm with 5 % moisture
- Salt at 5 mm with 3 % moisture
- Building rubble at 5 mm with 10 % moisture

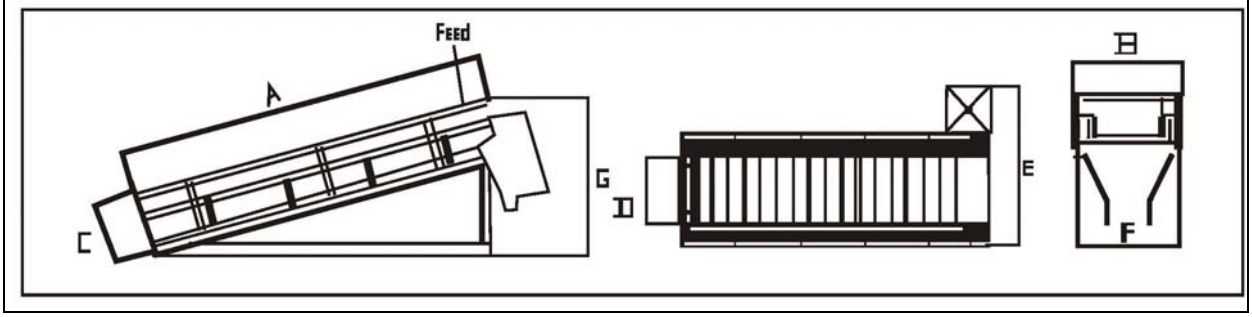


Figure 2: The flip flop screen is designed to work on high moisture.

# DESIGN OF FLUIDISED BED COMBUSTION BOILERS FOR MULTIFUELS

## *INTRODUCTION*

To be competitive in the market, the cost of production of a product has to be less. For many products, steam / power cost is the major factor. Many Industries have realized this, and have gone ahead with Multi fuel fired boilers, Multi fuel fired co generation plants & captive generation plants. Today, no single buyer thinks about single fuel for the boiler. In this article, the factors and their effects, which affect the boiler design, have been brought out for the understanding of the Boiler users.

## *BASIS FOR SELECTION OF FUELS*

The selection of fuels is to be based on the following factors. It is necessary to analyze the long range availability & economics of the fuels.

- Source
- Year long availability
- Transportation cost
- Handling cost at plant
- Fuel preparation cost
- Wastage / deterioration cost
- Initial cost of boiler
- Fuel handling system cost
- Pollution control equipment cost
- Ash handling system investment
- Ash disposal cost / difficulties
- Government regulations
- Fuel storage space requirement
- Cost of stocking
- Boiler maintenance cost
- Fuel price escalation

## *PARAMETERS WHICH AFFECT THE DESIGN OF BOILER*

➢ *FUEL HEAT DUTY*

The boiler design is based on the design fuel for which the design will be optimum. It is usually the inferior fuel. The inferior fuel is the one that calls for more fuel consumption. The flue gas produced will be more for the inferior fuel.

Depending on the location the main fuel chosen is coal / lignite / rice husk / De oiled bran / Bagasse. At times furnace oil / Natural gas are also being specified for 100 % boiler duty. The fuels that are specified for co firing are usually Bagasse pith, Rice husk, Biogas, Sawdust, Wood chips, Coffee husk. Co firing has an advantage that the fuel quantity as received is fired directly with the support of main supporting fuel. Many times 60 % of heat input may be substituted by the auxiliary fuel. Twin furnaces that may be required for certain combinations can be avoided, thus bringing down the initial investment cost.

Table 1 gives the ultimate analysis of fuel & GCV of varieties of fossil & agro waste fuels. Table 2 summarizes the air requirement, flue gas produced, and flue gas composition on the basis of One million kcal/hr useful heat output.

| **TABLE 1**: Gross calorific value & Ultimate analysis of fuels C-carbon, H-hydrogen, N-Nitrogen, S- Sulfur , M-Moisture, A- ash, O-Oxygen, in % by wt | | | | | | | | |
|---|---|---|---|---|---|---|---|---|
| Fuel | GCV Kcal/kg | C | H | N | S | M | A | O |
| Coal (typical) | 3800 | 39.9 | 2.48 | 0.67 | 0.38 | 8.0 | 42.0 | 6.76 |
| Rice husk ( dry & fresh) | 3275 | 36.67 | 4.51 | 1.25 | 0.18 | 9.44 | 15.01 | 32.88 |
| Rice straw | 2660 | 36.0 | 5.0 | 0.5 | - | 15.75 | 4.75 | 38 |
| Bagasse | 2272 | 23.5 | 3.2 | - | - | 50.0 | 1.3 | 22.0 |
| Neyveli Lignite | 2800 | 32.0 | 2.8 | - | 0.7 | 52.0 | 2.5 | 10 |
| Kutch lignite | 3800 | 38 | 2.8 | 0.5 | 2 | 36 | 10 | 10.7 |
| Groundnut shell | 4130 | 47.68 | 42.9 | 0.51 | 0.42 | 10.12 | 2.4 | 34.58 |
| Rap seed Bagda | 3350 | 34.55 | 4.22 | - | - | 6.12 | 8.63 | 46.48 |
| Deoiled bran | 3258 | 34.35 | 4.89 | 0.38 | - | 8.98 | 21.42 | 29.98 |
| Bamboo dust | 4235 | 44.31 | 4.21 | 0.77 | - | 9.86 | 6.47 | 34.38 |
| Tea spent | 4010 | 41.55 | 3.69 | - | - | 11.8 | 2.7 | 40.19 |
| Coffee spent | 1172 | 14.01 | 1.9 | 0.15 | 0.17 | 74.8 | 0.4 | 8.46 |
| Chicken droppings | 2102 | 21.25 | 1.95 | 0.62 | 0.41 | 5.5 | 42.6 | 27.58 |
| Coffee husk (parchment) | 4199 | 44.11 | 2.89 | 0.11 | - | 7.8 | 0.8 | 44.29 |
| Coffee husk (Cherry) | 3726 | 39.18 | 2.71 | 0.13 | - | 11.1 | 5.0 | 41.88 |
| Coconut fibre | 3838 | 41.34 | 4.24 | 0.21 | 0.11 | 11.9 | 3.1 | 39.04 |
| Leco | 6900 | 72.5 | 2 | 0.2 | 0.9 | 6.07 | 12.0 | 6.5 |
| Bagasse pith | 4000 | 41.08 | 5.21 | 0.34 | 0.09 | 10.19 | 6.81 | 36.28 |
| Castor seed cake | 4250 | 46.35 | 5.18 | 5.1 | 0.11 | 9.7 | 5.5 | 28.01 |
| Saw dust | 3396 | 36.92 | 4.59 | - | 0.11 | 18.22 | 7.26 | 32.9 |
| Wood shaving | 4278 | 47.2 | 5.02 | - | 0.1 | 10.6 | 0.38 | 36.6 |
| Mezda | 3760 | 42.26 | 5.19 | - | 0.22 | 10.49 | 3.05 | 38.79 |
| Coffee ground | 5009 | 49.56 | 5.92 | 2.62 | - | 2.6 | 2.09 | 36.61 |
| Char | 4109 | 43.08 | 0.79 | 0.63 | 0.41 | 5.66 | 41.44 | 7.99 |
| Dolo char | 4753 | 49.13 | 0.88 | 0.71 | 0.47 | 3.77 | 35.99 | 9.05 |
| Charcoal | 6300 | 93 | 2.5 | - | 1.5 | - | - | 3.0 |

**The values in the tables are based on the analytical reports of samples actually tested. Discrepancies may be encountered, as these values are not based on average values of several samples.

Table 3 may be used for specifying the fuels to be fired. The fuel samples need to be analyzed for fuel chemical composition, ash chemical composition & ash fusion temperature.

| **Table 3.** Fuel Specification & firing combinations | | | | | | | | | | | | |
|---|---|---|---|---|---|---|---|---|---|---|---|---|
| Specification of Solid fuels / Liquid fuels | | | | | | | | | | | | |
| Fuels | | Ultimate analysis by weight | | | | | | | GCV kcal/kg | Fuel availability | | |
| | | C | H | S | N | O | Ash | Moist | | All day yes/ No | Kg/day | |
| A | | | | | | | | | | | | |
| B | | | | | | | | | | | | |
| C | | | | | | | | | | | | |
| D | | | | | | | | | | | | |
| E | | | | | | | | | | | | |
| F | | | | | | | | | | | | |
| Specification of Gaseous fuels | | | | | | | | | | | | |
| Fuels | | Ultimate analysis by volume | | | | | | | | GCV kcal/m3 | Fuel availability | |
| | | CH4 | CnHm | N2 | O2 | CO | CO2 | H2O | H2S | | All day yes/ No | Kg/day |
| G | | | | | | | | | | | | |
| H | | | | | | | | | | | | |

| Fuel firing combination in % heat duty wise | | | | | | | | |
|---|---|---|---|---|---|---|---|---|
| | Fuel A | Fuel B | Fuel C | Fuel D | Fuel E | Fuel F | Fuel G | Fuel H |
| Combination 1 | | | | | | | | |
| Combination 2 | | | | | | | | |
| Combination 3 | | | | | | | | |

- *FUEL TYPE FIBROUS / NON-FIBROUS / LIQUID / GASEOUS*

Fossil fuels such as coal, lignite are prepared, stored in bunkers and fired in the boiler. The materials that have good flow properties are stored & fired. Fibrous materials such as Bagasse, Bagasse pith, bamboo dust, coconut fiber, wood shavings are directly fired without any intermediate storage system. Though fibrous, groundnut shell can be fired indirectly with properly designed storage bunkers. Improper bunker design leads to severe flow problems with groundnut shell. Rice husk, deoiled bran, coffee husk are stored in bunker and fired in FBC boilers. The size of the fuel is so uniform that flow problems are not encountered.

The FBC boilers are designed with under bed feeding system / over bed feeding system or with both the systems depending upon the fuel combinations & flexibility desired. In the case of multi fuels, it is possible to have metering of all fuels. Or only the main fuel can be metered and the other fuels may be designed for direct firing. See figure 1 & 2 showing the fuel feed arrangements. The table 4 compares the merits and demerits of underbed & over bed feeding systems.

**Table 4 :** General comparison between underbed & over bed feeding system- fluidized bed combustion boilers

| UNDERBED FEEDING SYSTEM | OVERBED FEEDING SYSTEM |
|---|---|
| Preferred for powdery fuels such as Coal, Lignite | Preferred For Agro fuels such as Rice husk, Groundnut shell, Bagasse, Wood chips, Saw dust. |
| Suited for fines. As the combustion will be stable even if the fines are more than 40 %. | Leads to Unstable combustion if the fines are more. |
| Start up with fines is not difficult. | Start up with fines is difficult, as the bed would not catch fire. |
| Needs minimum two months for operator training. | Needs less time as compared to underbed. |
| More compartmentalization is easier & practical to suit load turn down requirement. | Compartmentalization to more than two compartments complicates the layout of fuel handling system. |
| Power consumption is more due to PA fan. | Power consumption is less, as PA fan is not required. |
| Unburnt in the ash is less. Where less unburnt is demanded for other uses, Underbed is the only choice. | Unburnt is a function of fines in the fuel. The ash will have more unburnt. |
| Excess air required for underbed is less. Usually 20 – 25 % is sufficient to bring smoke free combustion. | Excess air required is about 60 %.For rice husk, The combustion efficiency is affected to 1.8 % due to excess air. |
| Oversize fuel / foreign material results in choking of fuel lines. This is due to failure in the screen system in the yard. Frequent oversize ingress affects interrupts the boiler operation. | Oversize fuels / foreign materials would go to the bed. More oversize materials lead to defluidization. Over size materials directly fall below the fuel feed point and form clinker. |
| Back fire in boiler does not allow flame to come to bunker. | Backfire in boiler needs to fire in bunker. Agro fuels promote bunker fires. |
| There is no settling chamber irrespective of the fuel. Hence the ash is collected at low temp zones down the flue path. | For rice husk / groundnut shell, ash settling chamber is provided to enable unburnt carbon within the furnace. The hot ash is to be removed directly from the furnace. The removal of hot ash by a feeder is difficult though not impossible. Water-cooled ash feeder is required. Hot ash discharge from furnace increases heat loss by 1 % compared to underbed feeding system. |

Figure 3 shows the arrangement followed for biogas firing arrangement followed for distilleries. The gas is fed thro the air nozzles only. This has been found to be very efficient way of burning since the gas flow may be varying. The support fuel can be increased as required. It has been found that minimum 30% solid fuel support is required for biogas. The biogas composition & GCV details are given in table 5.

**Table 5.** Bio Gas chemical composition & calorific value

| GCV, Kcal /m3 | CH 4 by vol % | H2S by vol % | CO2 by vol % |
|---|---|---|---|
| 4697.0 | 54.0 | 2.0 | 44.0 |

Very rarely 100 % oil firing along with 100 % solid fuels has been requested by a user. 60 % furnace oil firing had been given. Pressure jet burners / steam atomized burners have been used.

- *FUEL BULK DENSITY*

  - *Fuel feeder sizing*

Higher the bulk density of the fuel, the greater the volume of the feeder. A fuel feeder sized for coal will be too small for rice husk. Metering coal with a feeder designed for rice husk would be difficult. The fuel feed regulation can not be smooth. Usually separate metering feeders are given for such applications. See figure 4. Some boilers are designed with a single bunker so that the either coal or rice husk can be fired from the same bunker. In such a case the feeders are provided with multiple sprockets so that wide rpm variation can be achieved.

Underbed fuel piping is selected based on the fuel bulk density of the fuel. Table 6 shows the design criteria for different fuels for underbed feeding. Again depending on the size & no off fuel feeding lines the PA fan sizing is done.

**Table 6:** Maximum fuel carrying capacity in kg/hr per line

| Fuel | Fuel line size, nb | | |
|---|---|---|---|
| | 100 nb | 125 nb | 150 nb |
| Rice husk / DOB | 400 | 600 | 900 |
| Ground nut shell | 300 | 450 | 600 |
| Coal / lignite | 800 | 1200 | 1800 |

  - *Fuel storage bunker*

A bunker that is meant for 16 hrs storage will hold rice husk for 2 hrs only. Table 7 compares the bulk densities of certain fuels.

**Table 7.** Bulk densities of fuels, in kg/m3

| | | | | |
|---|---|---|---|---|
| Coal | 1000 | | Ground nut shell | 100 |
| Lignite | 800 | | Bagasse | 60 |
| Rice husk | 125 | | Wood shaving | 175 |
| DOB | 400 | | Coir pith | 60 |

- *Fuel storage & handling*

Depending upon the boiler size, fuel storage & reclaiming should be given sufficient thought. A single feed hopper for coal is usually sufficient. It will not be adequate for rice husk, when it comes to higher capacity boilers. Multiple hoppers will have to be planned for rice husk. This helps in matching the filling rate with emptying rate.

For Bagasse & fibrous materials, flight chain conveyor or belt conveyors are selected to convey the fuel from the yard to boiler. In this applications a horizontal run is planned to enable feeding the conveyor anywhere along the length. When it comes to regulating the fuel feed to the boiler, the return Bagasse conveyor is planned so that surplus fuel can be returned to yard.

- *Hours of operation of fuel handling system*

The fuel handling system will have to operate for all three shifts in the case of low bulk density / fibrous fuels.

➢ *FUEL SIZE*

The fuel size is the factor that decides the type of fuel handling system.

- Coal will have to be sized to minus 8 mm, whereas minus 10 mm is allowable for lignite in the case of underbed system. In the case of over bed system, minus 15 mm is recommended.
- The groundnut shell / rice husk handling system calls for pre screening as stones and other foreign materials are likely to get mixed up.
- Bagasse if received in bale form needs a debaler. Bagasse shall be in the form of loose fibers of length below 125 mm.
- Wooden logs need a shredder. Saw dust handling system needs to have a screen to limit the chip size to 25 mm & below.
- Bagasse pith can be directly fired using a flight chain conveyor system along with a pneumatic spreader at the furnace. Alternately the Bagasse pith can be mixed with the main fuel that may be coal or rice husk. The advantage is that the Bagasse pith can be fed and at uniform ratio, irrespective of the operational hours of depither. In case depither is not closer to boiler, mixing with the main fuels is the right option.

➢ *ASH MELTING POINT*

FBC furnaces are designed for bed temperatures of 800 to 900 deg C in the case of the underbed feeding system. In the case of the over bed feeding arrangement, the over bed temperature is likely to exceed 1000 deg C. For fuels which have low ash melting points, it is desirable that Combustion temperatures are kept lower. For fuels like coffee husk, 100 % firing has not been practical for its ash melting temperature is as low as 800 deg C. In the case of Co-firing with high ash fuels such as coal, rice husk, the slagging is greatly reduced. The higher the alkali contents of the ash, the lower the ash-melting temp. Hence, the percent co firing is limited by the tendency of fuels to slag.

For Kutch lignite recommended combustion temperature is 850 deg C. Only underbed feeding system has been found reliable since the bed temperature control is much better. Studded bed coils can not be used for Kutch lignite as the stud tip form as nucleus for slagging. More no of feed points is desirable for Kutch lignite, as this would reduce the risk of local high temperatures.

Ash Slagging calls for soot blowers wherever the high metal temperatures exist. In the case of convection superheater, the counter flow superheater will have more tendencies to slag deposition as compared to parallel flow Superheater. Retractable soot blowers have to be used for the superheater zone.

For Slagging fuels, the water wall furnaces are recommended. Depending upon the moisture content of the fuel a minimum portion of refractory would be required for drying the fuel.
The spacing of super heater coils / boiler bank tubes is given due consideration for slagging fuels.

In case of smaller capacity boiler shell type boilers are offered. In such cases, the water wall is adequately sized so that inlet temperature to I pass tube sheet is lower. When this is not done, ash deposition and choking have been encountered in the I pass tubes sheet.

- *ACID DEW POINT*

The acid dew point governs the design of cold end block of air preheater. The cold end preheater is made as a separate block since the tubes would fail due gas side corrosion.

In case of oil firing, air preheater is not recommended following a high combustion temperature and Nox formation. Economizer is provided for heat recovery in case of oil firing. The feed water inlet temperature should be 125 deg C to avoid cold end corrosion of economizer tubes.

- *SULFUR CONTENT IN FUEL*

Sulfur content in fuel is an important pollutant. As per the regulations the chimney height is to be maintained a minimum given as per the formula below.

$$H = 14 \text{ x } (Q)^{0.3}$$

Where,

H = height of chimney in meters
Q = Sulfur dioxide produced in kg / hr

The choice of material of construction of chimney is dependent on the acid dew point of flue gas. Concrete chimney with inner refractory lining is usually the choice when the fuel is Bagasse. Concrete chimney will be uneconomical for smaller diameter.

In the case of high sulfur fuels, limestone feeding has to be fed to the fluidized bed. This material absorbs the SO2 produced and the Sox emission comes down. The absorption reaction is as below.

$$CaCO_3 = CaO + CO_3 \text{ by dissociation}$$

$$CaO + SO_2 = CaSO_4$$

- *ASH CONTENT*

  - *Ash discharge equipment*

The ash feeders are selected for the worst fuel. The total ash produced is calculated and based on the percentage collection expected in the various collection zones, the ash discharge equipment are selected. Table 8 suggests the % ash collection rate and sizing philosophy for ash feeders for Bi drum type boiler. Bed ash removal is dependent on the size of the fuel particles and the fuel itself. For fuels like coal, bed ash cooling system shall be sized for 40 %.

**Table 8**. % Fly ash Collection at various zones

| | Boiler Bank | Economizer | Airheater | ESP field 1 | ESP field 2 | ESP field 3 |
|---|---|---|---|---|---|---|
| Actual | 10 | 10 | 10 | 40 | 20 | 10 |
| Design | 20 | 20 | 20 | 60 | 60 | 60 |

- *Fly ash collection equipment*

Depending upon the local pollution control act, 1200 /500 / 350/ 150 / 115 mg/nm3 may be the permissible dust emission in chimney. The mechanical dust collector (multi cyclone type) is offered for smaller capacity boiler. When it comes to lower limits, bag filter / venturi scrubber / Electro static precipitator. Ash chemical composition, flue gas composition, particle size distribution, flue gas temperature, water availability, effluent disposal arrangement are critical factors in selection & sizing of type pollution control equipment.

- *Ash handling system & ash silo*

The bed ash discharged from the bed is in the range of 800 to 900 deg C. Fluidized bed ash coolers are available to extract heat from the bed ash. The bed ash is negligible in the case of the Rice husk and other agro wastes. Hence for fossil fuels such as coal / lignite only the bed ash cooling system & bed ash conveying systems are planned. For fly ash, lean phase system and dense phase system are preferred as the dust nuisance is less.

- *Ash erosion*

The % ash content in the fuel and erosive ness of ash decide the flue gas velocities to be adopted. The recommended gas velocities are given in table 9.

**Table 9:** Typical design gas velocities for Various fuels

| Location | Coal | Lignite | Rice husk | Bagasse | Oil / Gas |
|---|---|---|---|---|---|
| At superheater | 8 | 10 | 8 | 10 | 25 |
| Shell flue tube entry | 18 | 18 | 18 | 18 | 30 -45 |
| Bank tubes | 8 | 10 | 8 | 12 | 25 |
| Economizer | 8 | 10 | 8 | 12 | 20 |
| Airheater | 16 | 16 | 16 | 18 | - |
| Mechanical dust collector | 15 | 15 | 11 | 12 | - |

➢ *FURNACE HEAT RELEASE RATE*

In an FBC boiler the Fluidized bed area is selected based on a fluidization velocity of 2.5 to 2.8 m/s. The free board height is based on the manufacturers' practice for a complete combustion of unburnt particles before the flue gas enters the convection bank zone. Usually 4 m is found to be

adequate for Underbed FBC system. In the case of over bed system the residence time needs to be improved. For this purpose, ash settling chamber is given in furnace.

Design of furnaces for Natural gas / Oil cum solid fuel fired boilers (all 100% firing) is more complicated. The free board furnace has to be sized for permissible heat release rate. Table 10 gives the recommended heat release rates. The combustion temperatures are much higher than the FBC furnace. Accordingly the furnace exit temperatures are higher and the superheater surfacing required is much less. Whereas, the boiler bank, economizer surfacing has to be more. Bed Superheater is required in order to obtain the required superheating when the solid fuel firing is done.

In Underbed FBC boilers, where only solid fuels are fired the Waterwall fin width can be 50 mm even for pressures up to 66 kg/cm2 g. The same fin width can not be adopted for oil firing as the heat flux & combustion temperatures are higher. The heat flux & combustion temperature govern the selection of fin width.

**Table 10 :** Recommended furnace volumetric heat loading

| | | MW /m3 | MW / m3 | Kcal / hr / m3 | Kcal/ hr / m3 |
|---|---|---|---|---|---|
| | | minimum | maximum | minimum | maximum |
| Furnace oil | Field assembled | 0.6 | 0.8 | 258000 | 344000 |
| Furnace oil | Shop assembled | 0.3 | 0.4 | 516000 | 688000 |
| Natural gas | Any | 0.3 | 0.46 | 258000 | 395600 |

- *MOISTURE CONTENT IN FUEL*

  Wet fuels would need drying before feeding into the furnace or within the furnace. Mill Bagasse has as much as 50 % moisture. The furnace Volume should be adequate for drying & release of heat. The recommended furnace volume is given by the following formula.

$$\text{Furnace volume reqd, m3} = \frac{\text{Fuel firing rate in kg/h x NCV in kcal/kg x 0.1124}}{28000}$$

Where,

NCV = (4250 – (4850*moisture content by wt in a kg of fuel))

While designing the fluidized bed for furnace for Bagasse & rice husk, the fluidized bed sizing is based on rice husk. The furnace volume will be based on the above volume. In addition the convection bank will be located a height of 7 to 8 meters from fuel feed point. Refractory lining will be required to improve the Furnace outlet temperature in order to obtain desired convection superheater outlet steam temperature. Traveling grate furnace is not the right solution for coal / Bagasse or rice husk/ Bagasse firing. Because it is not possible to obtain the steam temperature as the combustion temperature is different for the different fuels and the furnace heat absorption pattern is different between high & low moisture fuels.

For e.g., the adiabatic combustion temperature for mill Bagasse is 1079 deg C where as for rice husk this is 1400 deg C.

- *BED COILS SURFACING & EXCESS AIR.*

In under bed FBC system the bed coil surfacing is done based on the fuel to be fired. The fuel chemical composition and the volatile matter are the deciding factors. Table 11 shows a heat balance of the bed for selected fuels. The heat balance is drawn assuming recommended bed temperatures.

**Table 11:** Percentage bed duty to the heat input by fuel

| | Coal | Rice husk | Kutch Lignite |
|---|---|---|---|
| Carbon loss | 4.0 | 4.0 | 2.0 |
| Loss due to air moisture | 0.947 | 0.93 | 0.92 |
| Loss due to fuel moisture | 8.53 | 16.5 | 28.35 |
| Heat loss due to sensible heat in ash | 2.09 | 0.87 | 0.23 |
| Dry flue gas loss | 40.28 | 41.91 | 41.97 |
| Radiation loss | 5.25 | 4.83 | 4.4 |
| Total losses | 61.1 | 69.04 | 77.87 |
| % heat duty of bed coil to the fuel heat input | 38.9 | 30.96 | 22.13 |

As the figures indicate, a coal fired FBC boiler would need more bed coil surface in order to maintain the combustion temperature.

The recommended bed temperatures are given in table 12. The bed coil surfacing is based on the worst fuel, that is the one that need the least bed coil surface. For other fuels, the bed will be operated on slightly high excess air (25 % to 35 %).

**Table 12** : Recommended bed temperatures for various fuels

| Fuel | Bed temperatures, deg C | | |
|---|---|---|---|
| | Normal | Minimum | Maximum |
| Coal | 900 | 800 | 950 |
| Rice husk | 850 | 750 | 900 |
| Kutch lignite | 850 | 750 | 850 |
| Neyveli lignite | 850 | 750 | 900 |
| Char / Dolochar | 900 | 800 | 950 |
| Bagasse pith | 900 | 750 | 900 |
| Ground nut shell | 850 | 750 | 850 |
| De oiled bran | 850 | 750 | 850 |
| Coffee husk | 750 | 650 | 750 |

- *VOLATILE MATTER IN FUEL*

The fuels, which contain more volatile matter, tend to burn above the bed. In such circumstances the coil surfacing is reduced accounting certain % heat release above the bed. This is to an extent of 15 % to 25 %.

- *BOILER DESIGN PARAMETERS*

  The boiler configurations can not be a standard one when it comes to multifuels. Further, the boiler design parameters such as Steam pressure, Steam temperature, steaming capacity, load down desired, fuel flexibility range.

## *CONCLUSION*

The FBC boilers have been able to perform to the expectations of customer in terms of fuel flexibility, turn down, faster load response, best efficiency. Several boilers are in operation ranging from 6 TPH to 100 TPH with many fuels. A through understanding of fuel characteristics before design will help the designer to offer the best reliable & flexible Boiler.

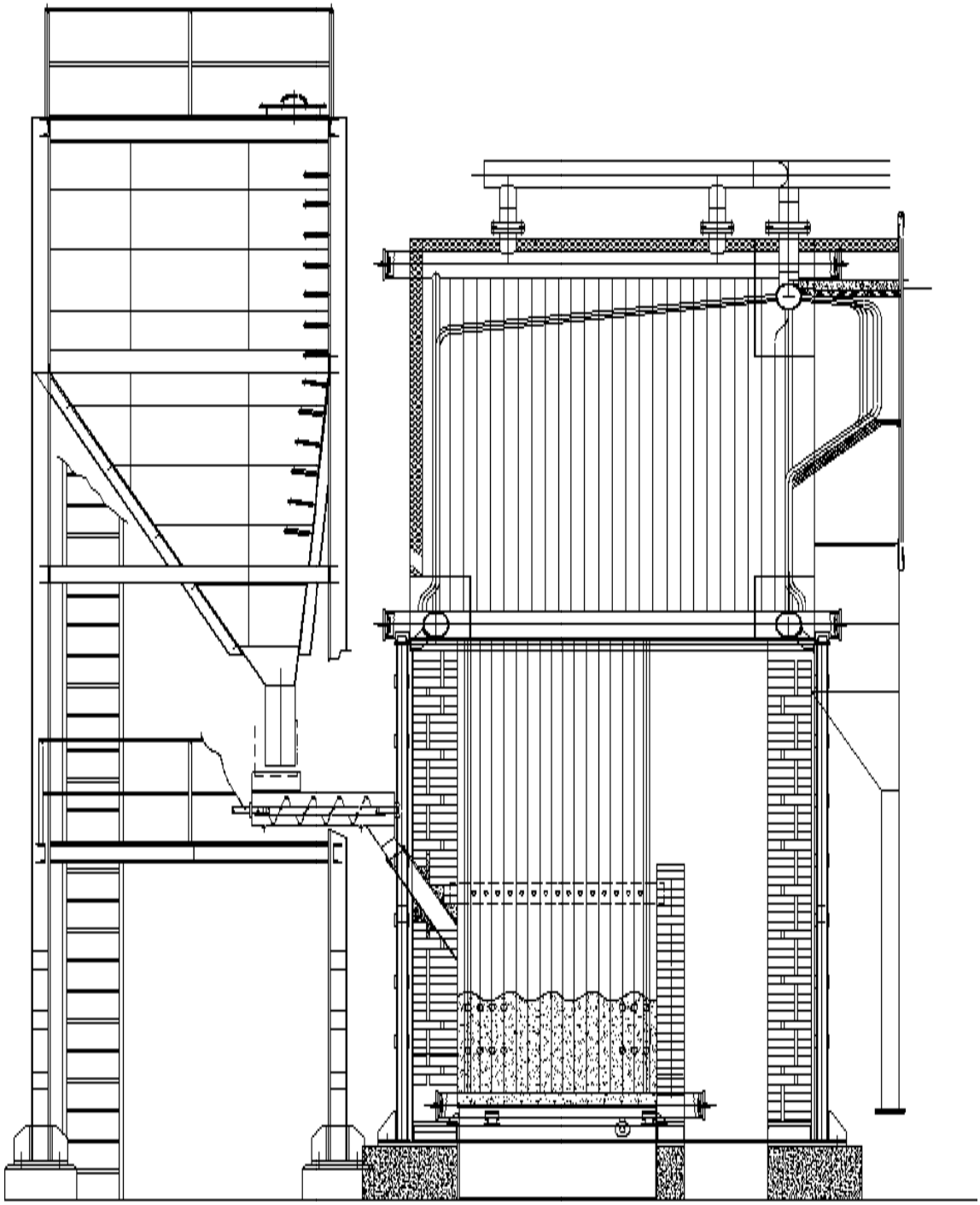

FIGURE 1:  OVERBED FUEL FEEDING ARRANGEMENT

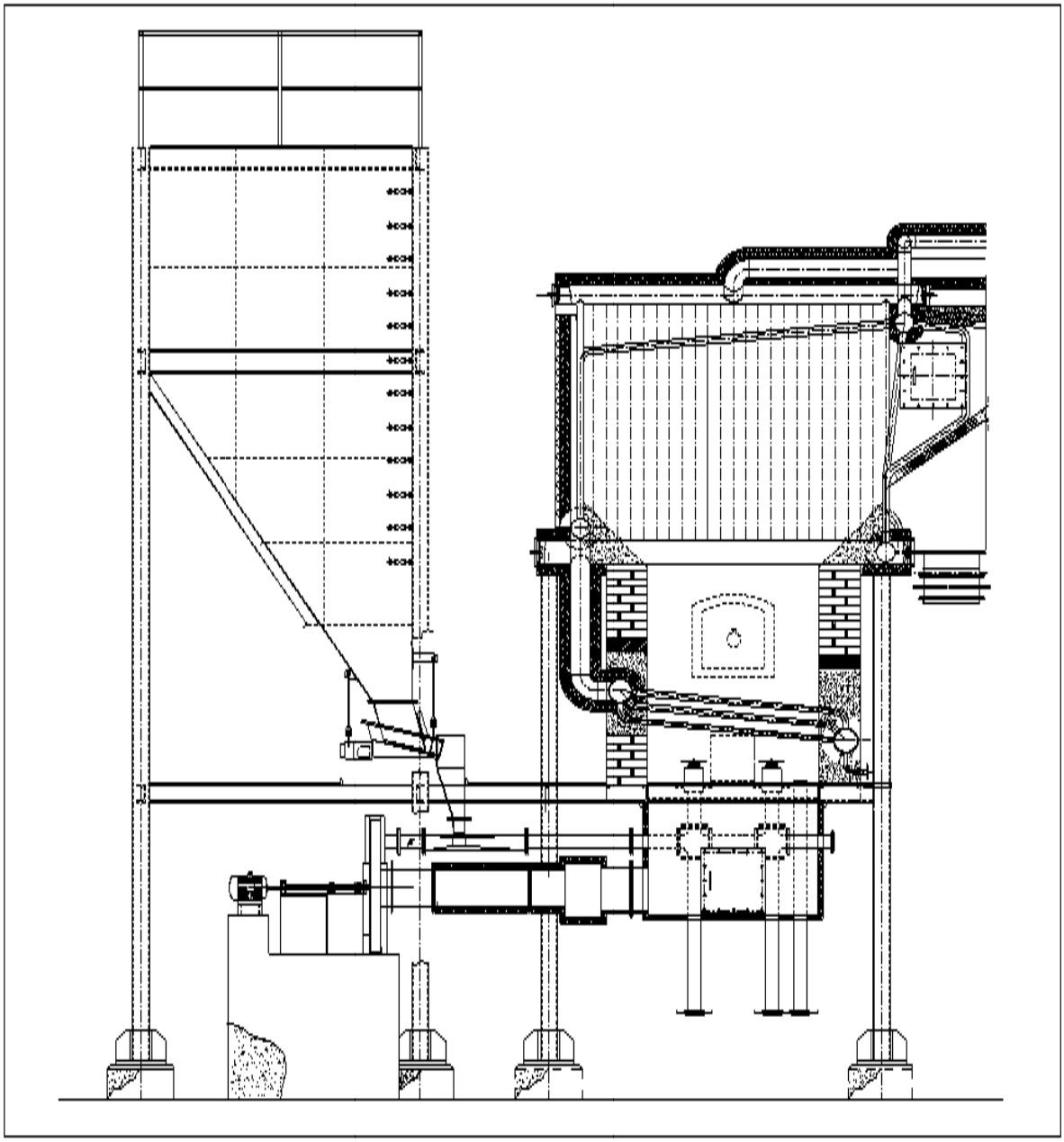

FIGURE 2. UNDERBED FEEDING ARRANGEMENT IN FBC BOILERS

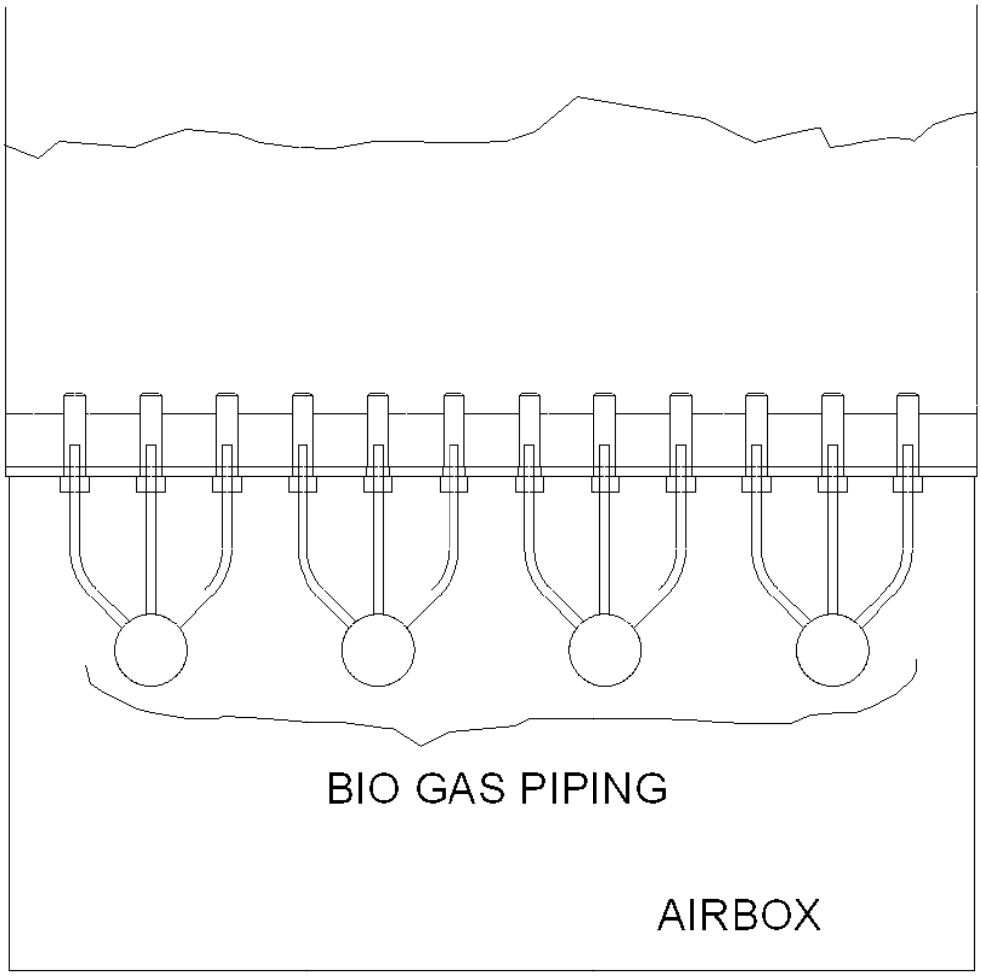


FIGURE 3. BIO GAS FEEDING ARRANGEMENT IN UNDERBED FBC BOILERS

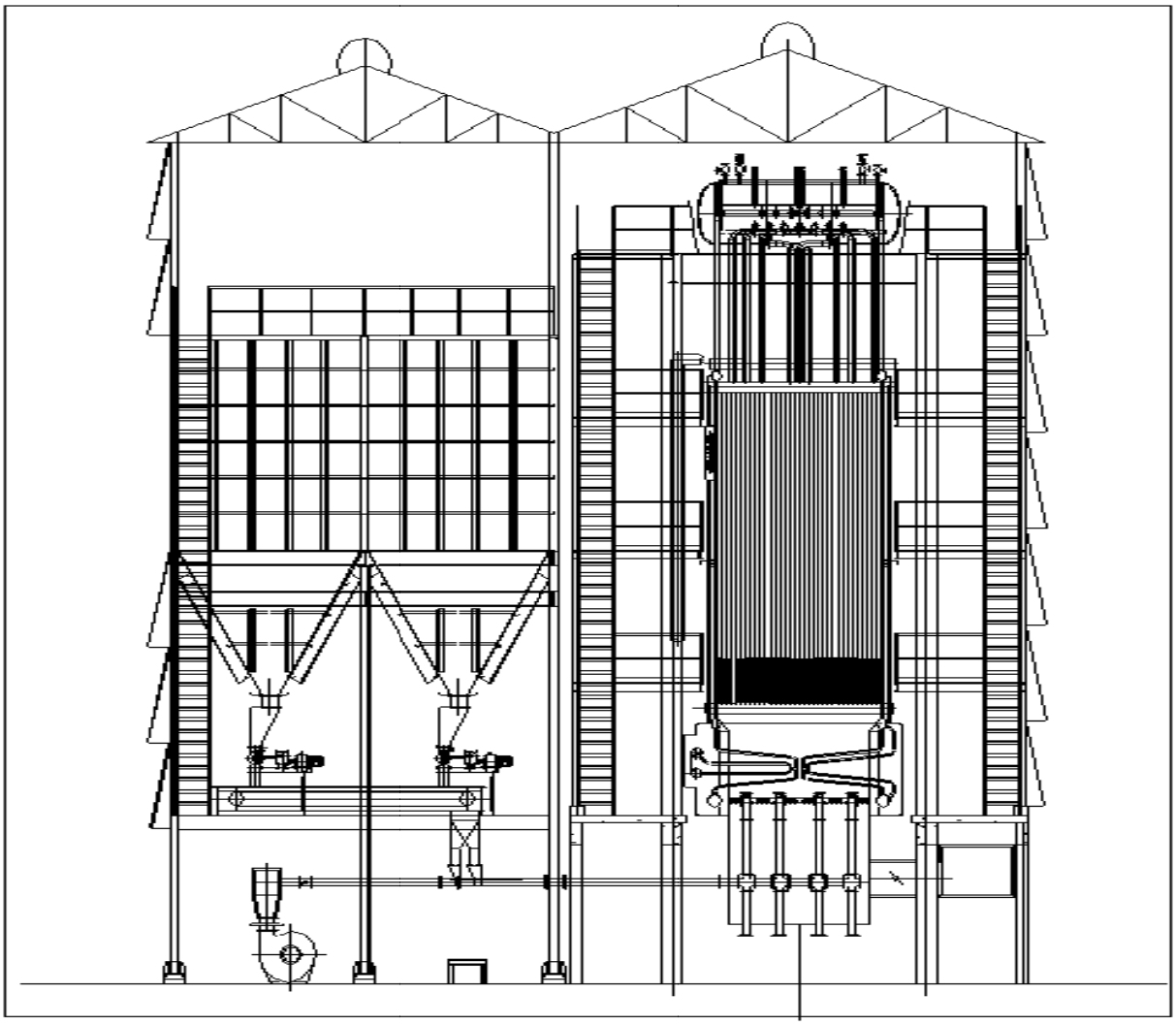

FIGURE 4.  MUILT FUEL FED UNDERBED FBC BOILER WITH FUEL METERING

**ECONOMISER FAILURE IN A HIGH PRESSURE BOILER**

Photo 1- Tube exhibiting deposits

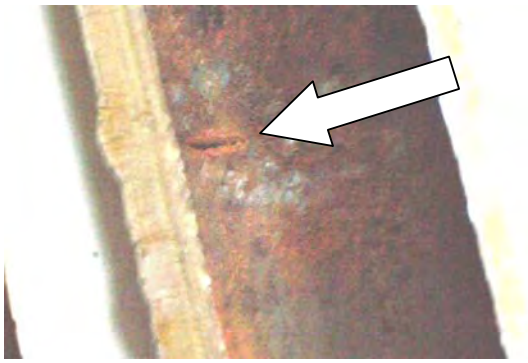

Photo 2- Failed portion from inside

I had been to a sugar mill last month on an assignment for boiler performance improvement. During the discussion the plant manager mentioned about the economizer tube failures due to external corrosion near support. I reacted that we can resort to washing if the left over ash is leading to corrosion during off season. The plant manager confirmed that the economizer was being washed since two seasons. He was smart in preserving the failed tube.

Seeing the tube I requested to have a longitudinal cut of the tube, so that we could see the inside of the tube. It was an internal corrosion at the weld. It appearance of inside of the tubes confirmed that is a deposit induced corrosion. The photos above show what I stated here. I probed into the reasons possible for pre-boiler system corrosion. My queries and the answers were as below-

| *Query:* | : | *Answer:* |
|---|---|---|
| Is the condensate pH low? | : | No. The pH is always above 8.5. |
| Is the condensate return line to feed water tank made of SS material? | : | Very much. |
| Do you have a DM plant for make up? What is the pH? | : | We have a DM plant. But before this season we had added a mixed bed and thus the pH is 6.5 to 7. |
| What is the DM water storage tank material? | : | The tank is MS and rubber lined in sides. |
| What about the roof? Is it rubber lined? | : | It is not. |
| Please check the condition of roof. It may corrode due to acidic vapor. | : | During next shut we shall inspect. |
| What is the material used for make up water line? | : | It is Stainless steel. |
| Where is the make up going to? | : | It is to the feed water tank. Not to the Deaerator. |
| Where do you correct the pH? Is it in the feed water tank or in Deaerator storage tank? | : | In the Deaerator we dose ammonia to correct the pH. |
| Please correct the pH at Feed water tank or preferably at DM plant outlet itself. Please inspect the Feed water tank for corrosion products in the next shut. | : | We will take care. We even used DM water without raising pH in the beginning of the season due to limitation in dosing pump capacity. |

Why the failure should take place at the weld? The loose corrosion product which peeled off due to low pH / O2 travels and halts at locations where surface irregularities are available. This is the site for corrosion where an electrode cell is formed.

***WHAT HAPPENS WHEN THE PH WAS LOW?***

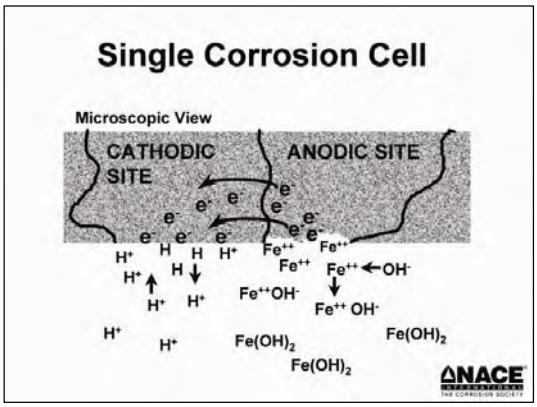


The $H^{+}$ ions in water are more when pH is low. The hydrogen ions are ready to acquire electrons from metal. Hence the Fe++ ions break away from the Fe-FeC structure of steel. The figure by the side explains what happens when H+ ions are available. The iron hydroxide peels off and gets transported to other locations.

***WHAT HAPPENS WHEN O2 IS AVAILABLE?***

In the presence of oxygen, which is generally available in make up water tank, rust is formed. Rust is the common name for a very common compound, iron oxide. Iron oxide, the chemical Fe2O3, is common because iron combines very readily with oxygen -- so readily, in fact, that pure iron is only rarely found in nature.

Iron (or steel) rusting is an example of corrosion -- an electrochemical process involving an anode (a piece of metal that readily gives up electrons), an electrolyte (a liquid that helps electrons move) and a cathode (a piece of metal that readily accepts electrons). When a piece of metal corrodes, the electrolyte helps provide oxygen to the anode. As oxygen combines with the metal, electrons are liberated. When they flow through the electrolyte to the cathode, the metal of the anode disappears, swept away by the electrical flow or converted into metal cations in a form such as rust.

For iron to become iron oxide, three things are required: iron, water and oxygen. Here's what happens when the three get together:

When a drop of water hits an iron object, two things begin to happen almost immediately. First, the water, a good electrolyte, combines with carbon dioxide in the air to form a weak carbonic acid, an even better electrolyte. As the acid is formed and the iron dissolved, some of the water will begin to break down into its component pieces -- hydrogen and oxygen. The free oxygen and dissolved iron bond into iron oxide, in the process freeing electrons. The electrons liberated from the anode portion of the iron flow to the cathode, which may be a piece of a metal less electrically reactive than iron, or another point on the piece of iron itself.

At anode, $Fe \longrightarrow Fe^{++} + 2e^{-}$
At cathode, $\frac{1}{2} O2 + H_2O + 2e^{-} \longrightarrow 2 OH^{-}$
Overall, $Fe^{++} + 2OH^{-} \longrightarrow Fe(OH)_2$

***WHAT HAPPENS AFTER THE CORROSION PRODUCTS ENTER THE BOILER?***

It can damage the boiler easily with under deposit corrosion. The failure mechanism can be Oxygen pitting / Hydrogen embrittlement / phosphate attack.

**Oxygen pitting** is typically broad and shallow and it leads to pinhole leak. Sometimes the covering deposit may still remain at the failure site.
**Hydrogen damage** leads to inter granular cracking of metal. This can happen only in very low pH condition following heat as well. The deposits prevent the H2 leaving to water side. Instead it travels through grains. It picks up carbon and forms CH4- methane and causes fissures of metal.

**Phosphate damage** occurs beneath deposits when the water contains phosphates. Locally OH- ions concentrate beneath deposits. The metal is pulled out in the form of $Fe(OH)_2$.

***WHAT IS TO BE DONE NOW TO GET RID OF DEPOSITS?***

Clean the tubes and keep it clean. It is a tough job. One has to do acid cleaning followed by passivation to get rid of the deposits and establish the uniform magnetite layer, Fe3O4.

---

## CIRCULATION FAILURE IN A BOILER

What it is presented here might be a happening in your boiler too! It has been more than 11 years the problem was not solved by the well known Boiler Company based at Pune. The Client was hesitant in referring the mystery to me. The client explained that the water level keep vanishing from the boiler very often. The problem was solved in a single visit. The problem & the solution are presented below.

### *THE PROBLEM:*

There are two 8 TPH boilers in this Plant. The boiler no 1 is three pass shell type oil cum biogas fired boiler, supplied by a Baroda based company. When the plant capacity was increased, the client installed another 8 TPH oil cum gas fired boiler from Pune based company. The new boiler is a three-pass shell tube boiler with a separate steam drum. The boiler is illustrated in figure no1. There are six down comers feeding the water from the steam drum. The steam generated enters the steam drum via three risers. The boiler Operating pressure is 14 kg/cm2g.

The plant steam load is steady and the two boilers share the load. The burners were provided with modulation arrangements initially. Presently the firing rate is set manually by the operator. However, the high-pressure trips are in action. The boiler will restart automatically on low fire. At times the high pressure tripping and restarting were proper. At times, when the boiler trips on high pressure there will be low water level occurrence too. The water in the gauge glass vanishes. It has happened more than 15 times in day. The boiler would not restart immediately, as the low water level interlock does not permit the restarting. The steam pressure in the plant header would come down to 5 kg/cm2g. Once the water level is restored in boiler no2, the firing would commence and the header steam pressure comes back to normal. The plant has been suffering due to low steam pressure for many years.

The water level vanishing from gauge glass was something unusual. This was not happening in boiler no1, which is a shell type boiler. The Client had experienced the problem only year later after the boiler was installed. After which the client had taken up with the supplier, who had struggled nearly for a year and the problem remained.

### *THE SOLUTION:*

First I suspected the NRV of boiler no 2. Client explained they had removed the NRV flap and seen. I checked the pump capacity. If it were very much oversized, the down comers would not be getting sub-cooled water for circulation (due to long idle time of pump). Further, the load was more than 5 TPH per boiler. The water level vanishing problem started after a year since the boiler was installed. The change was that the load had gone up. Then I doubted the adequacy of the down comers and risers. The circulation calculation proved that the boiler should work even at full load.
During the visit the boiler was in shut down condition and hence I requested the client to open the steam drum manhole of the boiler no 2. There was no proper internal arrangement for effective circulation. There is no arrangement to separate down comers and risers sections. The risers and down comers were located very close. The steam mixture exiting from the riser would enter the down comers. Thus there will not be any circulation. The water in Bottom shell and in steam drum would together swell and produce the steam. Due to restriction for cold water to enter the bottom shell, the steam ratio in the boiler water would be high. The apparent water level would be very high under normal condition. When the boiler trips on high water level, the heat input is stopped. Hence the boiler water would shrink and cause low water level.

I suggested the modifications as in figure 3. Three separate riser boxes were added so that the rising steam- water mixture would pass through the box. This helps in reducing the resistance faced earlier. The feed water distributor is added so that the down comers get sub-cooled water. The client carried out the modifications and then reported the problem is solved.

***CONCLUSION***

Boilers without proper circulation can lead to tube failures on starvation. This was a case the starvation was not there, as it was a shell type boiler with a float switch tripping the boiler on low water level. Clients who have the same type of boiler installed should be experiencing the problem.

---

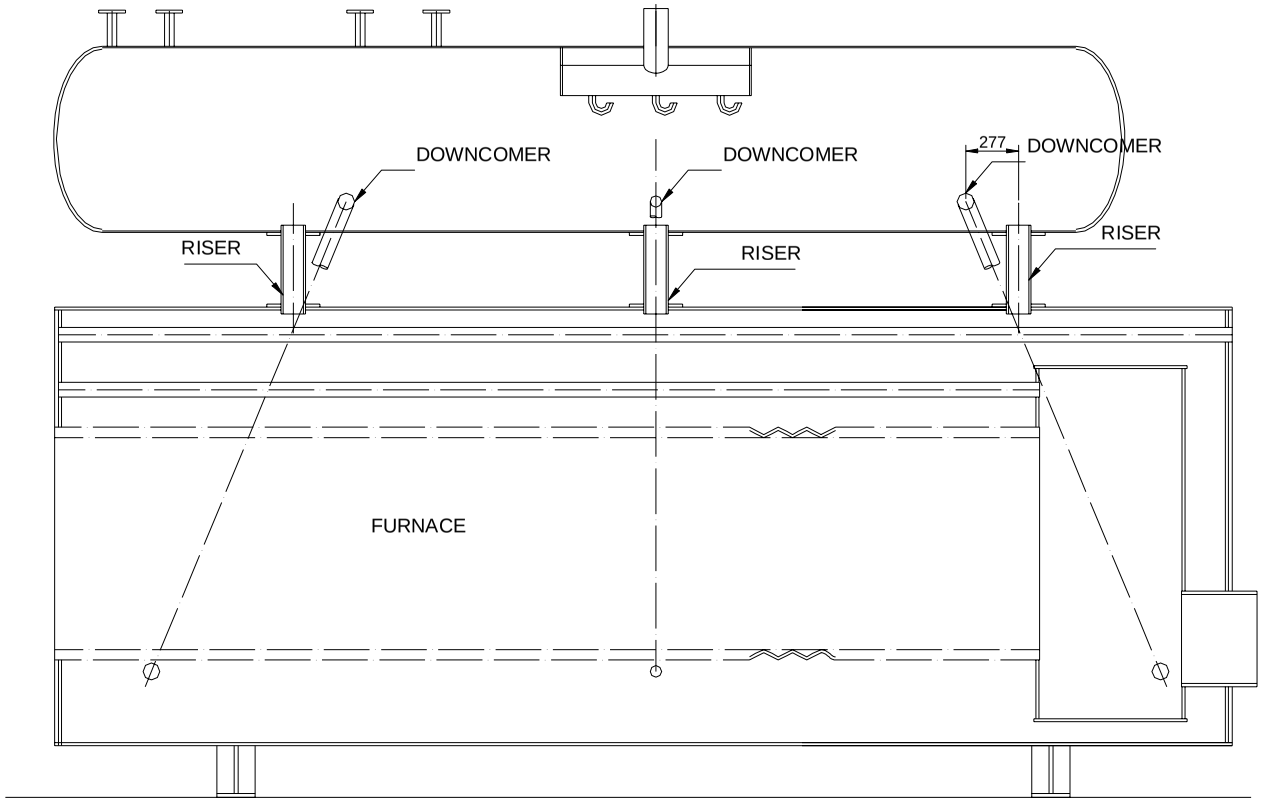


FIGURE 1A: BOILER ELEVATION VIEW

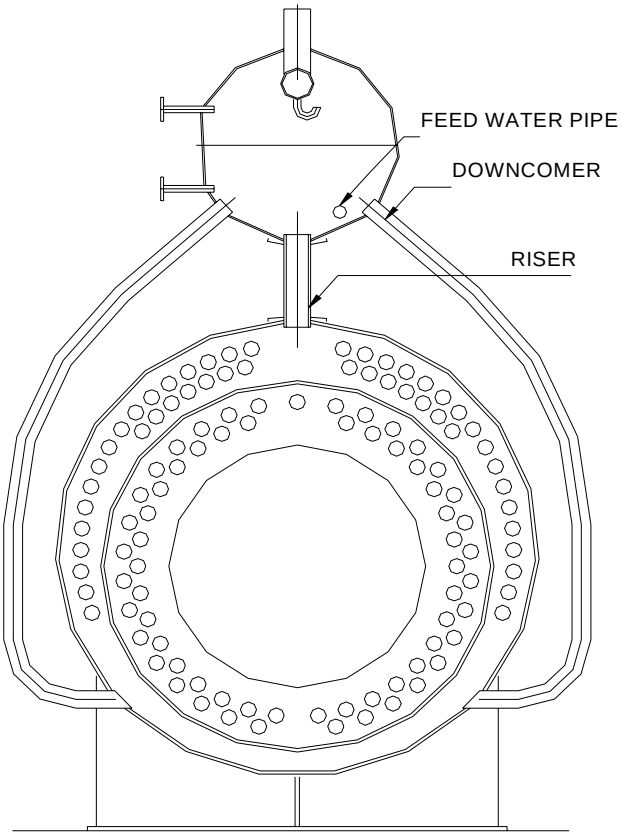


FIGURE 1B: BOILER SECTIONAL VIEW

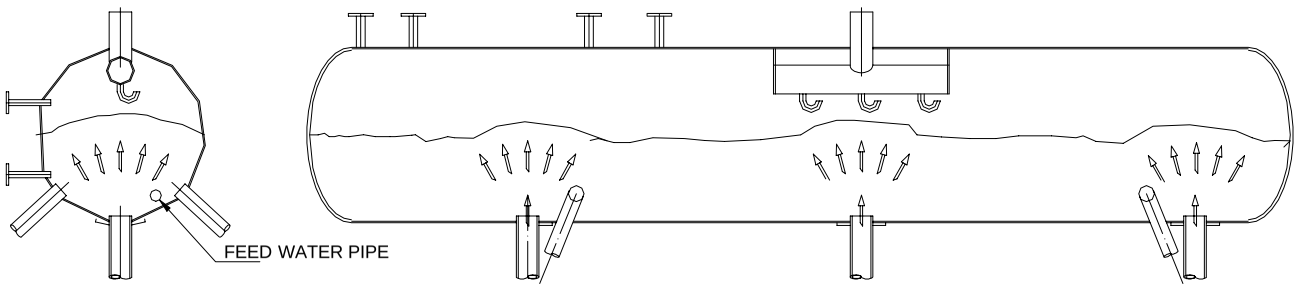


FIGURE 2 : EXISTING DRUM INTERNAL ARRANGEMENT

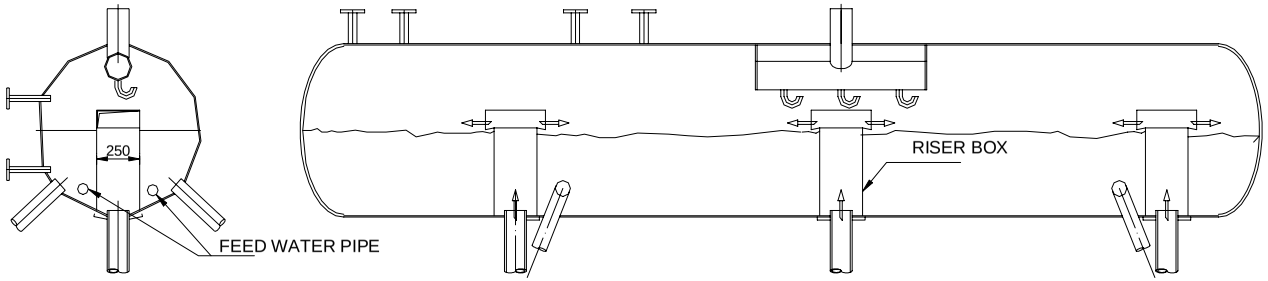


FIGURE 3 : MODIFIED DRUM INTERNAL ARRANGEMENT

## DOSE THE RIGHT AMOUNT OF CHEMICALS

Recently I had come across a case of erratic chemical dosing and boiler water pH dipping below 7.5. It can happen on many occasions.

1. When we base blow down on silica in steam, we may not be able to make up the phosphate level suitably.
2. When we try intermittent blow down, there is a heavy drain of boiler water & phosphate. We will not be able to make up for the drained phosphate with regular dosage rates of chemicals.
3. During start up and during very high load variations, chemical make up may not be sufficient.
4. When there is a time lag between analysis and dosage setting, the chemical level would vary heavily.
5. When the Deaerator water temperature is low, the boiler water pH may get upset.
6. When the condensate contamination is possible, then again we may not able to main boiler water chemistry.

When there are several reasons for the boiler water chemistry upset, we need to know how much we need to dose to bring back normalcy. We need to know the fundamentals of chemical dosing calculations. The calculation sheet given in this paper briefs how to calculate the chemical requirement. Instead of looking at the water sample results and then correcting the dosage we can decide how much is to be dosed. If the chemical dosing pump is a limitation, then % dilution can be changed for some time to bring back to normalcy. This calculation is for the boilers where the basic chemicals are used. The calculations will however be similar for proprietary chemical as well. Knowing the water volume in boiler is necessary to decide the dump dosage of chemical during upsets.

## *WATCH THE EFFECTIVENESS OF CHEMICAL DOSING!*

Many boiler users leave the water chemistry management to chemical supplier. The dosage practices are decided by the chemical suppliers. But then how to ensure that the chemicals are protecting the boiler? The best way is to inspect the wetted surfaces of the boiler. In Shell type boiler it is rather easy to see the tubes for scale or pitting. But in water tube boiler, the steam drum only speaks. The best way is to open the steam drum and take a wipe of the drum internal surface with your palm. Generally the water tube boiler is fed with well treated water. Hence scale related problems are not experienced. However the corrosion of economizer / boiler could be a serious problem. The presence of loose reddish powder indicates the boiler is corroding. Presence of grey powder indicates the economizer / pre-boiler system corrosion.

---

# CASE STUDIES ON BOILER TUBE EROSION

## *INTRODUCTION*

Erosion is associated with solid fuel fired boilers. The cause can be defective design, defective erection, improper operation & improper maintenance. Remedies could be available for many cases. This paper discusses some case studies which were diagnosed by author of this paper.

## *CAUSES ATTRIBUTED TO DESIGN*

Solid fuels depending on the amount of ash & type of ash constituents can cause erosion. There can be numerable causes under this heading. To name a few,

1. *Design with high gas velocities.*

Solid fuels such as coal, rice husk can erode the boiler tubes due to their ash constituents. Using higher gas velocities are found to erode the flue tubes in shell type boiler. Tubes are found to erode within a distance of 150 mm from the tube sheet. The usual protection system for this is the sacrificial tube ferrules. The tube ferrules must fit properly in the tube. The nitrided ferrules are found to last longer as compared to ordinary ferrules. See figure 1.

In water tube boilers, the bank can erode due to high impingement velocity / high gas velocity within the tube bank. When impingement erosion is prevalent, the remedy can be in two ways. One way is to replace the tubes periodically. Another remedy is to again use sacrificial shields. The shields are to be replaced regularly. In many cases it is not advisable to use the sacrificial shields. The shields may get distorted due to overheating and cause more complications.

When the design gas velocity is high, the tube banks erode haphazardly within the bank. See figure 2. Instead of attending to tube failures, remedial measure should be taken to decrease the gas velocity. This can be possible in some cases. Where it is not possible to alter the pitch of the tubes, tubes are surface treated for longer life.

2. *Design without considering normal dust flow pattern expected within the tube bank*

A tube bank is always with bends & straight lengths. It is natural to have to more gas / ash flow between the casing and the bends. During the fabrication of coils it is not practical to ensure all the coils are made to exact length. Preferential gas flow along the bends is unavoidable. Hence gas baffles are placed above & at appropriate places within the bank to control this. See figure 4.

Wherever the tubes penetrate through the waterwall/ steam cooled wall / steel casing, the tubes are susceptible for erosion due to preferential ash flow along the wall. When the free fall of ash is high the erosion rate is high. Sleeves are to be provided in this area. See figure 5. Figure 6 shows the common failure encountered if tube sleeve is not provided.

3. *Design without considering the preferential gas flow upstream / downstream of the tube bank*

In shell type boilers, the preferential gas flow occurs when the gas turning takes place. Inadequate space in the gas reversal chamber for the proper gas turning results in tube failures preferentially. It may be possible to modify the gas reversal chamber in many cases. See figure 3.

In water tube boilers, the superheater / economiser banks may be positioned either vertically or horizontally inside the waterwall / Steam cooled wall / steel casing. We may have tube banks / gas

baffles / gas ducts in upstream / downstream of the tube banks. They may cause certain erosion pattern on tube banks. See figure 8-11.

- Tube banks ahead can direct the ash laden gas to preferential locations
- Hanger tubes can direct the ash laden gas to preferential locations.
- Sloped panels / flat ducts can direct the ash to a particular zone of the tube bank.
- Ducts with sharp turns can through the dust to outer portion of the bends
- Improper duct orientation can cause biased gas flow

The remedies include periodical replacement of tubes, alteration of gas ducts. This will involve cold flow studies / CFD analysis. Shields can be used, provided the gas temperature does not distort them.

4. *Design without provision for controlling the preferential flow*

In water tube boilers, tube banks have to be positioned in an economical way to optimizing the space requirement. By providing adequate space for flow stabilization, the preferential erosion can be avoided. Sometimes it becomes necessary to place flow dividers ahead of the bank to ensure the gas is distributed uniformly over the bank. See figure 12.

5. *Design with narrow clearance between tubes*

Adopting very closely pitched tubes is not welcome for solid fuel fired boilers. Narrow clearances (20 to 30 mm) are not possible to maintain in actual case, though in drawing it looks nice. Clearances come down during erection / operation at site for various reasons such as

- Bow in tube length as received from tube manufacturer
- Bow in tube length caused by transport / erection procedure
- Fuel ash deposition brings down the tube to tube clearances.
- Improper support system ( welded supports )
- Thermal expansion bring down the clearances
- Staggered pitch with narrow clearance makes the tube erode faster than the inline tube arrangement. See figure 7.

It is always preferable to use a minimum of 40 mm clearance for fouling fuels.

6. *Design without proper lateral spacers to maintain the longitudinal / transverse pitch of tubes*

Tube banks have to be provided with adequate spacer / hanger to ensure pitch is uniform & tube leaning out is avoided. There are cases wherein only two supports / spacers are envisaged for long coils. A coil assembly with smaller diameter tubes needs more spacers than with large diameter tubes. Spacers are required to maintain the pitch between the tube assemblies as well.

7. *Design with possibilities for impingement erosion*

Generally there may be pitch change between the two tube banks. Screen tubes may be placed ahead of boiler bank / SH / Economiser banks. If enough space is not provided, we may experience impingement erosion. Instead of attempting to protect with shields, it is preferable to replace the tubes in a scheduled manner. See figure 11. It may be possible to rectify the defect in some cases.

8. *Failure to provide the sacrificial tube shields near soot blowers*

Sacrificial shields are to be provided for the tubes that are in proximity to the tubes near soot blowers.

Designers should place the tubes at an optimum distance away from the soot blower.

9. *Improper design of flow dividers*

Improperly designed flow dividers some times cause more havoc than the one without it. Depending on the thickness survey / erosion / polishing pattern, the design of flow dividers would call for a change.

*10. Failure to provide proper sealbox at places where the tubes enter inside the gas path*

Seal boxes are required wherever the tubes enter the flue path. The compromise here leads to erosion of tubes due to air ingress surrounding the tubes. When the tubes are hung from the roof panel, the air ingress around the tubes can lead to erosion of tubes. Many boiler design / operating engineers think that covering the openings with refractory is a solution. It is not a solution, as the refractory cracks from the steel support on thermal expansion.

***CAUSES ATTRIBUTED TO ERECTION***

1. *Improper erection methods resulting in irregular pitching of tube banks*

Tube banks are to be erected ensuring the design pitches are achieved while erecting the boiler tube banks. Using gauges while fit up & welding would ensure the clearances are maintained as per design. I have presented a case of failure due to this aspect.

2. *Improper / incomplete erection of protective shields / gas baffle*

Failure to erect the gas baffles is a common problem due to stringent erection schedule imposed in the project stage. Failure to overlap the shields is a common problem seen.

3. *Incomplete erection of sealbox*

The drawing may specify that the sealbox is to be erected with seal welding. Many engineers fail to read the drawing / fail to ensure the detail is carried out at site. The failure case is dealt in case study section.

***CAUSES ATTRIBUTED TO OPERATION***

1. *Operation of the boiler beyond the design parameters*

The boiler auxiliaries may be designed with certain margin for the various inferior fuels specified at the design stage. It does not mean that the full capacity of the auxiliaries can be used up for generating more steam from the boiler. Many times this can cause high rate of erosion.

2. *Operation of the boiler without understanding the fuel characteristics / Operation of the boiler with fuels not designed for*

Of late there is acute shortage of reliable fuel supply. Various grades of coals are imported from various countries. Operating engineers are left with no option. There are cases where the $Fe_2O_3$ in fuel ash is high enough to cause severe slagging of FBC boiler bed tubes / radiant SH / final SH tubes. The slagged ash / fouled ash choke up the flue path causing erosion of the tubes both in coils & in the waterwall / steam cooled wall. Operating engineers need to understand the effect of various ash constituents with respect to the boiler in hand. Simply firing all types of coal / other fuels would

damage the boiler tubes.

## *CAUSES ATTRIBUTED TO MAINTENANCE*

1. *Failure to ensure the design pitching is maintained during tube replacement*

Making use of gauges / fixtures can avoid this mistake. A small review needs to be done with the repairer on this aspect. Simply entrusting the work to even an experienced contractor is not correct. The quality levels demanded at the first supply should be demanded at every repair as well. A review of erection procedure can bring out the proper way to ensure perfection.

2. *Failure to observe the pattern of erosion and to take remedial advice from manufacturer.*

Appraising the manufacturer by means of photographs, sketches and operational data can lead to generation of a better design for the present case & future cases. Only in some exceptional cases, the erosion is to be taken as part of boiler life

3. *Failure to fit the gas baffles & tube shields / sealing arrangement after the tube replacement*

Unless & until the original design drawing is referred this may not be known to many new comers in the boiler maintenance.

4. *Decision to retain the distorted / plugged coils within the flue path.*

It has become a practice to retain the distorted coils / plugged coils in the flue path. This is not a good practice. Many times it is seen that the distorted coils offer sites for ash accumulations and cause the tube erosion.

## *CASE STUDIES*

Numerous cases have been seen in the past and some of them have been highlighted at the end of the paper.

## *CONCLUSION*

The boiler erosion problems have to be addressed instead of taking it as if it is an incorrigible defect. Some of the defects can be corrected by the mutual involvement of the design engineers & operating engineers by design modification. Adopting certain quality checks during repair can ensure better plant availability.

FIGURES

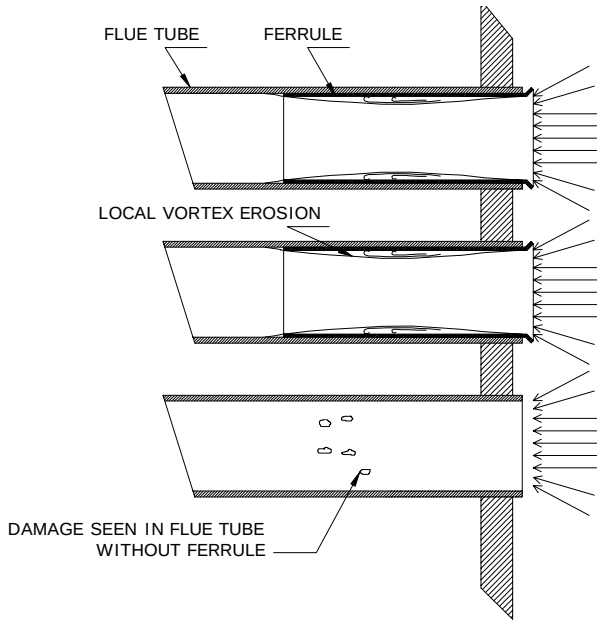


FIG 1:FLUE TUBE EROSION IN SHELL TYPE BOILER

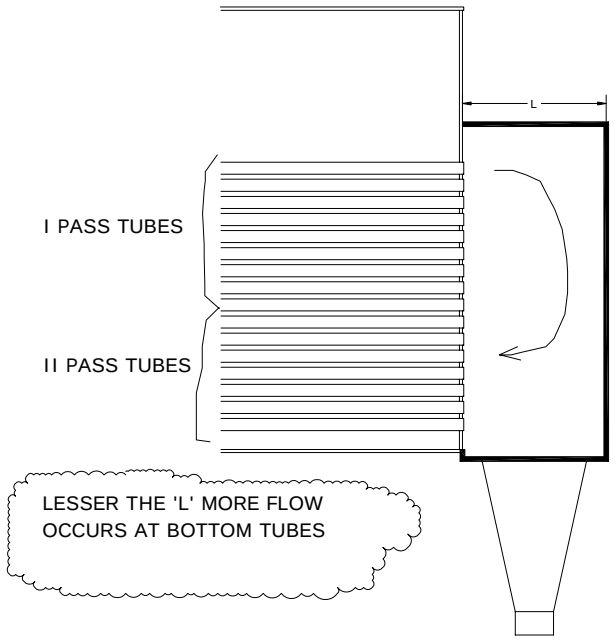


FIG 3: L- DECIDES THE EROSION IN FLUE TUBES

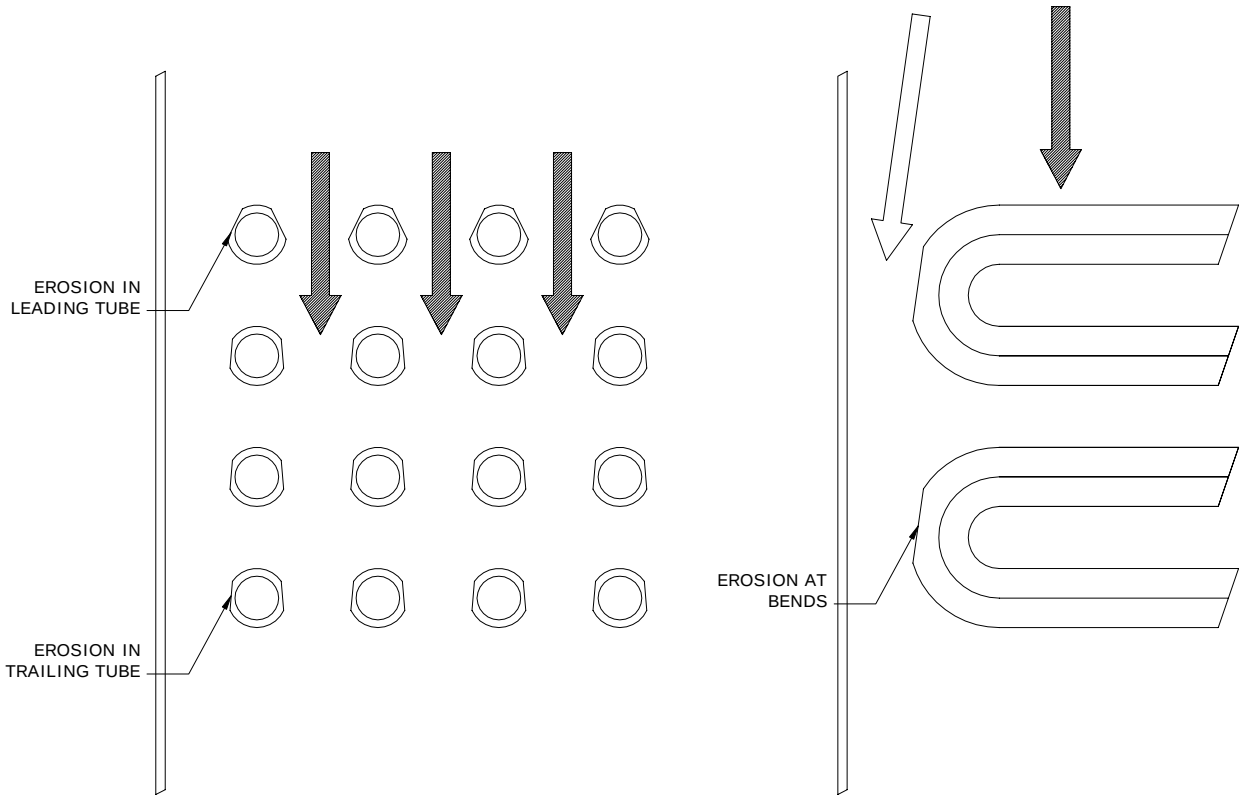


FIG 2: TUBE EROSION WHEN GAS VELOCITY IS HIGHER

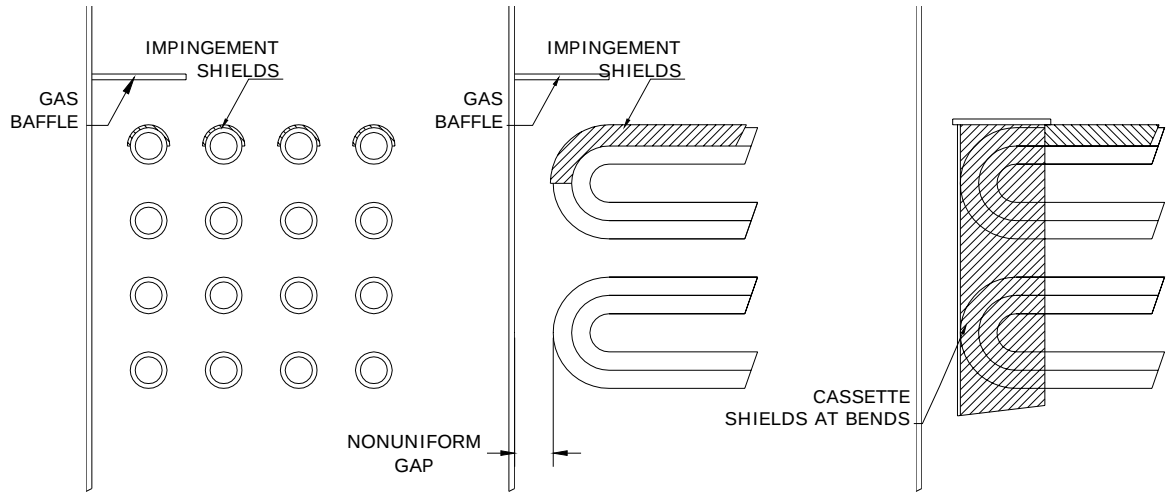


FIG 4: SOME WAYS TO PREVENT PREFERENTIAL GAS FLOW & PROTECTION OF BENDS

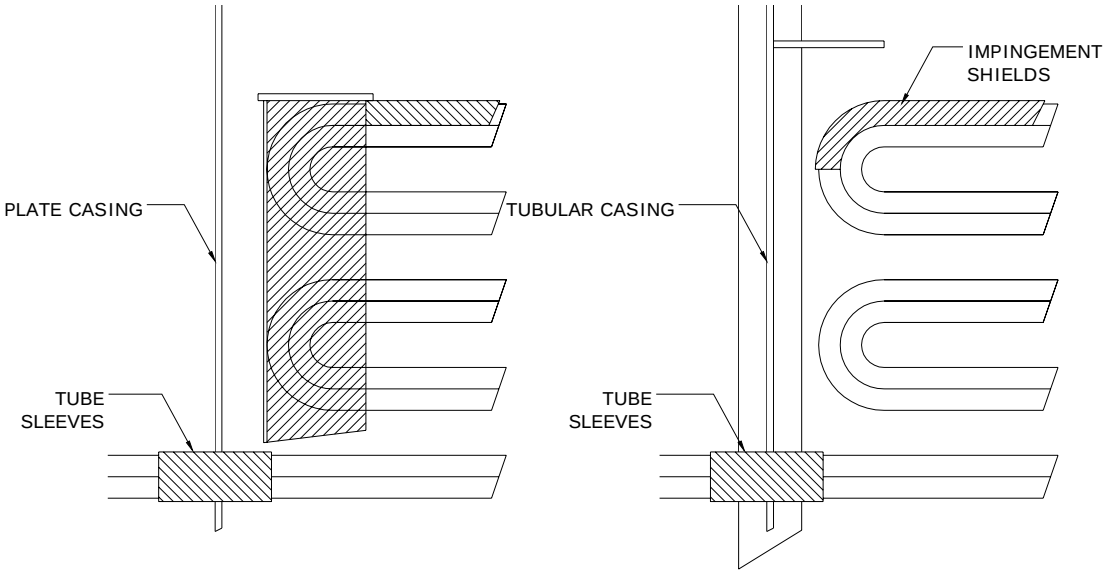


FIG 5: SLEEVE PROTECTION FOR TUBES AT PENETRATIONS

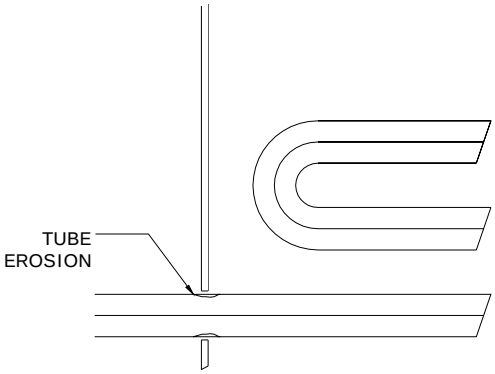


FIG 6: EROSION OF TUBES AT PENETRATIONS SEEN IN UNCLOSED SEAL BOXES & CASES W/O SLEEVE TUBES

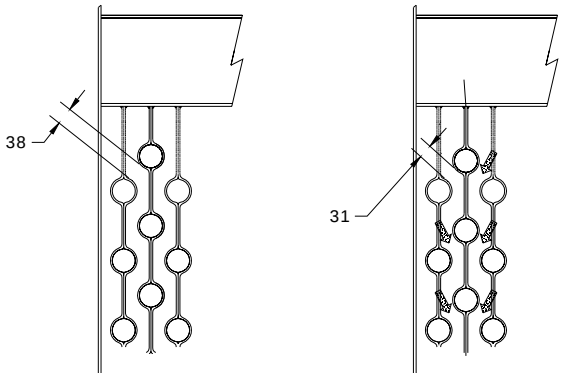


FIG 7: STAGGERED PITCH WITH WELDED SUPPORTS - EFFECT OF PITCH TO VELOCITY

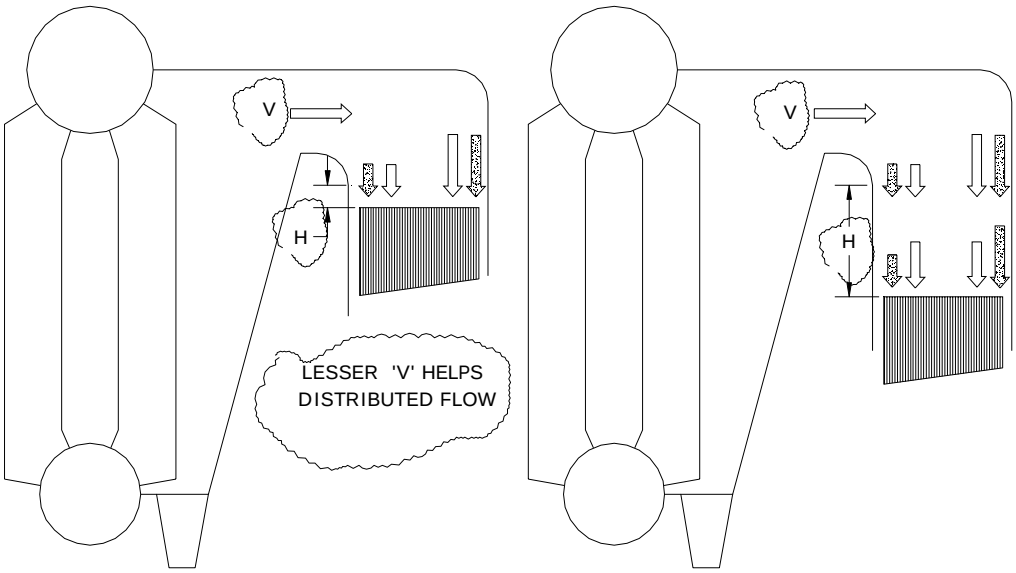


FIG 8 : H-DIMENSION THAT DECIDES EROSION PATTERN

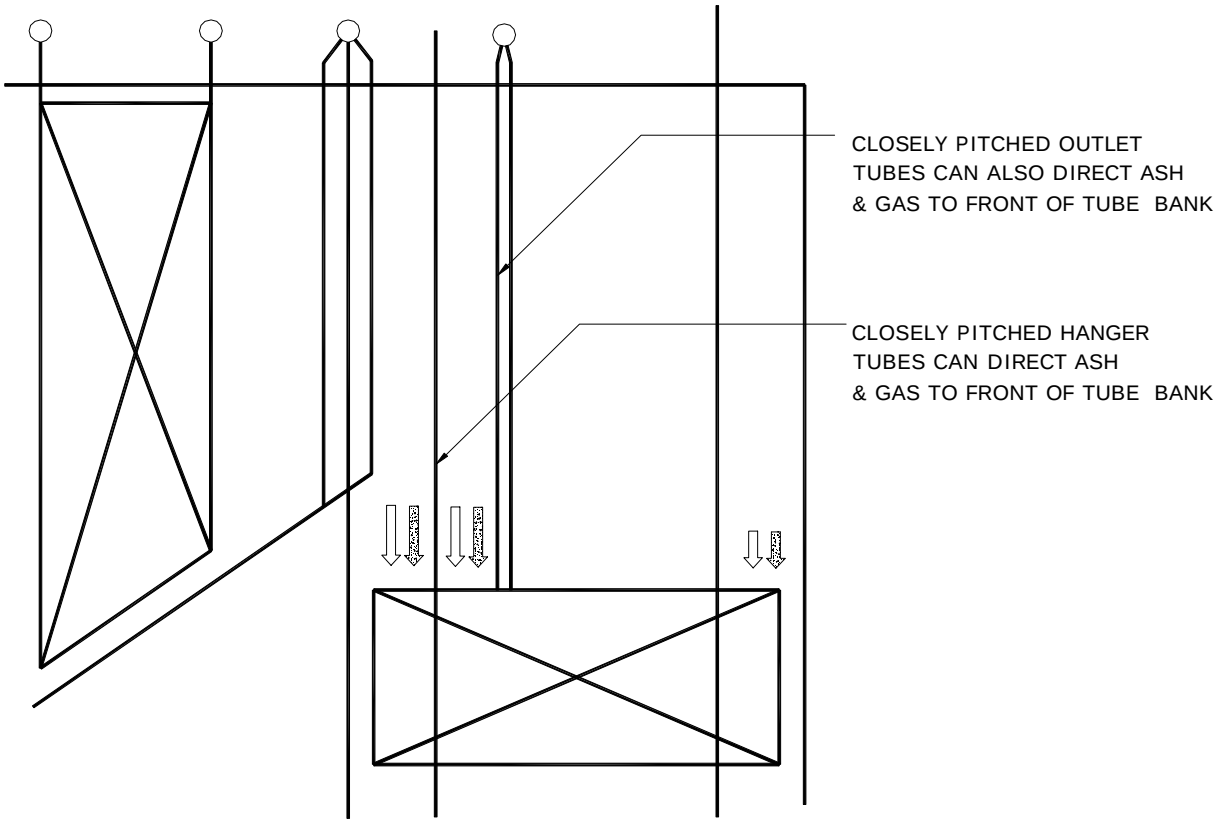


FIG 9 :IF COILS COULD BE ARRANGED FROM SIDE TO SIDE, MOST OF THE PROBLEMS CAN BE AVOIDED

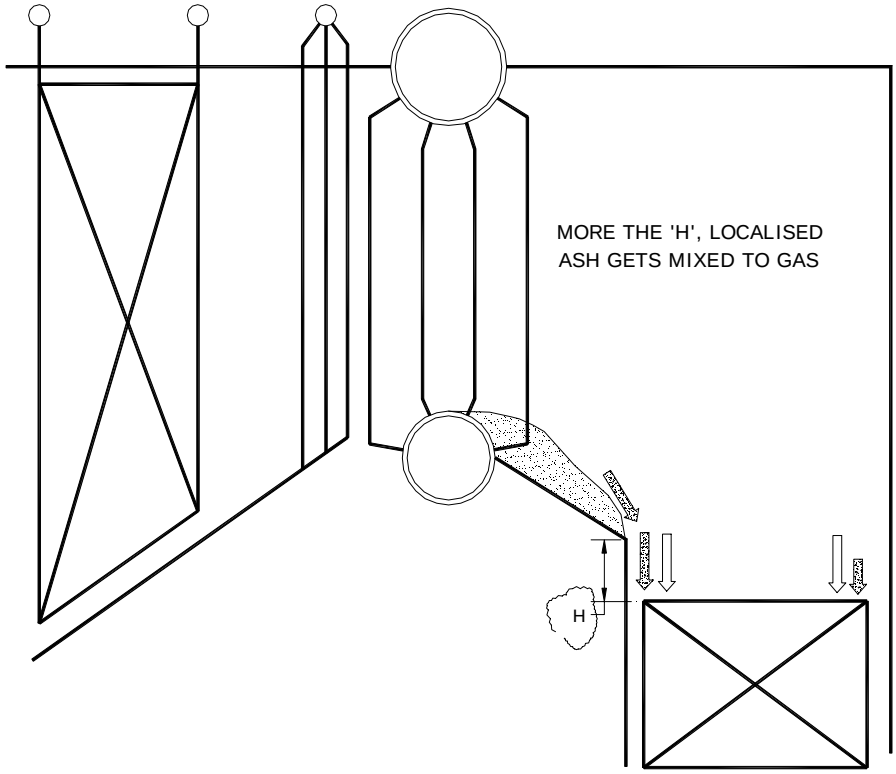


FIG 10 : ASH ACCUMULATIONS AT BOILER BANK CAN DUMP ASH TO NEAREST COILS.

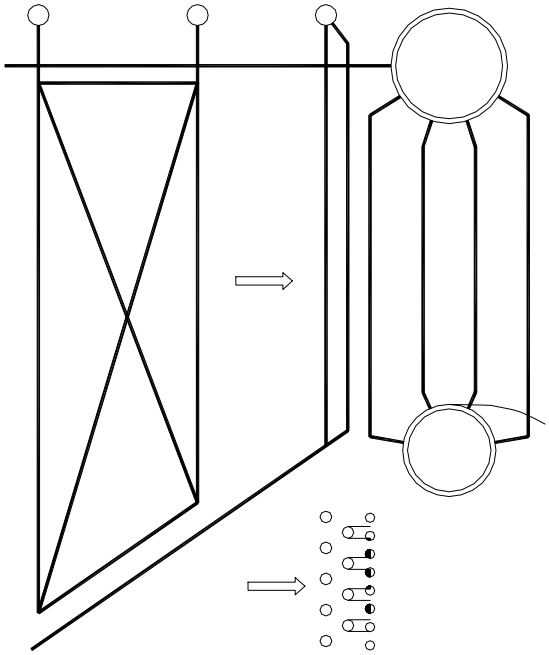

FIG 11: MISMATCH BETWEN PITCH OF SCREEN TUBES AND TRAILING BANK TUBES CAN GET ERODED

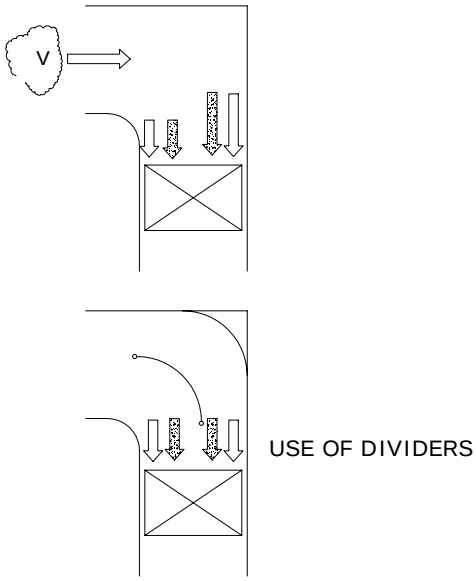


FIG 12: MORE THE 'V', MORE THE PREFERENTIAL FLOW

**CASE STUDIES ON EROSION OF BOILER TUBES**

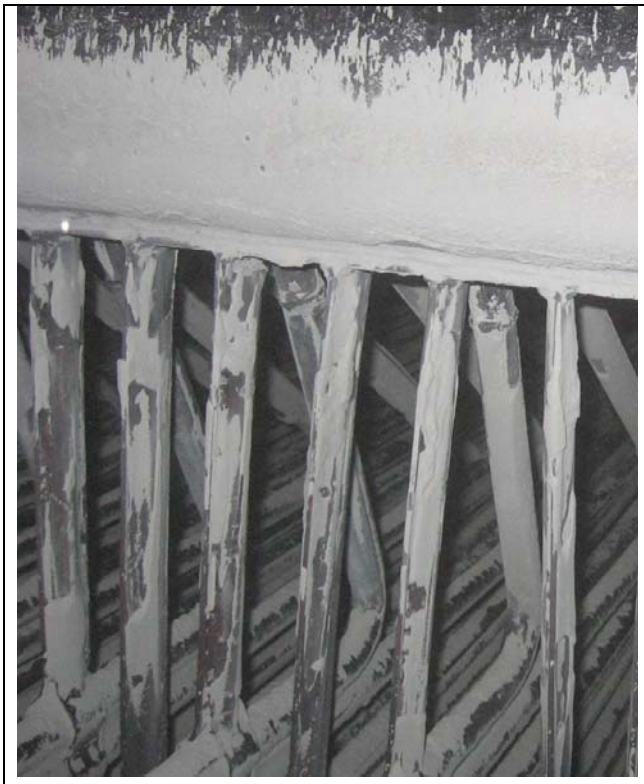

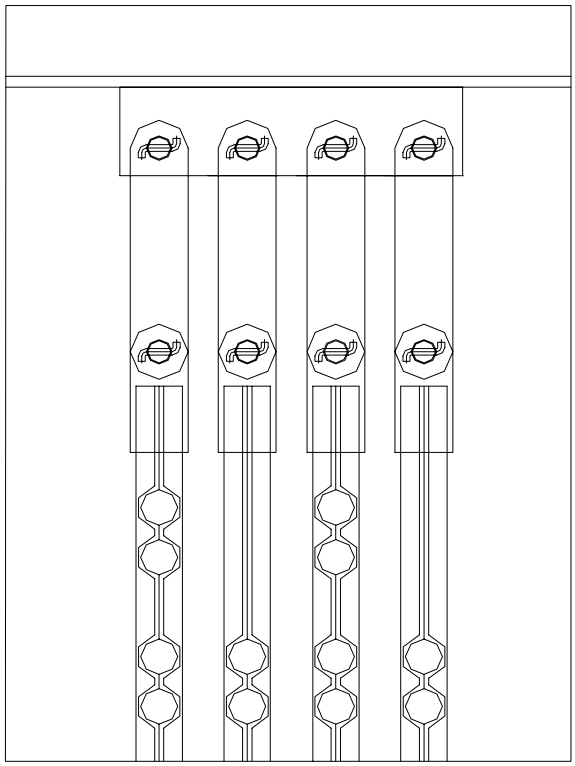

Case 1: Economiser hanger support system is of welded design. Uniform pitch & verticality could not be maintained during erection or repair. Drilled hanger plates & lug plates ensure the pitch. During any repair work alignment & spacing can be again ensured.

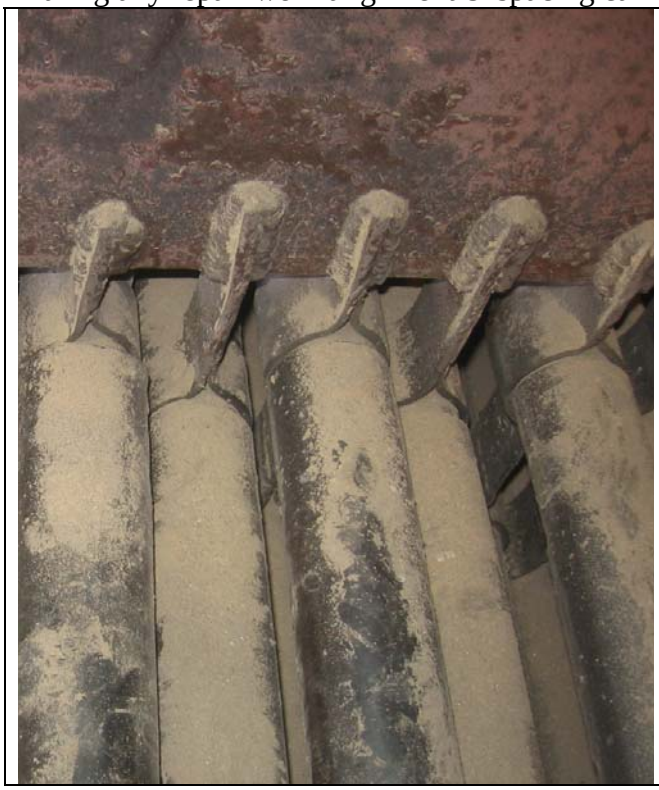

Case 2: A welded support system for an economiser is seen here. The economiser tubes got eroded haphazardly due to non uniform pitch. Staggered pitch needs more care to maintain the longitudinal pitch.

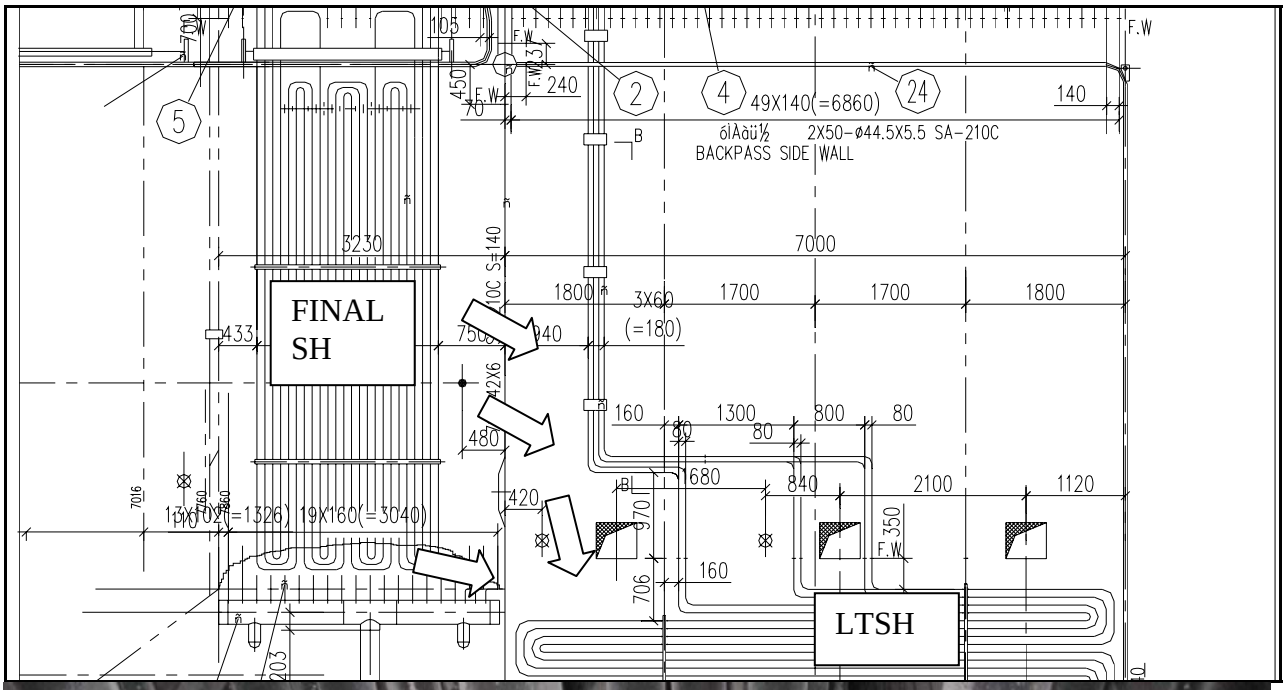


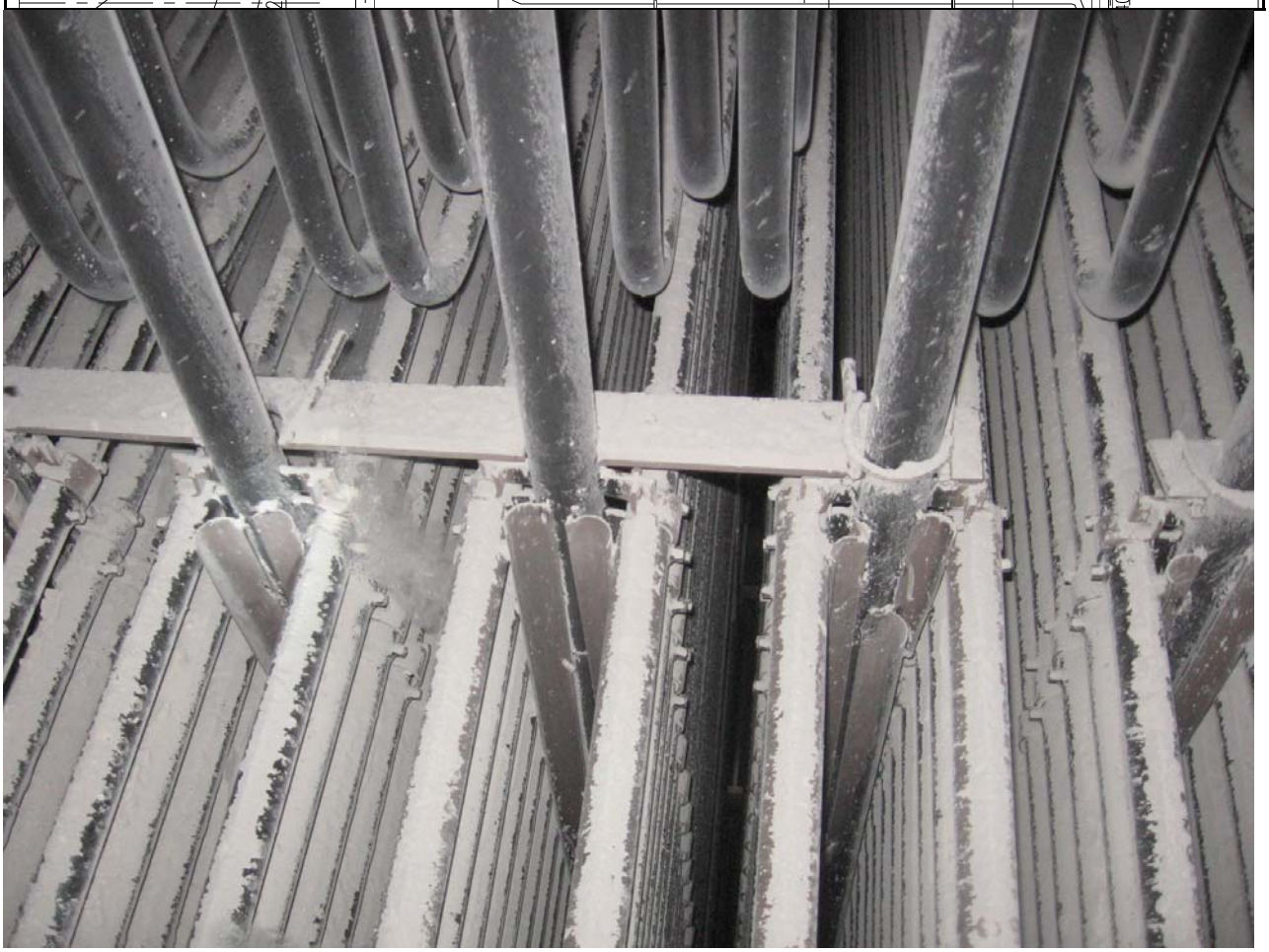

Case 3: The ash settling below final SH was found to spill more towards front portion of LTSH. The LTSH outlet tubes are so closely pitched and worked as curtain & made the ash fall in front section of LTSH. The LTSH outlet tubes need to be shifted away from hanger tubes. The erosion was so heavy that an unconventional shielding had to be done here. The uniform pitching & alteration in outlet tube disposition would have solved the problem.

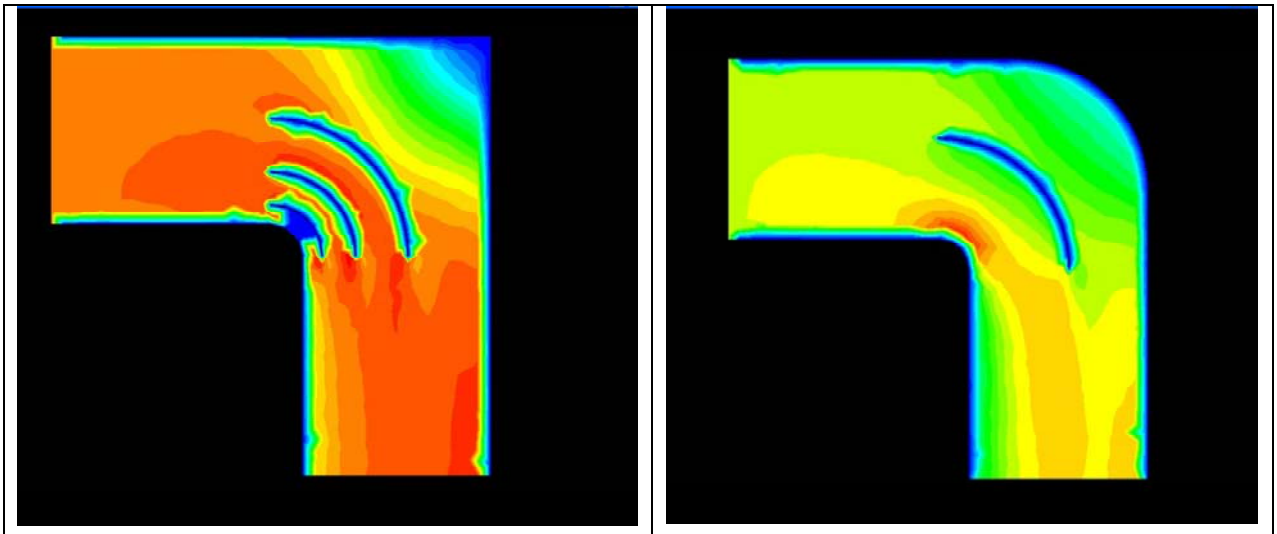

Case 3: In one case the economiser was eroding along the rear wall. The gas baffle arrangement was altered based on the CFD analysis and the erosion pattern was removed.

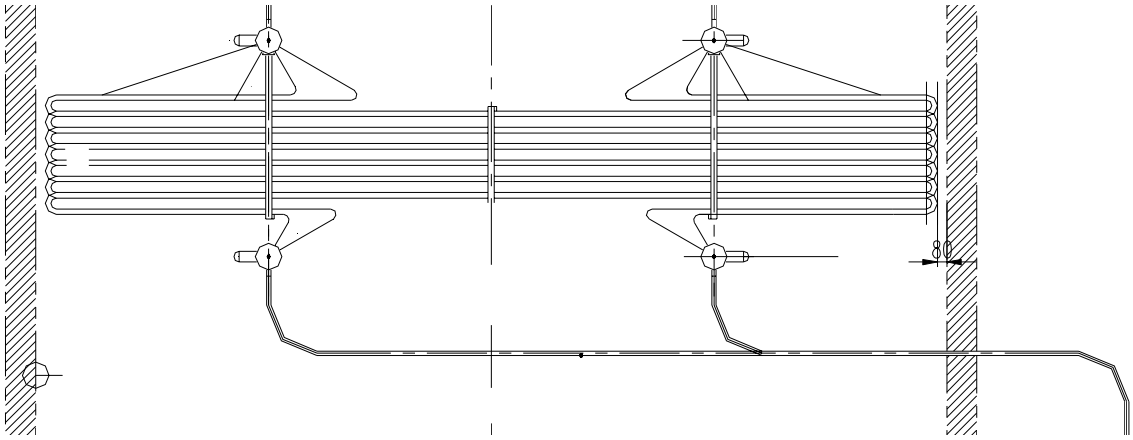

Case 4: The economiser headers are in the flue path. The economiser tubes are finned type and also staggered. The clearances were so less that the ash could easily trap in to narrow spacing of the tubes. Clogged ash formed during a fouling coal had led to erosion within the bank. Placing headers inside had also led to higher apparent gas velocity.

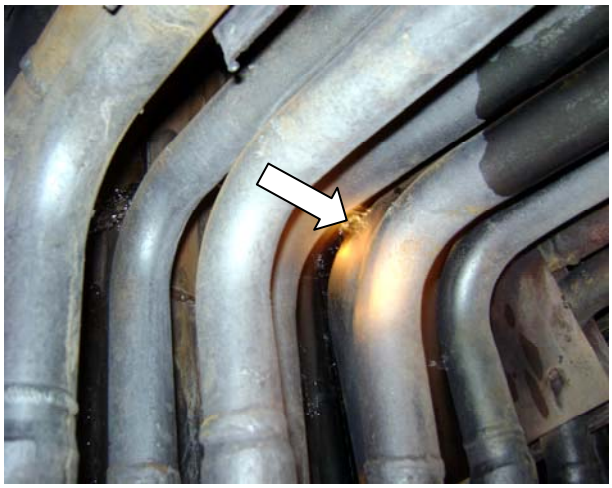

Case 5: The SH coil bends had come close to the casing, that the bends had got eroding. The shields were not placed properly during a maintenance & it led to failure of SH.

Case 6: The protection shield at bends was not placed properly during maintenance. This had led to a stoppage of the plant. There is a gas baffle to prevent the gas going along the bends.

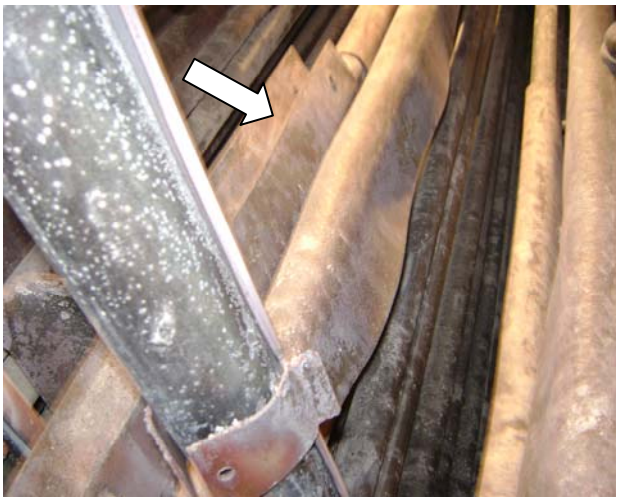

Case 7: Erosion at the top rows of a convection phenomenon depends on the arrangement of pressure parts layout. A shabby work of shields can lead to poor availability of the boiler. We can see how the shields are disoriented. The waterwall is seen eroded due to shields. The distorted shields have led to multiple failures within the bank. Simply all the shields were removed and all tubes were replaced in a scheduled manner.

Planned replacement of tubes can improve the availability of the boiler than simply resorting to shields. Shields & baffles are to be engineered depending on various parameters, such as present velocity & temperature profile, tube to tube clearances.

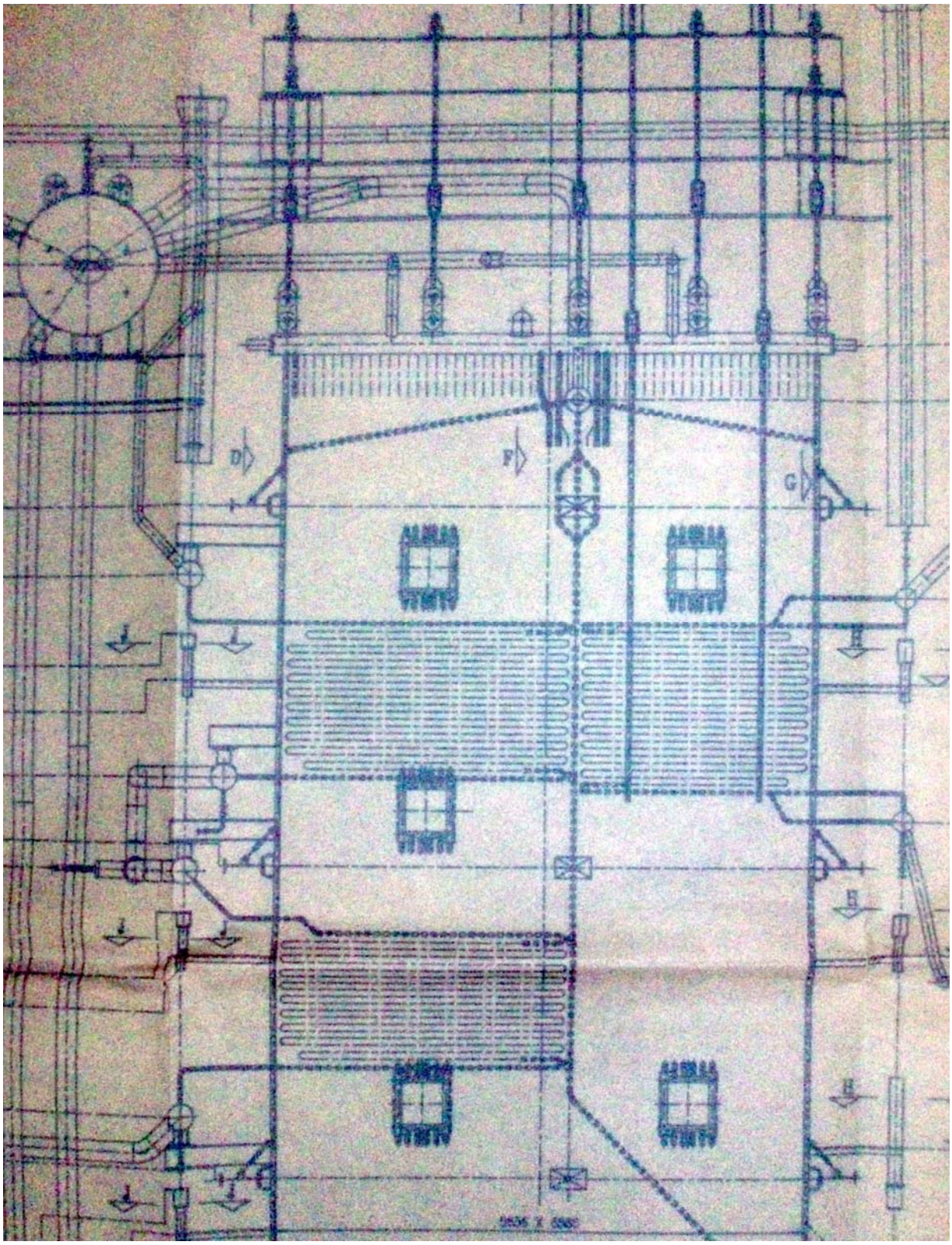

Case 8: This boiler suffered erosion of tubes all over in the first pass whereas in the second pass suffered no erosion though the design gas velocities were same. The small window opening had caused increase in the ash concentration in 1 pass and the mild vibration prevalent due to support system had led to erosion of convection SH tubes.

## IDEAL DRUM INTERNAL ARRANGEMENT

The number of boilers being installed for Cogeneration / captive power generation is increasing day by day. I happen to diagnose water carryover problems in some boilers. One of the causes for carryover is improper design of the drum internals. A steam drum internal if not designed properly / erected properly can lead to failures related to mechanical carryover / poor boiler water chemistry situations. Hence I have chosen to bring a review of the fundamentals of drum internals in this article. The article is basically for natural circulation boiler of 66 kg/cm2 pressure and above.

A steam drum of the boiler is meant for performing the following.

1. Steam is purified by the steam drum internals which may have the baffle separators, cyclone separators, Chevron separators, demisters / Screen driers.
2. Acts as reservoir and provides the necessary head for the circulation of water through evaporative surfaces.
3. Supplies water for a brief period in the event of stoppage of water supply.

The steam drum sizing criteria are as follows.

1. The length is decided based on the number of cyclones to be housed. The number of cyclones is so decided that the steam water mixture velocity is 5 to 6 m/s. The pressure drop across the cyclone is limited to 4-5 psi. Higher pressure drop drastically affects the circulation ratio.
2. The diameter is so decided to hold the required water volume between normal water level and trip level. For Waste heat recovery boilers, the process shut down time / gas isolation time may last from 4-5 minutes. Accordingly the hold up time is provided. Depending upon the nature of process one may go for 10 minutes hold up time too.

The arrangement of drum internals should meet the following performance criteria.

### *FEEDWATER DISTRIBUTOR PIPE*

1. Should distribute the fresh water through out entire drum length so that the fresh water mixes well with boiler water. It should lead to uniformly sub cooled water through out the drum length. The feed distributor should not disturb the drum water level. It should not lead to localized swelling of water level.
2. It should not obstruct the water entry into the downcomer. Otherwise it may lead to circulation failure of evaporator section.
3. The pipe should not direct the cold water to drum surface. It may lead to differential metal temperature and may strain the metal. The feedwater outlet velocity from distributor shall be restricted to 1.2 m/s. The distributor shall be located at 250 mm away from the steam drum internal surface.
4. The feed distributor pipe shall be flanged for easy removal and flanges shall have proper machining done on the mating faces. Gaskets are not to be used as they fail over a period.
5. The location of feed distributor shall be in the steam space with proper baffles in case of steaming economizer. The steam shall take a tortuous path to facilitate water droplets separation.

### *SAFETY VALVE*

1. Should be so located that the steam when vented out should not disturb the steam drawal by the saturated steam links to superheater. It should not lead to starvation of Superheater. Hence it is generally located outside the steam drier unit.

2. The stub inlet diameter should not be less than that of the design orifice area which was selected based on the required steam relieving capacity.
3. The stub length of safety valve should be as short as possible. If the stub is long, there will be pressure drop in pipe causing frequent reseating & lifting.

***CHEMICAL DOSING PIPE***

In order to maintain desirable boiler water chemistry, suitable chemical is added directly into the drum water. The chemical is dosed through the chemical distributing pipe. In high pressure boiler, the pH and phosphate management is a type of program being adopted. There are other proven treatment programs such as all volatile treatment (AVT) and polymer treatment.

1. Concentrated chemicals are being dosed in the boiler water. Hence the piping shall be of non corroding material. The piping shall be of stainless steel construction.
2. The chemical should be well distributed through out the drum length. Or else it can be connected to feedwater pipe itself so that it helps for better mixing.
3. The chemical distribution piping should not get choked due to chemical. The hole diameter shall be 6 mm. Holes shall be pitched at 300 mm.
4. The chemical should not get drained off through the blow down pipe. It should be so located that the chemical gets mixed well with the fresh water before entering in to the downcomers.
5. The chemical could be dosed in feedwater pipe just before drum. This will ensure a good mixing of the water & chemical. It would also ensure a very good distribution.

***CONTINUOUS BLOW DOWN PIPE***

The boiler water is evaporated continuously and the relative pure steam leaves the boiler drum. This mechanism is leads to concentration of boiler water with more dissolved solids. Since the solubility of various dissolved solids is limited based on the operating pressure, it is necessary to limit the concentration of dissolved solids in the boiler water. There is always a carryover of dissolved solids of boiler water in to the steam. This is called vaporous carry over. The percentage of carryover of each constituent is a function of operating pressure of the boiler. Hence it is necessary to limit the concentration of boiler water with dissolved solids. Silica is a bad water constituent that leads to hard deposits on turbine blades.

The continuous blow down pipe is required to meet the following criterion.

1. It should blow down the high TDS boiler water only. In should not lead to blow down of fresh water.
2. It should be so located that it does not drain the dosed chemical.
3. Since it is customary to take the boiler water sample from a CBD line, the sample should be a representation of boiler water solids.
4. The CBD pipe should be able to draw the boiler water from the entire length steam drum. Any localized sampling will lead to a wrong sample of the boiler water.

***DRUM LEVEL GAUGE***

The drum level is not something that is truly a single level inside. Depending on the downcomer size, number off, distance between downcomers, circulation rate, and boiler operating pressure and baffle arrangement, the drum level varies along the drum length. The drum level tappings need to be strategically located so that the water level is safe on low water level. There should be a device which snubs the minor wavy level changes. To summarize, the level gauge should meet the following criteria.

1. It should show the true level near the downcomers area.
2. It should have device that filters minor level variations.
3. The drum level gauge tappings should be at the same level as that of level transmitters.
4. Level gauge centre shall coincide with the desired drum normal water level (NWL).
5. Both the level gauge locations should be such that the inside level conditions will not be different.

***CYCLONE BOX CHAMBER***

When the boiler is fitted with cyclone separators, all the water steam mixture is collected in a chamber. The mixture is made to pass through multiple cyclones. The cyclones are mounted through flange system to the cyclone box chamber. The cyclones separate the water and return to the water space of the drum. The steam leaves through the top chevron unit. The total system should meet the following requirements.

1. The steam separator box shall be fully dismountable in the case of bi drum boiler in order to facilitate bank tube replacement. The box shall be of welded construction for single drum boiler.
2. The steam separator box shall be leak tight. There shall not be any bypassing of steam / water. The water / steam may cause localized splashing of drum water to the demister section.
3. The cyclone shall be removable. Its mounting flanges shall be leak-proof. A good care is required while fabricating this. Any leaks here again would lead to splashing of water to the demister section.
4. The cyclone design should be such that there is enough seal leg in the water side when the water level comes down. In the case of tangential entry cyclone the water separated leaves through the bottom. Hence the seal leg should be at least 200mm below the low water level. In the case of axial cyclone the water discharged from top and hence such a situation does not arise.
5. The fit up of chevron separators should be proper on the top of cyclone.
6. Crimping direction in the chevron should be such that the water droplets separated does not re-entrain in to the steam.

***STEAM PURIFIER / STEAM DRIERS / DEMISTER***

Demister can be two stage Chevron driers / demister / screen driers. Its purpose is to trap the droplets and lead them back to drum water.

1. There should 300 mm distance between HWL and steam purifier, so that the water does not directly enter in to the steam driers / demisters.
2. Demister mounting frame has to be leak proof. It has to be seal welded to drum.
3. Chevron / Demister packing should be sloped so that the water droplets collect to the lower part. The separated water droplets should be collected in a trough and shall be drained off to the water side. The droplets should not re-entrain in to the steam.
4. Demister / drier area should meet the minimum theoretical area requirement. If not the steam velocity will so high, that the water droplets will be carried with the steam.

***SATURATED STEAM OUTLET PIPES***

There is lot of meaning in taking a distributed steam outlet from entire length of driers. Once the drier area is designed and incorporated, it is meaningless to take the saturated steam through a single outlet. It implies that the drier effectiveness would come down. A manifold connection inside the drum or outside the drum is preferred.

1. Baffles are required to prevent the direct entry of steam in to the steam outlet pipe.

2. Number of tappings shall be provided in order to draw the steam in a distributed manner across the entire length of the demister.

***DOWNCOMER***

Depending upon the circulation ratio, the downcomer flow area is selected. It is advisable to draw the water from the entire length of the drum. This avoids the very low dip of water level just above the downcomer. When low water level occurs, the steam may directly enter in to the downcomer and the circulation head will be lost.

1. To avoid flow induced swirl at the downcomer inlet, Vortex breakers are a must for downcomer of 100 nb and above.
2. Vortex breaker shall have a cap plate to prevent the eye seeing the steam space.
3. It is preferred to have more number of downcomers pitched to cover the drum length.

***INTERMITTENT BLOW DOWN PIPE***

It is apt to name it as emergency drain valve through which the water level is brought down in case of high level. In low pressure boilers, the intermittent blow off valve was strategically located for removal of settled sludges generated by phosphates reaction with calcium and magnesium salts.

1. This tap off is generally located in such a way that it does not disturb the water level indication.
2. The arrangement should not disrupt the flow through downcomers.

***CASE STUDY -1***

The Photo 1 shows the drum internals of well maintained Boiler water chemistry. The Continuous blow down line is closer to chemical dosing line. Naturally the sampling line taken from CBD line will be containing more chemical and its water chemistry is different from bulk water. The steam drum shows the undergoing corrosion within the boiler.

***CASE STUDY 2***

The photo 2 shows the routing of CBD line closer to the chemical dosing line. Water sample will not be representative of boiler water. The chemical loss will also be more. The concentration of chemical could be more in sample and will misguide the treatment.

***CASE STUDY 3***

Photo 3 shows the carryover due to improper cyclone box fit up. The steam drum bears the mark of water going to the screen drier directly. The incomplete welding of cyclone box caused this. Photo 4 shows the deposits inside SH coils, which failed due to subsequent overheating.

***CASE STUDY 4***

The photo 5 shows one of the best steam drum internal layout. The photo 6 shows the steam drum with a good magnetite layer protection.

***IMPORTANCE OF DRUM INTERNALS INSPECTION***

The above cases are some sample cases which had been offered to me by boiler users. When there are repeated carry over related failures / water chemistry related failures, the cause mostly hangs inside the drum. The drum internals assembly needs to be inspected by an expert who has the knowledge of the design. The drum internals conditions speak on how well the water chemistry is maintained. I always preferred to critically examine the drum internals when I had a chance.

---

Photo 1: Chemical dosing line is laid closer to blow down line.

Photo 2: Chemical dosing line is laid closer to blow down line. Cyclones dismantled.

Photo 3: Physical carryover of water from cyclone separator box to drier section.

Photo 4: Deposition seen inside the SH tube, due to mechanical carryover.

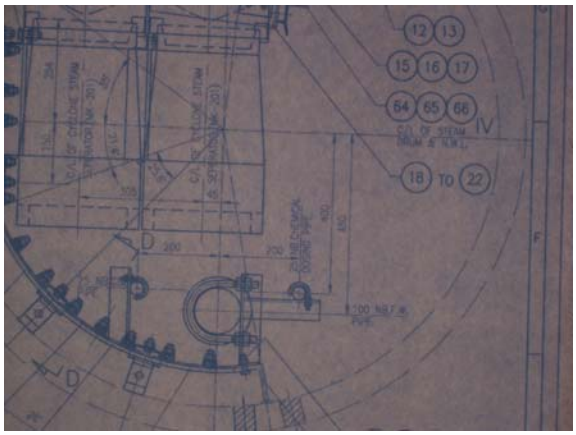


Photo 5: Right way to locate the FW piping, HP dosing pipe & CBD pipe

Photo 6: Drum condition with the right piping layout.

**WHY THE WATER LEVEL IN GAUGE GLASS KEEPS OSCILLATING?**

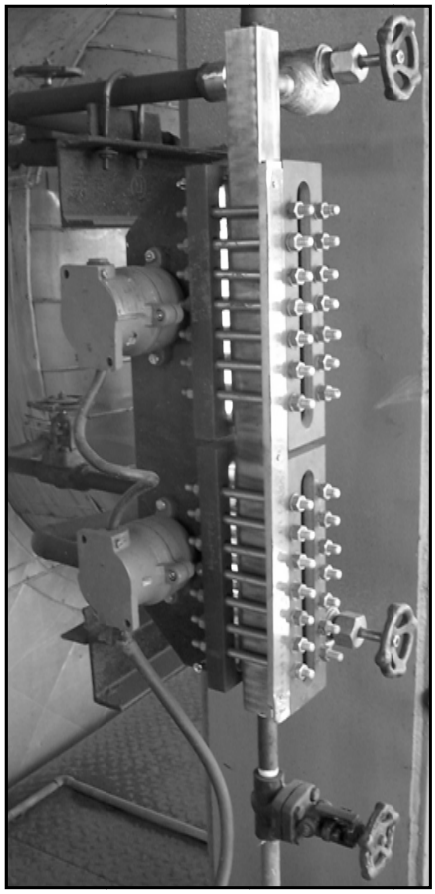

A customer was annoyed about the unsteady water level in their boiler. The boiler was shut for a long time for pressure part repair work. After the restart of the boiler, they found that the water level had begun to oscillate. The level fluctuation in the local water level gauge was to an extent of 50 mm. The level fluctuation was rapid.

The reason for fluctuation was diagnosed to be the rust formed inside the boiler during the shut down period. A boiler is cleaned up by alkali boil out during the pre-commissioning stage. During this process, the loose scale, oil and rust are boiled out. If this was not done, there would be heavy foaming in the boiler due of presence of oil and the suspended impurities. The same phenomena could occur when the boiler had been on a long open outage. The rust formed in the boiler would be enough to increase the suspended matter. As the deaerator (in case of dedicated deaerator) gets rusted during outage, it also adds up to water contamination with rust.

The remedy would be to give blow down after some initial firing and pressurization. The blow down must be done from all bottom points. At the time blow down, the fire must be put off. We should allow the water to become stand still (without circulation), so that the suspended matter would come down to lower points. Water treatment chemical supplier could be consulted for dosing flocculent chemical on line to remove the suspended solids.

**WHY THE NON RETURN VALVE FLUTTERS?**

Some of the readers might be experiencing the NRV flap making noise. The NRV makes noise when the flow is inadequate. There are two case studies on this subject, which I would like to present to the benefit of readers.

***CASE 1***

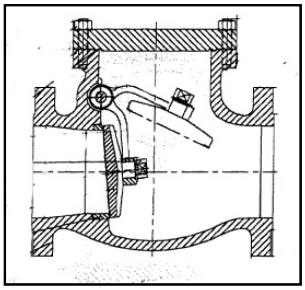

A client had complained that the non-return valve in steam line at deaerator was fluttering. The irritation made him to call me up. The deaerator pressure control valve was crack open. It meant that there is no sufficient steam flow available for taking care of NRV flap. There is a force required for keeping the flap in lifted condition. Generally we select the line size based on steam pressure & steam temperature. That is, the line selection is based on the steam velocity. The recommended steam line velocity is 30 to 50 m/s. In case the actual steam consumption is so less and the steam velocity is inadequate, then the NRV flap flutters. The way out is to go for reduced line size so that the steam velocity would be sufficient to keep the flap lifted up.

Yet I advised the client to remove the flap as there was no other source of steam supply to deaerator. Since it was a low pressure deaerator with 105 deg C as outlet water temperature, I had suggested this. In case there was a possibility of reversal of steam flow, as in high pressure deaerator, then the non-return valve would be required.

***CASE 2***

In another case, there were two boilers connected to common header. The boilers were running at part load. The NRV of one boiler kept on fluttering. The reason was again the reduced steam flow. Here the solution can be nothing but changing to smaller steam line size.

***THE FUNDAMENTALS***

The non return valves do not have much turndown. There is a minimum velocity required to keep the flap up. This is given by an expression,

$V = j \sqrt{v}$,

where j = constant, v = specific volume of the medium. Depending upon the make of the valve, the 'j' value would be different.

Depending on turndown expected, it would be necessary to introduce the reducer and expander. The pressure drop will not be greater than a bigger valve with flap partially open due to lesser flow.

---

**AUDITING ENERGY SYSTEM EFFECTIVELY**

In the growing market of energy systems, Industrial boiler companies have been doing a good business of late. I have to say they are busy too. Lots of new engineers have come in to the field. In the companies the old stalwarts have not put systems for design audit & field audit of the boiler & subsystem. This has indirectly resulted in premature failures & shut down of the plant in many cases. It has become order of the day to engage consultancy companies for design audit & inspection companies for quality audit. If you ask me whether this is working – my answer –yes to some extent. The reason for the remark is the absence of a well defined audit system, that could not do the needful to industry. In this article, I have brought out some of the failures by the manufacturing companies who have not institutionalized a proper audit system in place. You would also find that Boiler buyers are over confident about their competency in this field energy system.

- ***TYPES OF AUDIT***

Like the various performance review system such as six sigma / TPM we need to have some system up to putting up a power plant. There are five types of audits for power plant equipment. They can be categorized under design audit, manufacturing audit, construction audit, operational audit & shut down audit.

- ***DESIGN AUDIT***

Design audit is to be carried out even before placement of the order. The consultancy companies do have bunch of specifications to spell out the requirements. There are data sheets to be filled in by the prospective vendors. Consulting companies make a comparison of heat transfer areas, Equipment sizing, make of components. This stage definitely does ensure the job as there had been a considerable development in the consulting companies to revise their specifications as they gain experience over a period.

There are many boiler user industries, which simply rely on some employees who have put up some projects in the past. A project co-ordination work is different from purchasing the equipment with right specifications. I have encountered undersized equipment being purchased in this way. Items which have not been proven are being purchased. Particularly in smaller capacity segment, boilers are being purchased without a design verification process. It is my advice to these companies to have a design audit done before order placement. Some of the calls which I get are due to lack of knowledge in the design side by the internal project team.

- ***MANUFACTURING AUDIT***

Here comes the knowledge & experience. Many of us have got years of experience in this field. Unless there is a detailed design experience one may not fit into this role. Manufacturing audit goes with lots of design & field experience. Manufacturing audit means mostly checking raw material quality, manufacturing process, dimensional inspection etc. Companies that conduct manufacturing audit mostly do a nice job of reviewing identity of raw material, overall dimensional inspection of the product, reviewing the stage inspection reports, reviewing the shop tests, reviewing the Non destructive testing (NDT) reports & Destructive testing (DT) reports. Yet what we miss here is the purposeful inspection. When the inspector fails to possess the operating experience of the end product he can not inspect the necessary parameters that have to meet the ultimate requirement of product performance. There are persons in the QC auditing companies, who verify the product with

respect to the manufacturer's drawing. Lack of knowledge of drawing reading skill leads to failures in inspection. Some of the problems which I had diagnosed are due to this aspect.

- ***CONSTRUCTION AUDIT***

Many manufacturing companies have been forced to recruit fresh engineers to do construction job. This is the present status as the demand has gone up for persons in boiler & power market. Almost all manufacturing companies do not have a field audit system for the boiler system. There have been innumerable cases of failures by the manufacturing companies. The consulting companies who have been part of the project also fail to look in to the construction audit. The audit needs to be purposeful to get the product performance in service. We may see there are no log sheets used by the companies that are engaged in field quality. They tend to see mostly on welding quality rather than the ultimate product performance. Even if one agency is hired to do this job, it may be worth to hire a second agency to construct the audit. Once I was called at a plant for auditing a boiler under conversion to FBC. When the two agencies did the job, number of useful points came up that resulted in a perfect commissioning of the plant. ( I know I am selling myself at this point !).

- ***OPERATIONAL AUDIT***

There is no doubt that the boiler operation / power plant operations have lots of data being generated by the Data acquisition system. These data are summarized and critically reviewed by the plant senior personnel. There could be lots of improvement possible in the boiler operations in the combustion side & water side that would improve the plant availability. Failures to maintain instrumentation system often have led to deterioration of performance & availability. Equipment supplier could be called upon to conduct an audit of the operational parameters.

Operational audit should include review of operational parameters of the boiler and the computation of boiler efficiency & plant efficiency. There are cases of poor water side management that were detected from the feed water, boiler water, saturated steam, superheated steam, TG condensate, plant condensate & make up water analytical reports. A review by a designer / water treatment specialist could be useful in extending the availability of the plant. The recent demand for high pressure boilers a stringent water quality management. The knowledge gap can be reduced often after a review by the experts.

- ***SHUT DOWN AUDIT***

Boiler users are giving a new dimension to this nowadays. I have been getting lots of call related to this. I say it is worth it, if we have to keep the equipment fit. The audit may also be conducted by the manufacturing company. Boiler availability deteriorates over a period due to fuels we use & the design defects, construction defects & operational defects. There is also a need to modify the equipment to suit the changing scenario in fuel characteristics. These could be identified only during a proper shut down audit.

- ***CASE STUDIES***

I have chosen to include the reports of some of the audits performed by me in the recent past. I have dressed up the report so that I would not pinpoint that some manufacturer is at fault. The point driven in this article is to say that the auditing needs to be done by inviting an external agency. If an audit can bring out one valid point that can improve the plant availability by a day, it is good

enough for a decent payback. I have brought out so many photographs that illustrate the vast scope for improving the performance.

*Case Study 1*

A customer had purchased a boiler based on thumb rule of heating surface per ton of steam generation. He had called me for inspecting the boiler that had reached the site. I found that the boiler design was altogether wrong. Instances of this type can be avoided by engaging the consulting company. The report that was handed over to owner is attached herewith.

*Case Study 2*

This case was an inspection of the power plant during commissioning period. The plant was facing a start up problem and I was called upon. The visit led to revealing of innumerable design defects & construction defects & commissioning defects. The readers may get a dose of education from the report that is dressed up little bit. Read the report that is attached herewith. The consultancy company & quality control company that had been hired missed out many details.

*Case Study 3*

This was a case of boiler inspection during a shut down. The shut down revealed need for modifying the water quality parameters. Impact of fuel characteristics was seen on the bed tubes of the boiler. There were several useful points resulted out of the energy audit. What is more is that the boiler operating engineers got an insight of the equipment which they were handling. No doubt that the shut down audit provides a training session in the process.

***SUMMARY***

I had been doing audits of this kind to many boiler users. There are numerous cases that the power plant engineers get their supplement knowledge out of the audits performed and the discussions that follow after the audits. Readers may avail our auditing services for the benefit of better availability of the energy system.

We have recently introduced a protocol system devised for a new power plant under construction. Samples of protocol check points are shown at the end of the case studies.

---

**AUDIT OF 12 TPH AFBC BOILER UNDER SUPPLY**

The boiler parameters are 12 TPH (from & at 100 deg C), 28 kg/cm2 (design pressure), saturated steam, rice husk fired overbed FBC boiler, twin furnace, waterwall cum shell type boiler. The dust collection system is a mechanical dust collector. The heat recovery system given is an Airpreheater. The following are the points of inspection.

1. The shell is provided with 63.5 x 4.06 dia flue tubes. The number of tubes are 161 & 110 in 1 & 2 pass respectively. This too less. The average gas velocities in 1 & 2 pass are estimated to be 39 & 35 m/s. The gas inlet velocity in these tubes are working out to be 41.8 m/s & 37.42 m/s. This kind of gas velocities are used in oil / gas fired boilers. The draft loss across the shell alone will be of the order of 180 mmWC. The erosion of the tube will be high if we try to operate at full load. Also the ID fan head selected is only 210 mmWC which will be totally insufficient. It is recommended to go for a new shell of 340 & 200 number of tubes in 1 & 2 pass respectively. In comparison with the present 8 TPH boiler the number of tubes should have been 385 & 158 in 1 pass & 2 pass respectively.
2. The FD fan selected is just meeting the MCR requirement. There is no margin considered by supplier. The FD fan flow required with 25% flow margin is 9288 m3/h whereas what is supplied is with 7200 m3/h.
3. The bed cross sectional area provided is adequate for a 12 TPH boiler. However the DP drop will work out to be 500 mmWC. The FD fan head will not be sufficient to take care of fluidization.
4. The APH inside tube arrangement is not OK. There is big gap of 150 mm on either side of the central baffle. See photo 5. This needs to be corrected.
5. The fuel feed point seem to be at a very high level over the bed tubes. See photo 6. Please compare the fuel feed point in the available 8 TPH boiler and revise the location suitably. My recommendation would be 300 mm above bed coil so that the husk will get in to the bed.
6. See photo 6. The fuel feed point is just above the ash collection chamber wall. The fuel will go directly to ash chamber.
7. The ID fan casing to impeller cut off is too less. This can create noise & vibration problems. This should be usually 10% of impeller ID. See photo 1.
8. The ID fan impeller to suction cone clearance is about 30 mm. This will affect the performance of ID fan. The gas recirculation within the fan will be more. The draft at furnace will be affected. The gap should be close 3 mm. This has to be corrected. See photo 2.
9. The ID fan shall not be provided with suction flap damper. See photo 3. Such a damper at ID fan will affect the fan performance. Locate the damper in MDC outlet duct which is 800 x 800 mm cross section.
10. The ID fan draft required will be 250 mmWC. At present what is selected is 210 mmWC.
11. A leak proof casing shall be provided for the furnace to prevent the air ingress in to the furnace.
12. At present the manufacturer has envisaged supporting waterwall at a different base level than the shell. This is not good as there will be differential thermal expansion. Please note the waterwall outlet header is directly connected to from tube sheet. This is an anchor point.
13. MDC cone to vane assembly is not proper. All the turning vanes should be at same level inside the cone. See photo 4.
14. The waterwall on thermal expansion will try to push the refractory wall. To take care of thermal expansion ceramic blanket can be inserted for 20 mm thick at the joint between the waterwall & refractory wall.
15. MDC outlet pipe to vane clearance is too high. This gap shall be filled with a 5 mm rod all around to prevent erosion of outlet tubes.

---

ANNEXURE for case study 1

Photo 1: The cut off between impeller diameter & casing is less. This can cause high noise & high frequency vibration of duct / chimney.

Photo 2: The impeller to suction casing clearance is around 30 mm all around. This can cause recirculation of flue gas. Thus the draft will be less at furnace.

Photo 3: There shall be no flap dampers in front of ID fan. This affects the fan performance.

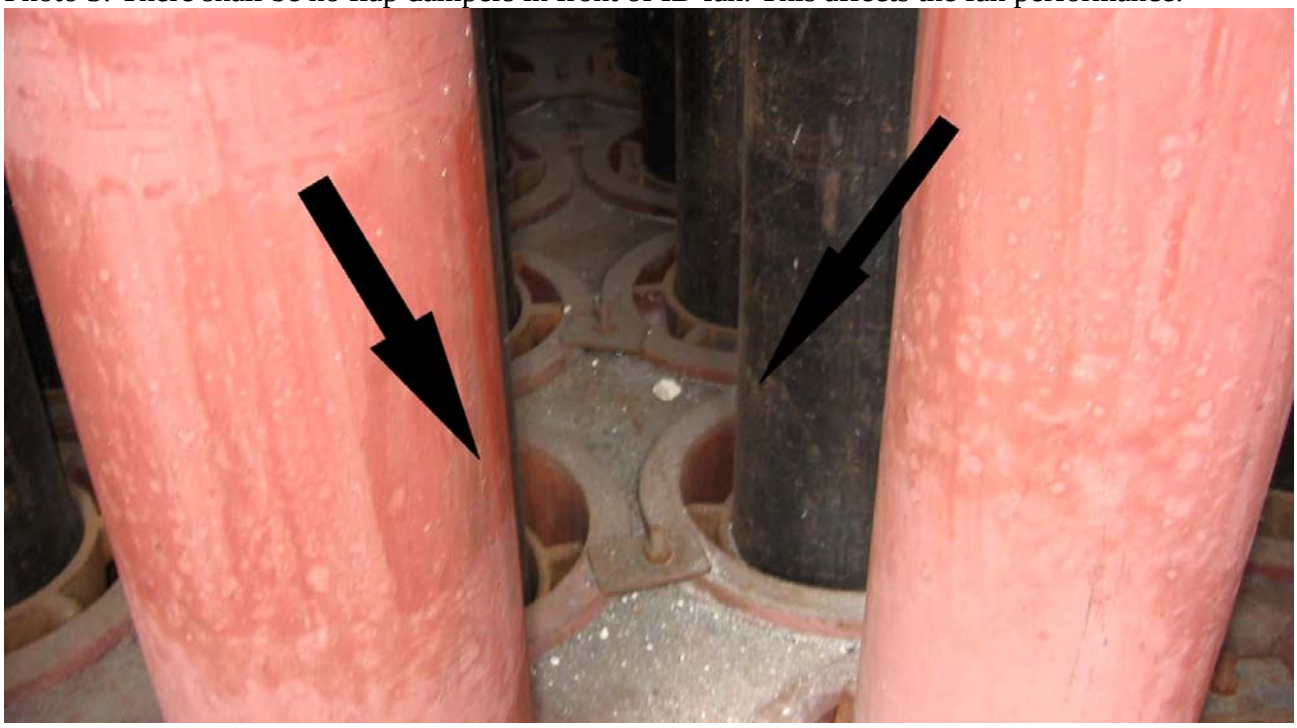

Photo 4: The gas turning vanes at MDC shall be at a uniform height inside the MDC cone. The gap between the outlet pipe & turning vanes shall be closed by a round rod. Otherwise the outlet pipe erodes.

Photo 5: The APH tube to middle baffle gap is too high. This can bypass the gas affecting the APH performance.

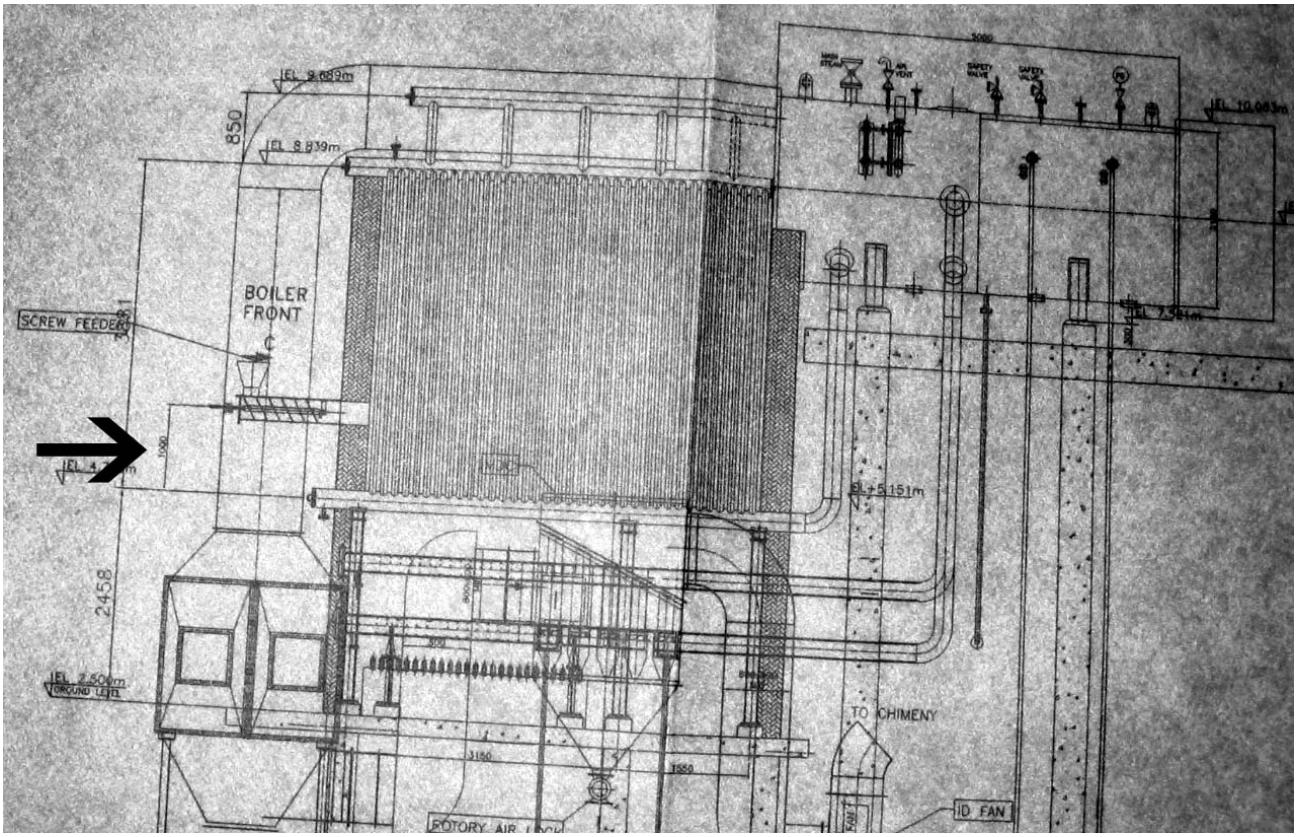


Photo 6. The elevation of screw feeder is too high to bed coil level. Check what is in the present boiler and provide the same. Recommended distance is 300 mm above bed coil.

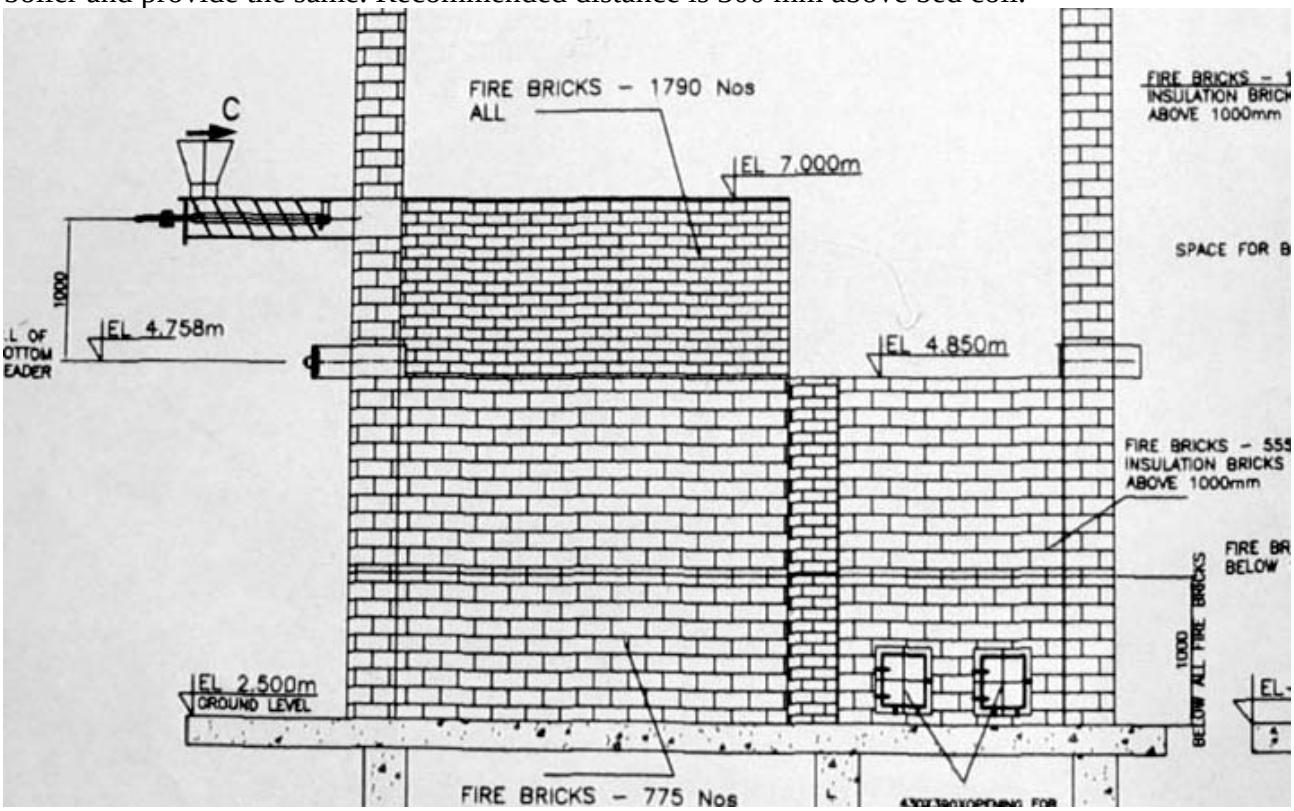


Photo 7. The husk may directly go to ash settling chamber, as the partition wall height is less.

**REPORT ON AUDIT OF 18 MW POWER PLANT**

The Petcoke / coal based thermal power plant is commissioned recently. The boiler parameters are of 85 TPH, 88 kg/cm2, 520 deg C. The design fuels are Coal, petcoke and partly lignite. The boiler is of single drum design with convection SH, Radiant SH and bed SH. The boiler was under shut at the time of visit. It was informed that the bed frequently clinkered during start up & during operation. The reason for such repeating problem is analyzed and reported in this report. Further the boiler & power plant steam piping installation were inspected. There are many points, which call for immediate attention. The report on such installation defects are covered in annexure illustratively.

*BED CLINKERING PROBLEM*

1. The design bed height as per O&M manual is 425 -485 mmWC. Actual operating data of the past one month indicates that the Airbox pressure is only 450 mmWC. This means the operating bed height is 300 mmWC. This is not a stable bed height for start up compartment after start up or for a compartmental operation. Low operating bed height means that the bed HTA is more. It is necessary to camouflage portion of bed coils so that the operating height increases. Phoscast may be applied above coal nozzle but with care. It may unnecessarily invite sites for erosion. If done above coal nozzles, both outer & inner coils are to be covered.
2. When a compartment is slumped its air bleed off valve must be kept open.
3. At present there is no instrumentation for knowing the operating bed height. The airflow measured will be too low with one compartment during start up. Only DP drop can be made use of as a measure for air flow. With this one can see how much bed height is available after mixing. At times the bed material from start up compartment spills to adjoining compartment. With less bed material ignition / bed temperature stabilization is difficult.
4. With less bed height the combustion is incomplete in the operating bed. The particles just leave after ignition. A minimum start up bed height of 250 mmWC is required. The bed spilling to adjacent compartment is reduced when we make a tall border along the edge of 2$^{nd}$ compartment during start up.
5. The bed coil area required for 950 deg C combustion temperature @ 30% Excess air is 113m2. The studded coil length required is 707 m. For a 900 mm expanded bed height, the immersed coil length available is 797 m. We can go for refractory cover of 550 mm in the 158 number outer coils only. This will provide a coverage of 87 meter.

*IMPORTANCE OF WATER CHEMISTRY*

1. For this boiler the pH-PO4 regime has to be in congruent mode. Excess of both will lead to caustic gouging. Bed coil in idle bed is more susceptible for caustic gouging.
2. The pH control for condensate has to be with morpholine. We should not attempt to maintain pH with Ammonia. It may not offer the indented protection to Air cooled condenser tubes as the ammonia has higher steam distribution ratio.

*VANISHING OF WATER LEVEL DURING START UP*

1. At present the water after pressurizing may be going in to the economiser due to the long piping. It is recommended to maintain a minimum leakage flow in economiser while the bed temperature rises during a start up. If drum level goes up keep CBD crack open.

*OTHER OBSERVATIONS*

The other observations are as per enclosed annexure.

*FINAL RECOMMENDATIONS*

Bed height instrumentation & refractory lining together is expected to avoid clinker operation during start up. Compartmental operation if unavoidable, rotate compartments every 3 hrs. Boiler water chemistry shall be managed with a 70:30 mix of tri-sodium phosphate & di-sodium phosphate. All piping spring supports shall be attended immediately.

---

ANNEXURE for case study 2

Photo 1: The flowmeter & APH bypass air duct are placed very close to FD fan. There is no expansion joint as well. The aerodynamic disturbance placed in the immediate vicinity of FD discharge is likely to be cause for vibration & noise. The flowmeter reading will not be proper as there is a damper at outlet.

Photo 2: The buckstays link erection is wrong. The present arrangement does not permit the expansion of waterwall. At some boilers this has resulted in waterwall corner tube fin tearing off & boiler waterwall caving in. This needs to be corrected as per drawing.

Photo 3: The Spring support base is distorted / erected improperly. A bracket could have been provided.

Photo 4: The Main steam line spring hanger is not carrying any load. The hanger rod from spring support is bent.

Photo 5: The rigid base support at main steam piping is likely to lift off after thermal expansion. It will be then wrong to have assumed that the pipe is supported at this point.

Photo 6: Already the feeder is of under capacity for petcoke. To this feeder, the limestone chute is connected. Moreover the petcoke regulation is not possible when limestone mixing is done like this. This is a very fundamental mistake.

Photo 7: Limestone feed chute is of rectangular. This would give problem as the limestone is hygroscopic. The Limestone has to be connected to drag chain feeder directly.

Photo 8,9 &10: Roof panel to CSH / RSH sealing is not OK. Ash is seen in the insulation cladding. Oxygen can not be taken as a guide for setting the air flow, since the air ingress will mislead.

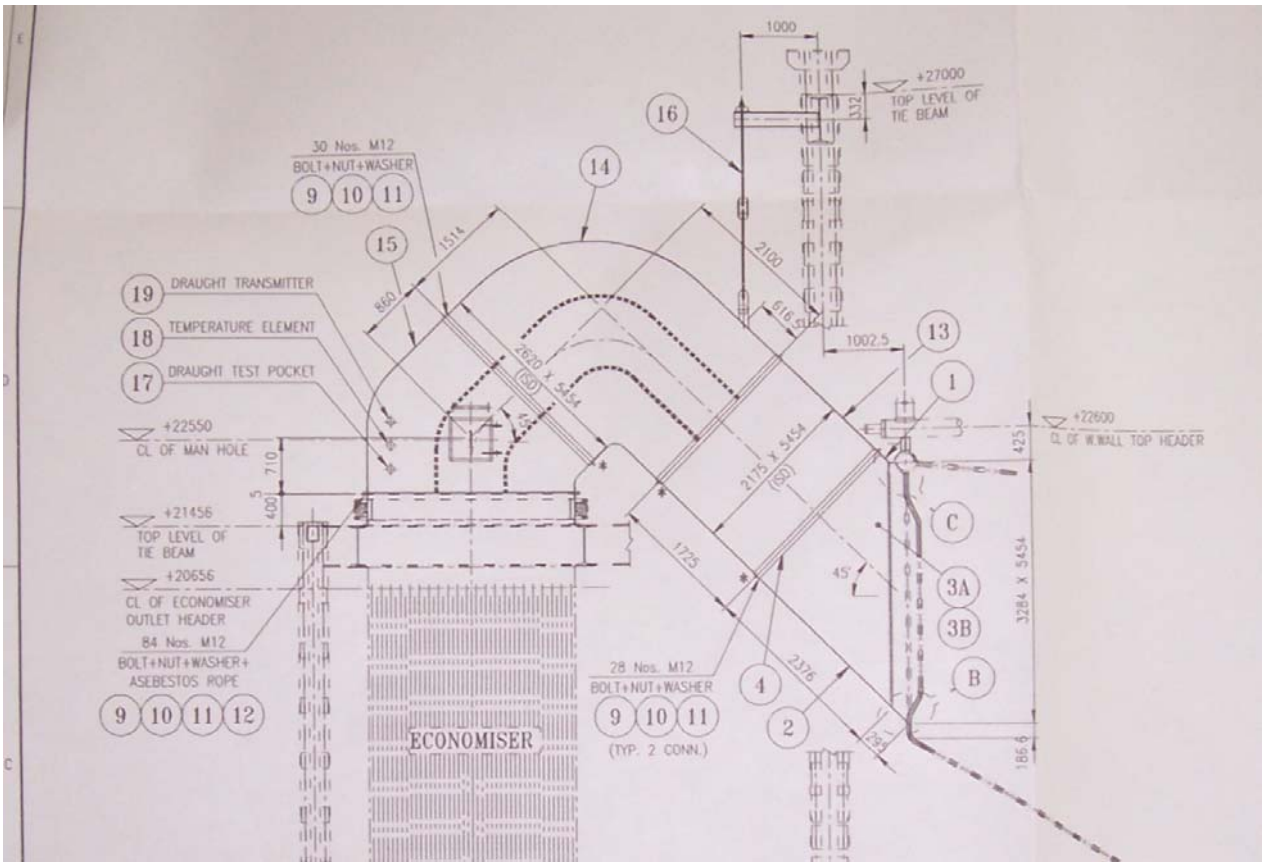


Photo 11: The hanger supports provided for economizer gas outlet duct are not loaded evenly. The link plates are not vertical proving the uneven loading.

Photo 12 & 13: Waterwall top header hangers are unevenly loaded. The link plate is not vertical. The sound of hanger rods when hammered is found to be different from each other.

Photo 13: Drum anchoring has to be in both in X & Y axes. Then only the expansion of drum will be identical on either side.

Photo 14. The hanger rod needs some clearance around it at the seat to permit deflection on expansion.

Photo 15: The boiler to economiser inlet fabric needs a rain guard. Any asbestos based expansion joint will fail on rain water damage.

Photo16. All the APH base supports are directly welded to insert plates on the RCC. This restricts the thermal expansion and this RCC may damage.

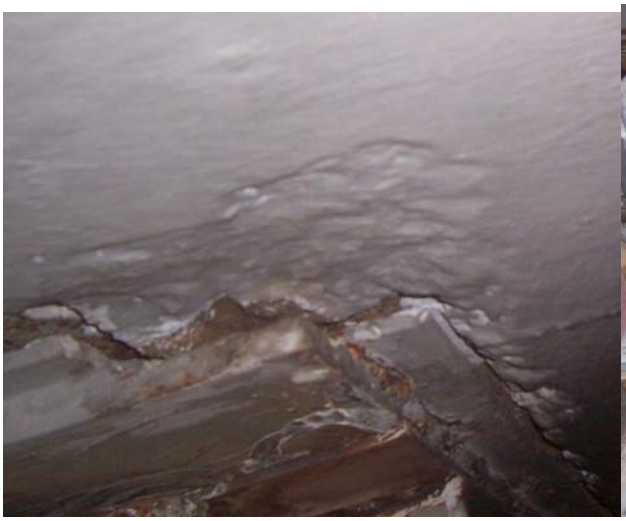

Photo 17,18 & 19: The air box thermal expansion pushes the insert plate. The airbox is also bottom supported. The RCC cracks due to this.

Photo 20. The ash hopper wall plate slopes are inadequate for complete discharge of ash from inside. There must have been a compromise on providing the required number of ash transmitters.

Photo 21. Today CFD has become a thrust area of energy conservation in terms of reducing unnecessary draft loss. But here, the PA duct bend is a right angle duct without a smooth bend.

Photo 22 & 23: The economiser support beams are directly welded to support columns in this design. Other reputed manufacturers allow free thermal expansion of Economiser / APH as shown on the photo on right. The manufacturer needs to update their design.

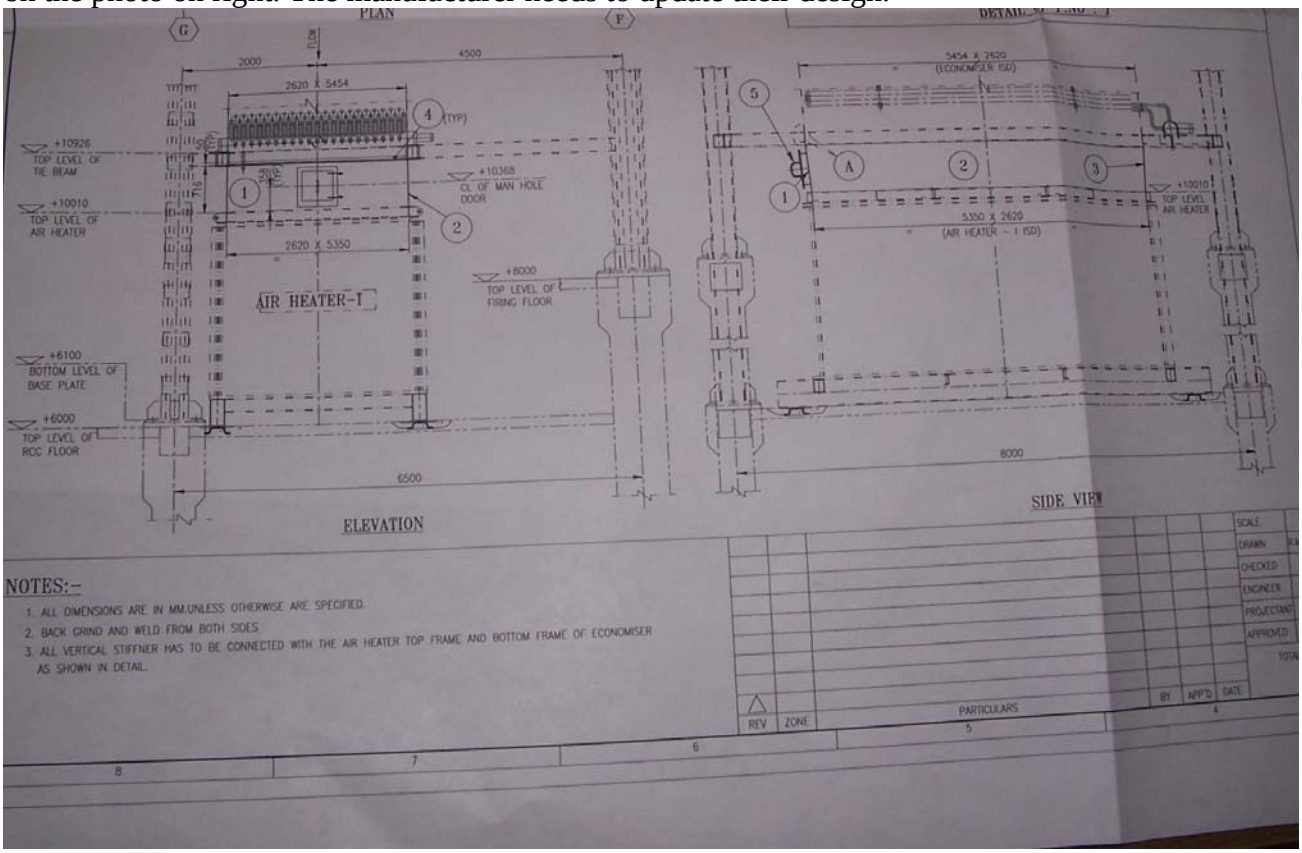


Photo 24: In between APH & economiser there is no expansion joint. As the APH expands upwards, the Economiser casing will be put under strain.

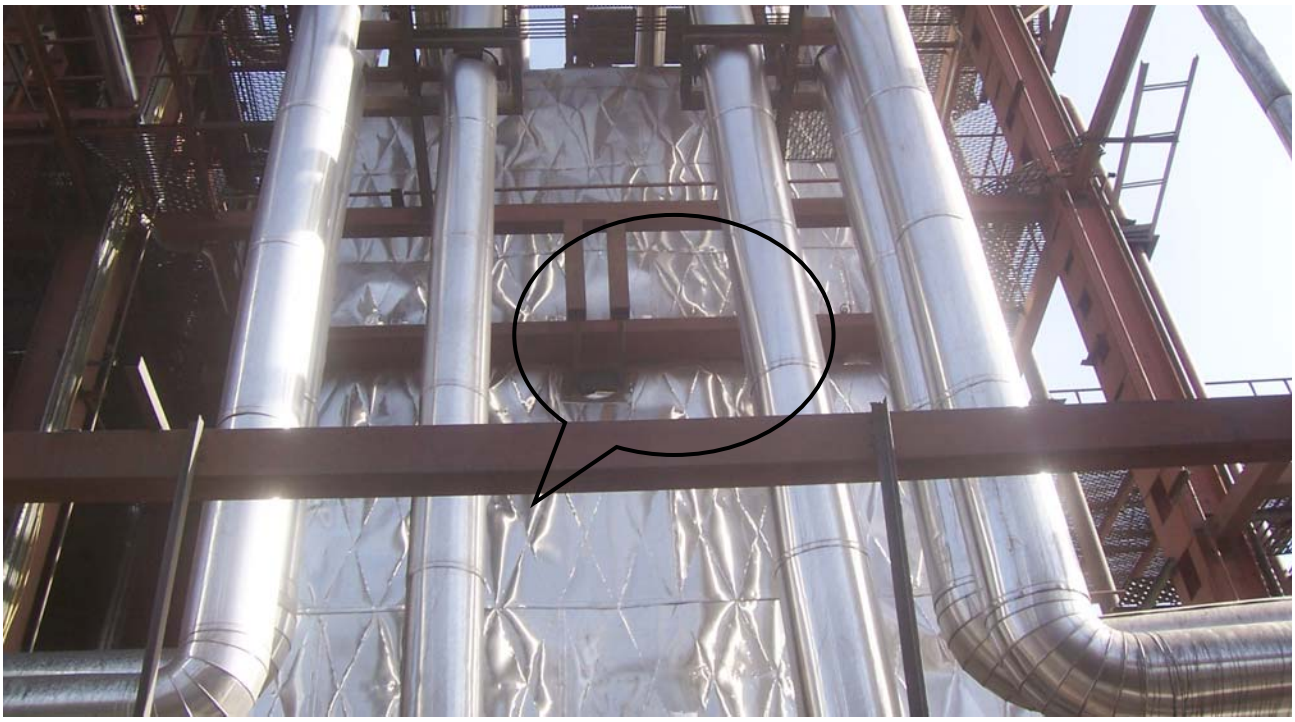

Photo 25: Boiler thermal expansion guide is not strong enough. This needs redesign.

Photo 26: Main steam header roller support is off the base. There is no jack arrangement to load in the support. Commissioning engineers are not trained enough to look into this aspects.

Photo 27 & 28: Piping supports are engineered to ensure piping deflects due to thermal expansion with minimum stress. Spring supports are supposed to be on a rigid base. But if the spring supports are on awkward supports, we can not ensure that the spring would offer the flexible support. Critical high temperature main steam piping is on flexible supporting system. There will be failures of piping at later date.

Photo 29: The constant load hanger support remained locked even after a month of boiler operation. There are many spring supports which are not unlocked / not preset before. There seems no protocol signed by commissioning engineer.

Photo 30: There is no insert plate on RCC to enable thermal expansion of deaerator on RCC pedestals. The coefficient of friction will be high between steel & RCC.

Photo 31: In cold condition itself some spring supports have crossed the load limits. The guide rod is bent. The lock is yet to be released. Many spring supports are like this. Commissioning engineer should submit a spring support commissioning protocol.

Photo 32: The CEP suction reducer is wrongly erected. Pump manufacturers recommend that the top of the pipe should be flat without a chance of air lock / cavity.

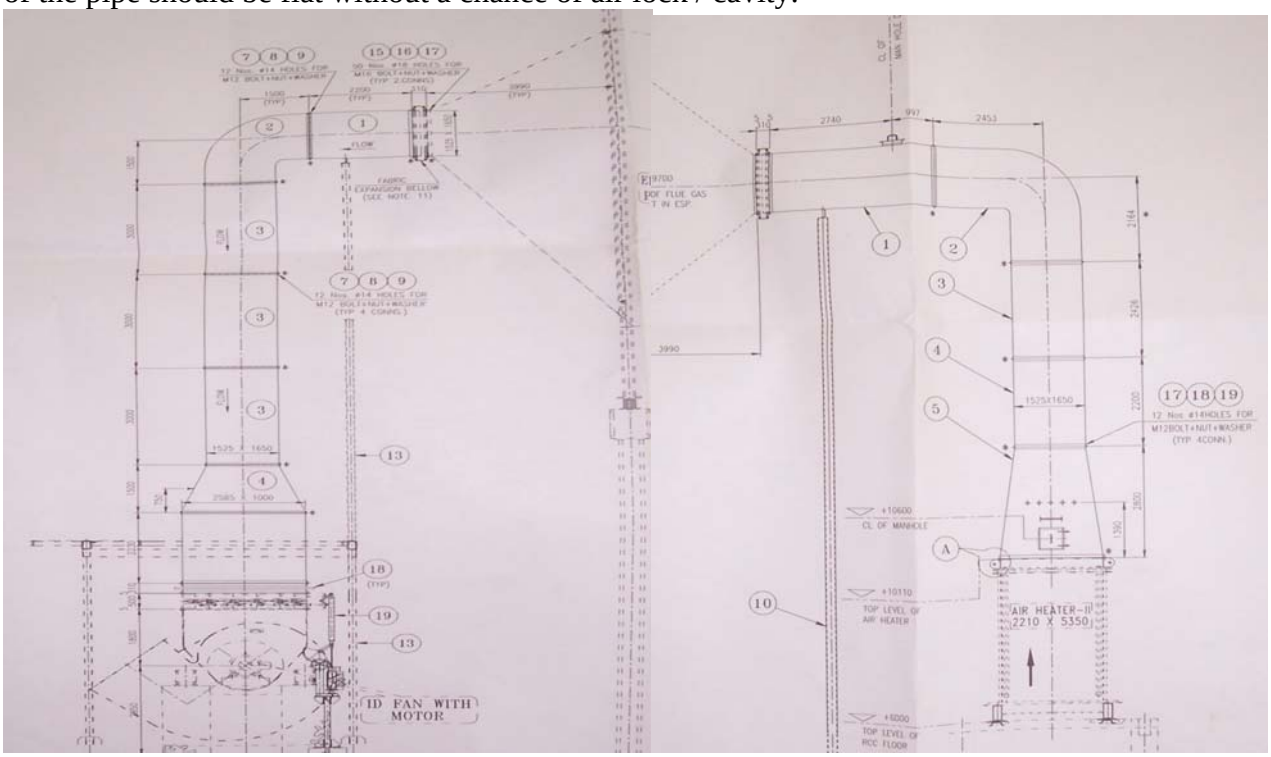


Photo 32 & 33: The ID inlet duct is provided with expansion joint to take care of downward expansion movement of inlet duct. The APH out let duct expansion is not taken care of this way.

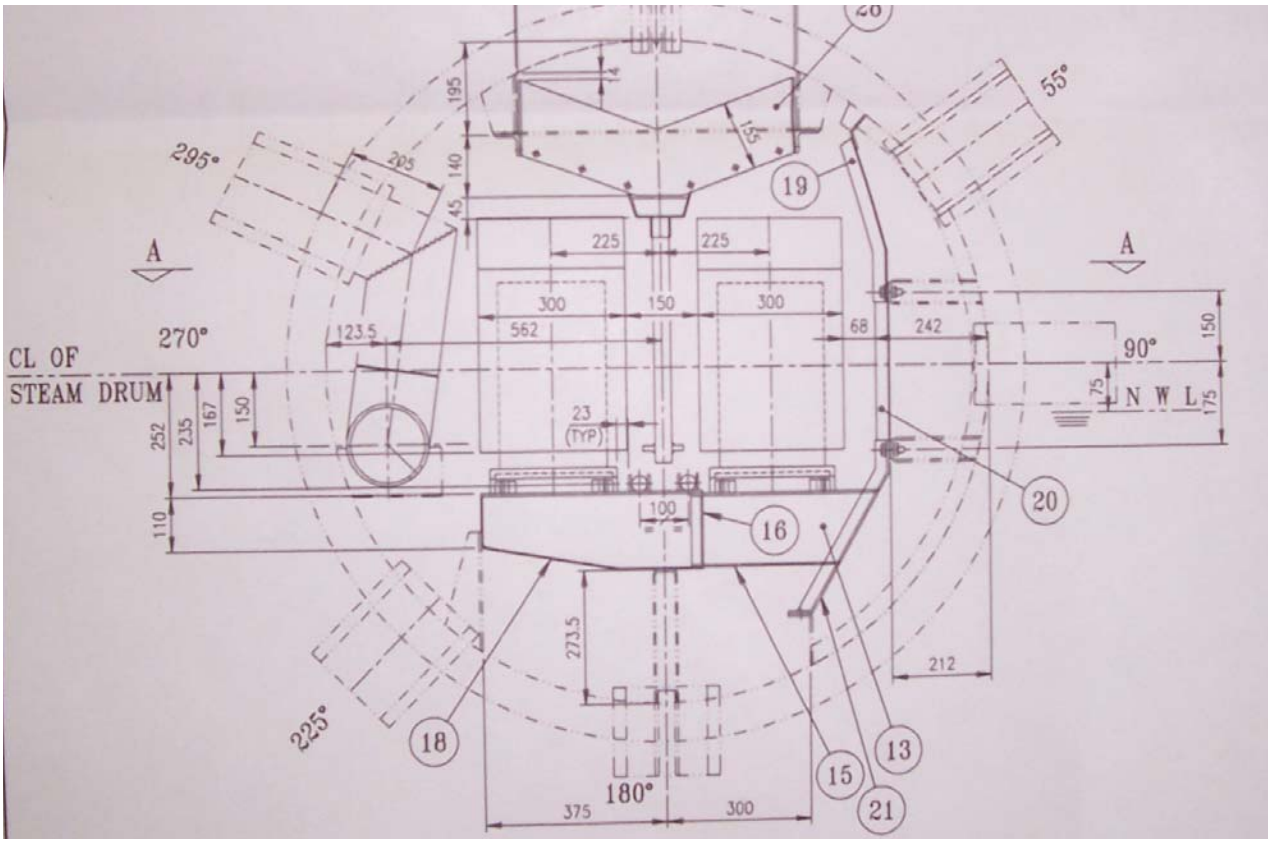


Photo 34: The CBD piping & HP chemical dosing piping are laid at 100 mm distance to each other. This leads to high pH / PO4 in water sample than what is in the bulk water. The HP dosing has to be shifted below the Feed distributor.

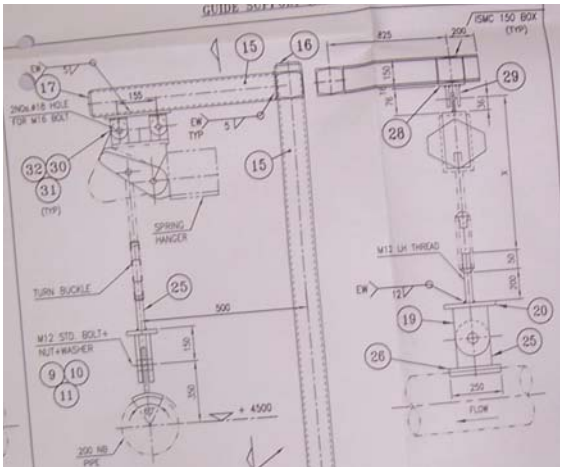

Photo 35: Supports in multi plane is seen in several places. Drawing itself envisages such supports. This supports can not offer a rigid base for the spring support.

**REPORT ON SHUT DOWN AUDIT OF 90 TPH AFBC BOILER**

The 90 TPH AFBC boiler was under shut down at the time of visit. The various systems of the boiler were inspected. The following are the observations & recommendations.

1. The fluidised bed was clean at the time of inspection. The bed coils were externally inspected for any sign of erosion. There were no marks of erosion, though there was no protection system such as shields or phoscast refractory. However there were marks of ash deposition / fouling above all fuel points. See the photographs 1, 2 & 3. At all fuel points the fouling of ash was seen to a radius of 250 mm. The fuel used has a low ash fusion temperature.
2. The bed material which was drained from the bed was available for inspection. It did not contain any clinker. The bed temperature readings were found to be just 875 – 900 deg C. The load on the boiler was also confirmed to be less than MCR load. Hence there is a need to analyze the coal on a regular basis for ash fusion temperatures such as initial deformation, softening and fusion temperatures. It is advised to check for every lot of coal consignment received at site. It is recommended to check the ash chemical composition so that any abnormal iron ingress can be monitored.
3. The bed coil thickness was measured at $12^0$ clock position at the lower part of the coils, where caustic gouging phenomenon was experienced earlier. The readings did not indicate any such phenomenon. As the measurement was found to be difficult, sampling was done only at 3 locations above fuel feed points.
4. It was informed that the boiler water pH & phosphate were maintained properly after the first failure. The drum was opened and inspected. The photographs taken (see enclosed photo 4 to 7) revealed that the boiler is yet subject to corrosion. The color of the drum in the water zone is still reddish. The drum internal design needs to be changed to correct this. Right now the chemical dosed can easily go to CBD line as the two lines are close to each other. By this, the sample drawn from CBD will always indicate higher $PO_4$ & pH as compared to circulating water. The chemical dosing line can be brought under the feed water distributor. See photograph no 8 for a good drum of another manufacturer with right type internal.
5. The internal of deaerator was inspected. The feed water box support was in adequate. The two tubular supports, additional venting done at manhole seemed to have helped to tide over the Oxygen related corrosion. Looking at the design it is found there is no water removal arrangement from the perforated air vent chamber. At least a 'U' loop can be provided to drain off the water from air vent chamber. A better design of this air vent chamber is to extend up to top of dished end so that the feed water box bottom plate gets an inner support. Also it is possible to accommodate a vent condensing arrangement as illustrated in figure 1.
6. It was confirmed that the feed water temperature could be maintained at 105 deg C after the additional vent was incorporated at the deaerator tower manhole. The steam drum did not seem to contain oxidation product in the water. The drum level mark was fairly normal indicating there was not much of suspended matter which was created by iron oxides from feed water system. As the economizer failures did not occur again we can presume that the deaerator temperature was maintained and the chemical oxygen scavenging was satisfactory.
7. The APH erosion was seen in the lower block. The cause for the failure was the excessive tube to casing plate clearance. See photograph 14. As the flue gas tends to go through the excessive gap, the erosion is also more. The tube had thinned down at $3^o$ clock position that is facing the casing. The idea of plugging the tube increases the pressure drop to some extent. But yet it may not affect the boiler steam generation, In future if the tubes are replaced at this place, the failure can not be prevented. It is better to leave the tubes as sacrificial tubes. When the tubes loose their shape, they must be replaced. Gas baffles can be provided at the entry and at exit as it is done at economizer inlet and as shown in figure 2.

8. It was seen the many birds have come through the FD fan and plugged the I pass of the APH tubes. See photograph 15. The dead birds must be removed as otherwise the draft loss across APH will be more.
9. It was observed that the APH outlet duct to APH tube sheet welding was partly complete. This leads to leakage of hot air to outside. See photograph 21. Hence the welding must be completed.
10. The economizer is found to be eroding. The reason for the erosion could be the high gas velocity adopted. The top baffles provided by manufacturer to prevent bypassing of gas through the end gaps are not fully welded to casing. The width of the baffles shall be 100 mm only. Presently it is more than 200 mm reducing the gas flow area. The baffles are not to be too close the tubes. As the ash stocks and falls off from the baffle, the flue gas tends to cut the tube. It is necessary to leave a gap of 100 mm above the tubes. Also the tubes need shields for erosion protection as shown in the figure 2.
11. The tubes are arranged in staggered manner at economizer. Only the top rows of tubes are provided with impingement erosion shields. With staggered pitch, the second rows of the tubes are to be protected with shields too. See photograph 17.
12. The tube bends of economizer were found to be eroding in between the banks. The tubes can be provided with cassette baffles as shown in the figure 2.
13. It is seen that the bed ash is being screened manually. It is recommended to use mechanized system so that the bed material specification can be easily adhered to.
14. The fabric expansion joint at water wall to wind box was found to be taut indicating the filling of the bed material. Wherever it is taut, the bed material shall be removed to avoid distortion / failure of windbox supports as the boiler expands down. Thermal expansion loads are of very high order when they are prevented. See photograph 12.
15. There were ash accumulations in convection superheater area over the nose panel. This shall be cleaned. See photograph 13. The present design of the ducting system needs to be addressed by manufacturer.
16. The waterwall outlet duct to economizer duct is found to be distorted as the fabric expansion joint filled with ash. The fabric expansion joint needs to be cleared of ash to permit the thermal expansion of the boiler. See photograph 16.
17. There was no manhole at the APH outlet gas duct. A manhole shall be introduced to facilitate inspection. See photograph 20.
18. At many places manholes are buried inside the insulation. See photograph 20.
19. The economizer casing is leaking in many places. When the economizer was repaired for the joint leakage, the welding is not completed. The outside air goes in to the system loading ID fan. See photograph 18 & 19 for samples.

---

ANNEXURE for case study 3

Photo 1-3: Photos above illustrate the ash fouling above coal nozzles. Blunting of outer studs is seen.

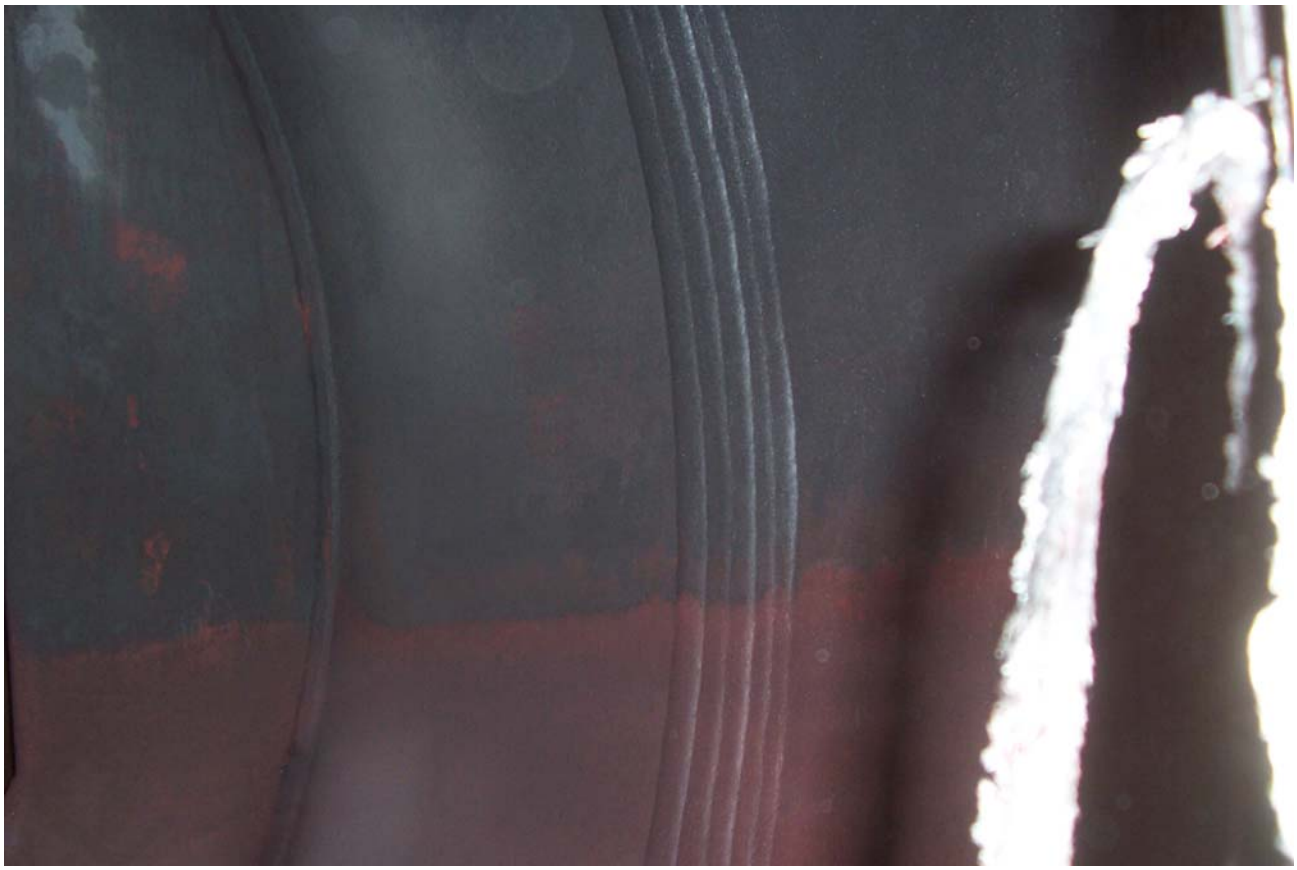

Photo 4 & 5: Photos above illustrate the boiler is corroding. The distinguished red color in water space proves the boiler water chemistry regime is not OK.

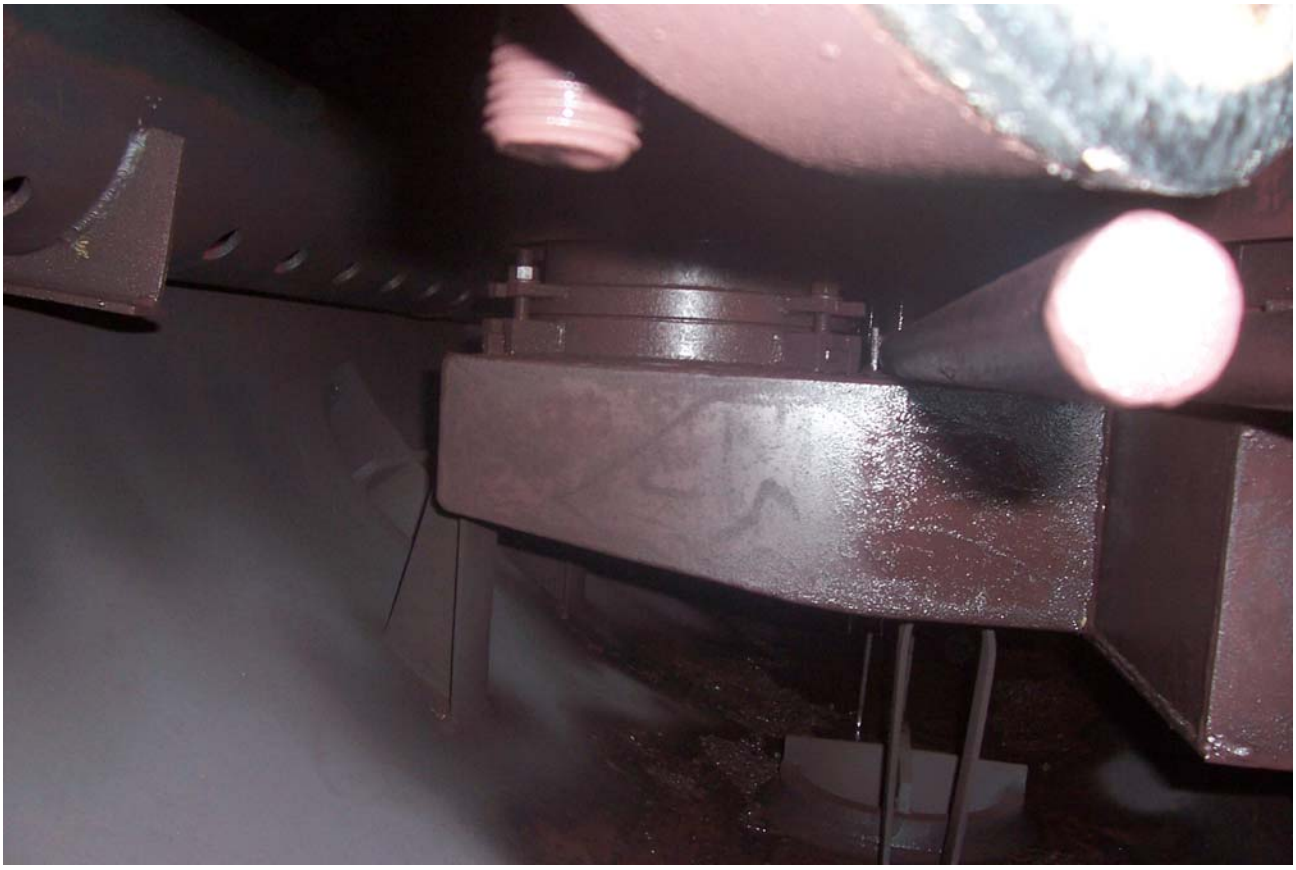

Photo 6-7: Loose corrosion products are seen inside. This must be from previous regime of operation in which pH & O2 were not controlled. O2 could not be controlled as the deaerator water chamber failed. The uniform corrosion due to low pH water is seen by a rub off.

Photo 8 & 9: The top photo is a drum with proper internal arrangement showing the dark grey magnetite layer of steel. The bottom photo is what was observed earlier when the pH was not under control. The drum surface is comparatively better this time.

Photo 10 & 11: The two photos indicate that the feed water pH was OK. The utter reddish surface is not seen. Also the clear tray indicates there is no transportation of corroded steel to boiler.

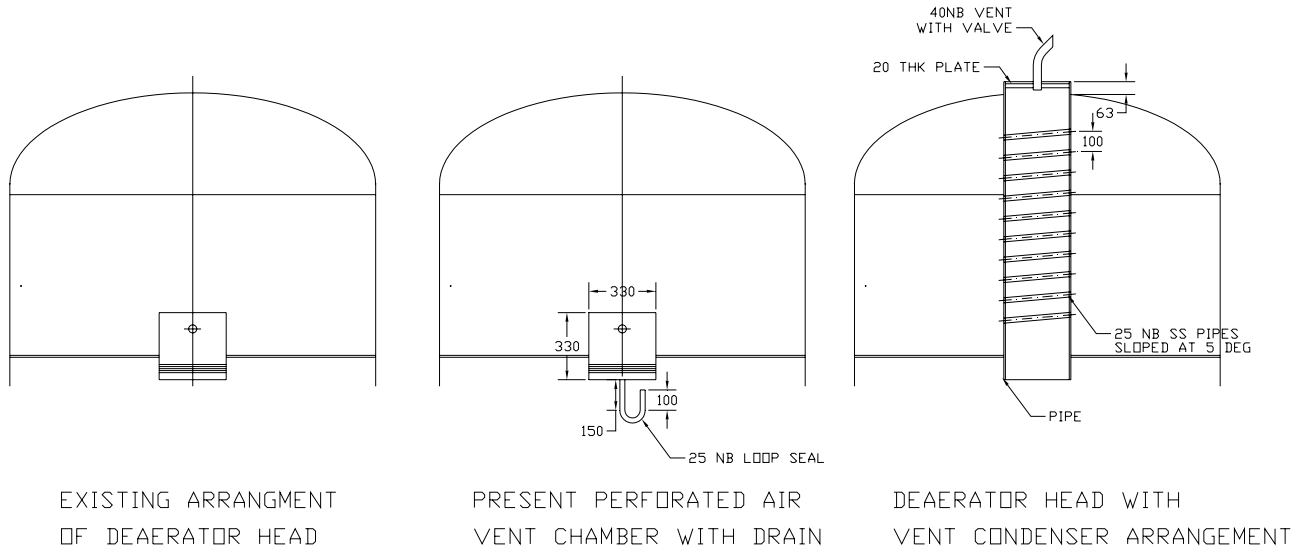


Figure 1: The deaerator air vent chamber needs a drain pipe system to remove the water that will form inside the chamber as the vent steam passes. A 'U' loop seal shall be provided with a 25 nb pipe as shown above. A vent condenser is recommended as shown from steam saving point of view.

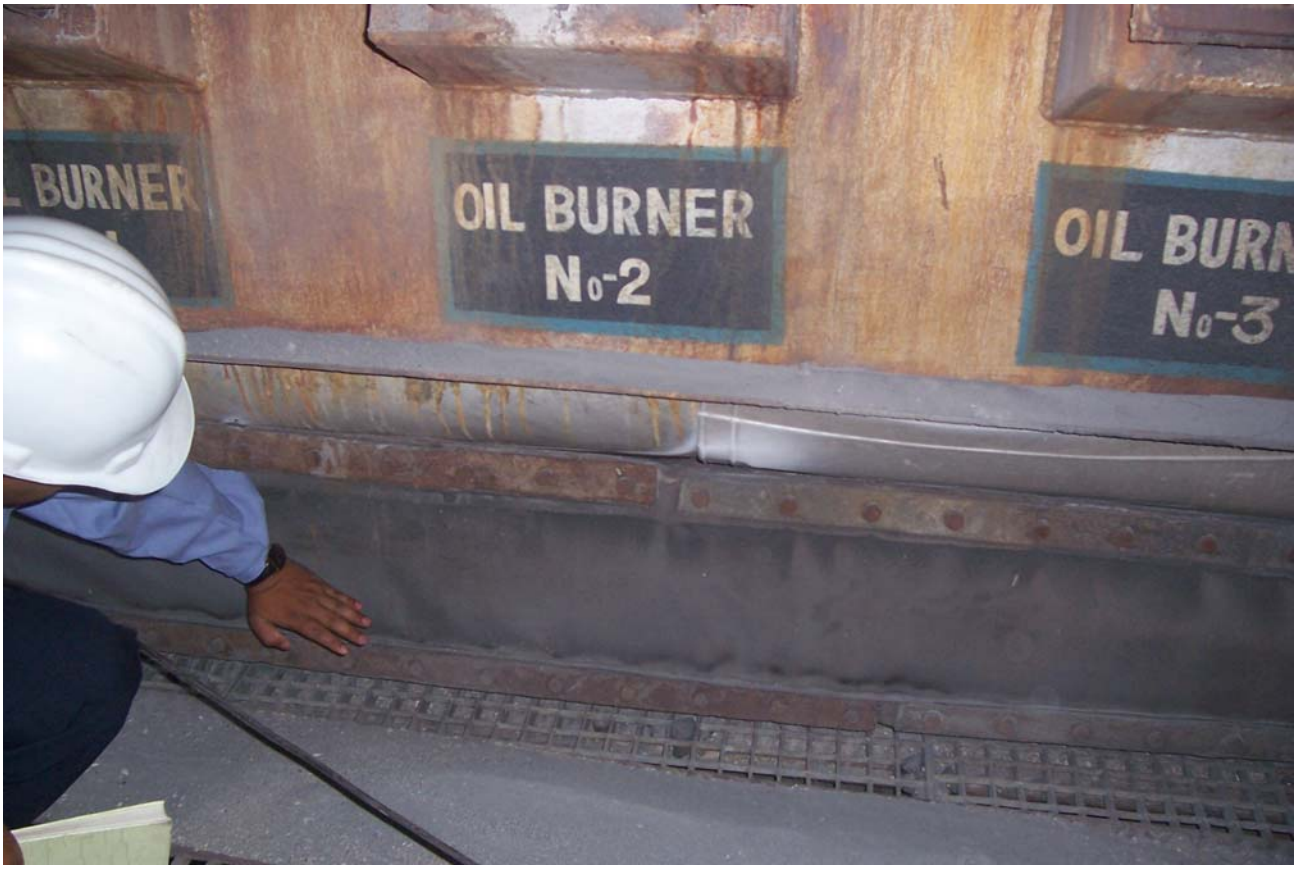


Photo12. The waterwall to windbox expansion joint was taut at some places. The accumulated bed material must be cleared.

Photo 13: There is quite a good amount of ash accumulations seen in superheater area

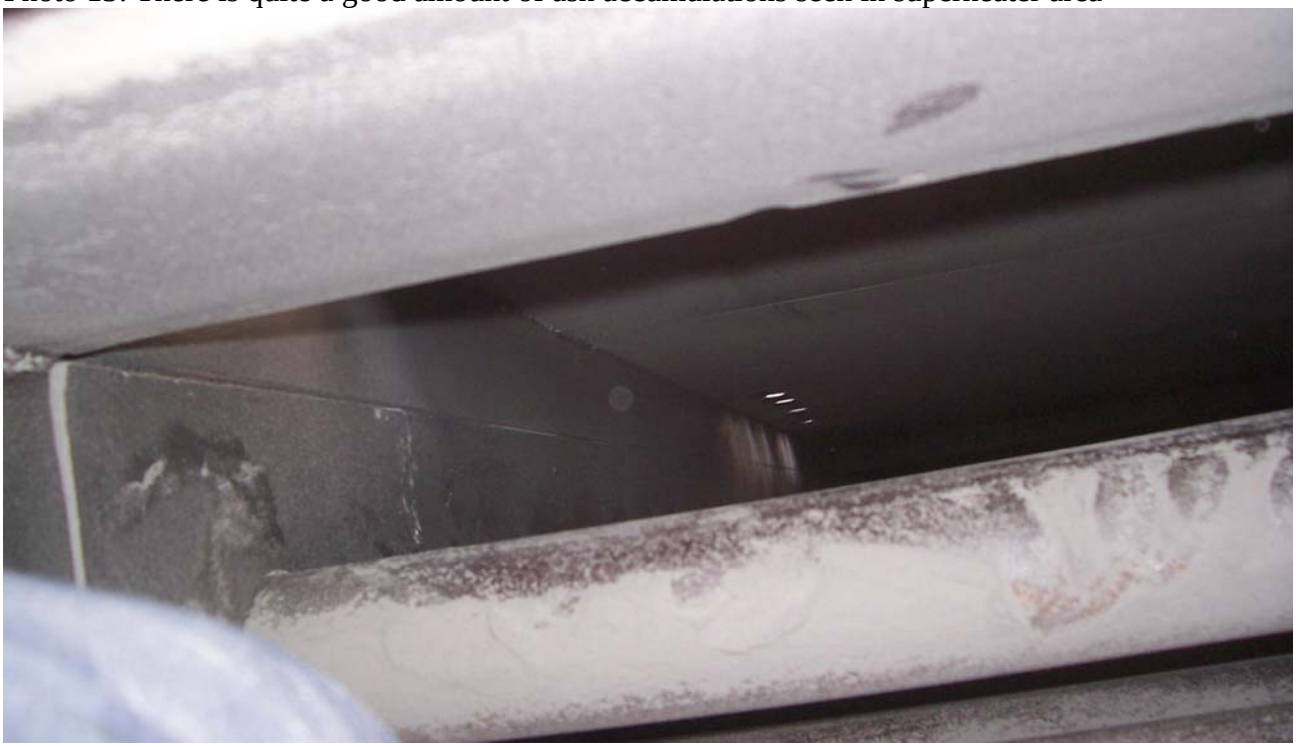

Photo14. The APH end tube to casing clearance is about 100 mm. Due to excessive gap the gas had bypassed and eroded the tube surface that is facing the casing.

Photo 15: The APH air side tubes are blocked by the dead birds. This has to be cleared to permit the free air passage.

Photo16. The water wall to economizer duct is distorted as the thermal expansion is prevented due to ash filling at fabric expansion joint. This can be avoided by addressing at design change. This may be referred to manufacturer.

Photo 17: The top row of economizer tubes are provided with impingement shields. The second row is not provided with such an arrangement. The polishing of tubes are seen in the second row.

Photo18. Lot of welding work is found to be left out while the economizer was repaired. All the leakages shall be arrested.

Photo 19. The welding of economizer casing is pending leading to outside air ingress in to the economizer.

Photo 20. It is found that the manufacturer had not provided handles in the manhole doors to facilitate easy access inside. Also the frame is inside the insulation itself. The frame has to be out of insulation

Photo 21: APH outlet duct is only stitch welded at erection stage itself. The field quality inspection system is missing. The hot air is leaking to outside.

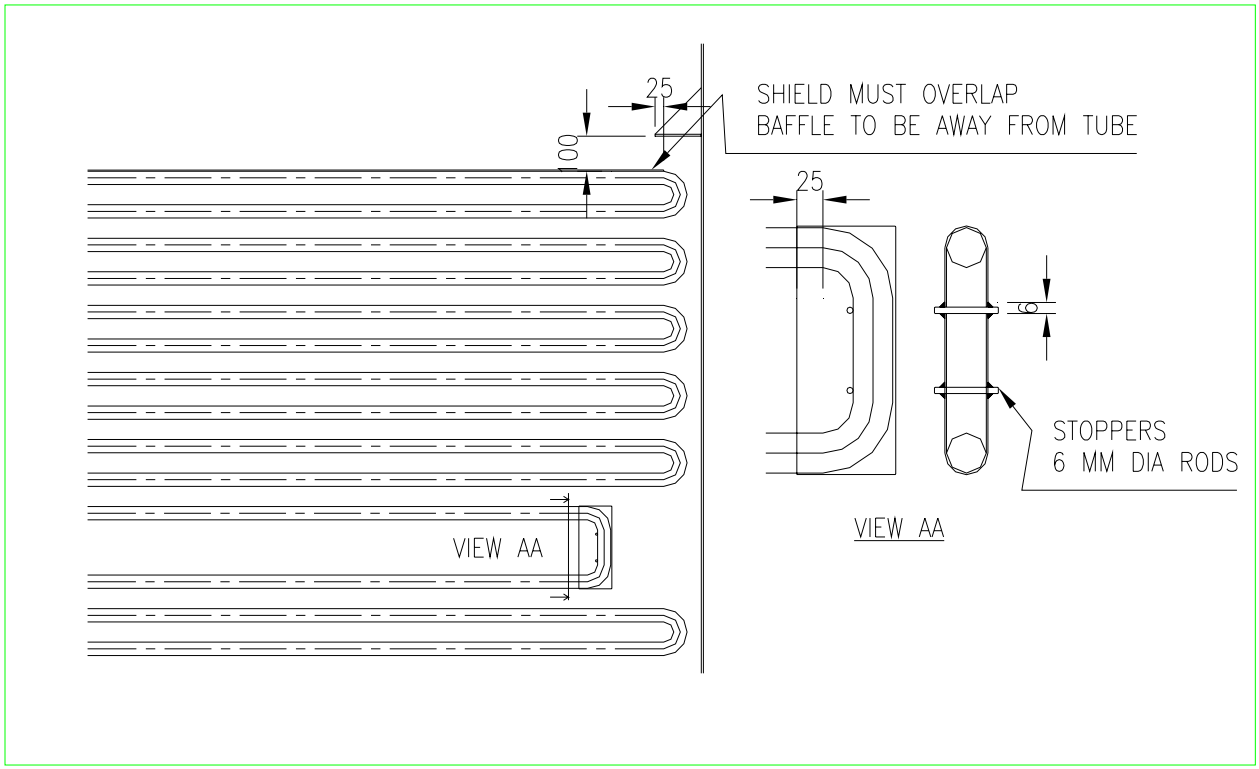


Figure 2: Economizer to be given baffles as shown in future.

# TIPS TO IMPROVE AVAILABILITY & EFFICIENCY OF YOUR ATMOSPHERIC BUBBLING FLUIDISED BED COMBUSTION BOILERS

The fluidized bed combustion technology has been now well accepted by the users across the country for different solid fuels. There are installations for mixed fuel firing & even gaseous / liquid fuels co-firing. Across the country there are lot of engineers and boiler operators who have learnt this technology. Yet the technical tips of FBC operation may not have reached all. This is a sincere effort to throw more light to the behavior of FBC to the benefit of boiler users.

## *A BRUSH UP ON FUNDAMENTALS*

### *WHAT IS FLUDISED BED?*

When air or gas is passed through an inert bed of solid particles such as sand supported on a perforated plate, the air, initially, will seek a path of least resistance and pass upward through the sand. With further increase in the velocity, the air starts bubbling through the bed and the particles attain a state of high turbulence. Under such conditions, the bed assumes the appearance of a fluid and exhibits the properties associated with a fluid and hence the name 'Fluidised Bed'.

### *MECHANISM OF FLUDISED BED COMBUSTION*

If the sand, in a fluidised state, is heated to the ignition temperature of the fuel and the fuel is injected continuously into the bed, the fuel will burn rapidly and the bed attains a uniform temperature due to effective mixing. This, in short, is fluidised bed combustion.

While it is essential that temperature of bed should be at least equal to ignition temperature of fuel and it should never be allowed to approach ash fusion temperature (1050°C to 1150°C) to avoid melting of ash. This is achieved by extracting heat from the bed by through evaporator tubes immersed in the bed.

If velocity is too low, fluidisation will not occur, and if the gas velocity becomes too high, the particles will be entrained in the gas stream and lost. Hence, to sustain stable operation of the bed, it must be ensured that gas velocity is maintained between minimum fluidisation velocity and particle entrainment velocity.

### *DESIGN OF FLUDISED BED*

Based on the boiler heat duty, the amount of fuel to be burnt is decided. Based on chemical constituent of fuel, the air required for combustion is calculated. As the combustion takes place in the bed all the heat is released within the bed. The heat is extracted out of the bed by the leaving flue gases and the bed evaporator tubes. The bed cross sectional area is fixed based on the fluidisation velocity which will not exceed 2.8m/s. Once the bed coil area and bed cross sectional area is decided it is clear turndown becomes difficult. Because lower the heat release rate, lower will be the bed temperature. Hence by reducing the bed height, the bed HTA immersed in bed is reduced. Thus the bed temperature is still ensured for steady fuel combustion. Additionally compartmentalisation is done to ensure the minimum fluidization is achieved. The fuel feed and air feed are turned off in the slumped bed.

### *OVERBED & UNDERBED FUEL FEEDING ARRANGEMENTS*

Any time underbed feeding is superior in terms of combustion efficiency. Underbed is best suited for fuels which have higher carbon content, such as Australian & African coals. The excess air requirement is more in Overbed feeding arrangements. In overbed feeding arrangement elutriation losses would be more. Hence underbed is preferred by many boiler buyers.

### FINE TUNING THE FLUDISED BED COMBUSTION BOILERS

The design of Fluidised bed combustion boiler has lot to do with the fuel type and the fuel conditions. The fuel itself may change since the purchase of the boiler. A design based on certain fuel / fuel combinations is not at its optimum when it comes to other fuels. This is specifically true when the boiler is changed from agro fuels to coal. Similarly change in operating loads may also warrant fine tuning of the boiler operational parameters. There are cases where the boiler is specifically oversized considering the future expansion. In such a case the bed area and bed coil area may have to be covered up until the steam requirement increases. The air requirement and flue gas to be handled becomes less. Use of VFD / use of smaller capacity fans would benefit the user in terms of power saving and operational efficiency. Like this there are lot of possibilities for a review of the original design to present operating conditions.

### *TIPS FOR IMPROVEMENT IN OPERATIONS / MODIFICATIONS FOR IMPROVEMENT*

In the following pages the tips are explained with illustrations as necessary. The tips are based in the operational experience of several make of FBC boilers in India. Some of the tips would certainly benefit some boiler users. There is always a solution born to every problem experienced. In the continual improvement of the design / Operation of the FBC boilers there is always scope for additions to this list.

**TIP 1 –Measure and maintain adequate Distributor plate drop**

The quality of fluidisation should be good ensuring there are no defluidised zones. This can not be ensured by visual means. The distributor plate pressure drop becomes a vital factor to ensure this. When the DP drop is less than 75 mmwc, the coarse particles begin to settle down at the bed bottom. In an ideal case, DP drop should be 1/3 rd of bed height. Defluidization or settlement of coarse particles will not be visible from top of the bed, as the fine bed material would continue to fluidise. Settling of coarse particles can also damage bed coils. This leads to localised erosion of bed tubes. This can happen even in overfed FBC boilers. Providing studs does not help. Bed coil erosion continues. See figure 1.

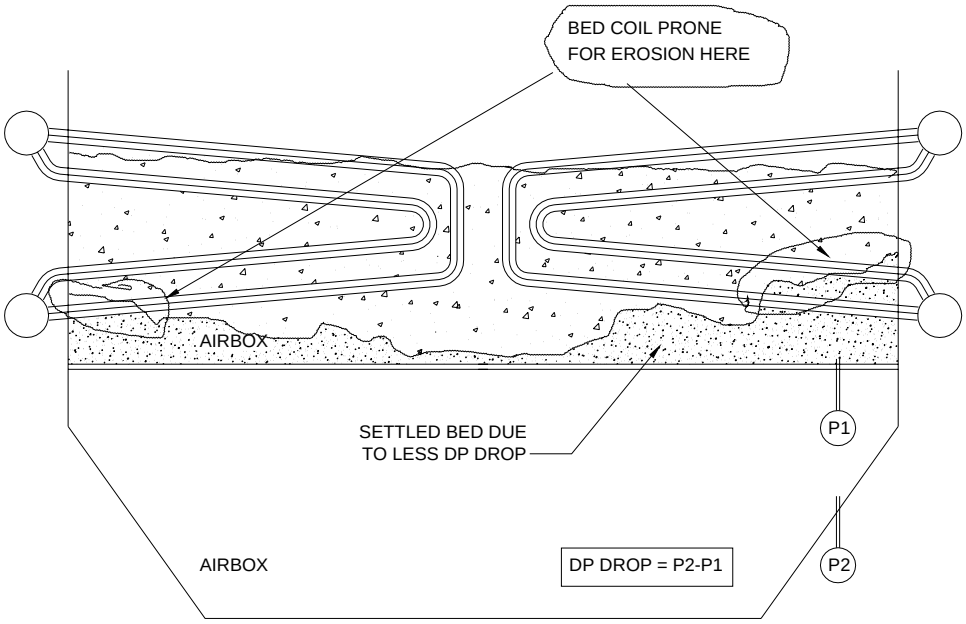


FIG 1: WHEN DP DROP IS LESS BED COARSE PARTICES SETTLE AT BOTTOM OF BED

**TIP 2 – Check bed coil pitch for studded bed coils**

Studs can increase protection against gross erosion but not localised erosion. Studs decrease the clearance between adjacent bed coils. Spacing of coils is to be specially addressed if studding is opted for. The Increased fluidisation velocity at narrow clearances decreases the life of the bed coils.

**TIP 3- Consider reduction of bed size**

When the steam demand is less, the bed area becomes oversized. Maintaining a minimum pressure drop for fluidisation would be difficult. The boiler operators continue to maintain high excess air level to avoid bed slumping. In many process boilers this is the case due to oversized boiler (planned considering future steam requirement) See figure 2. It is necessary to reduce the bed area by blocking nozzles and by construction of refractory walls.

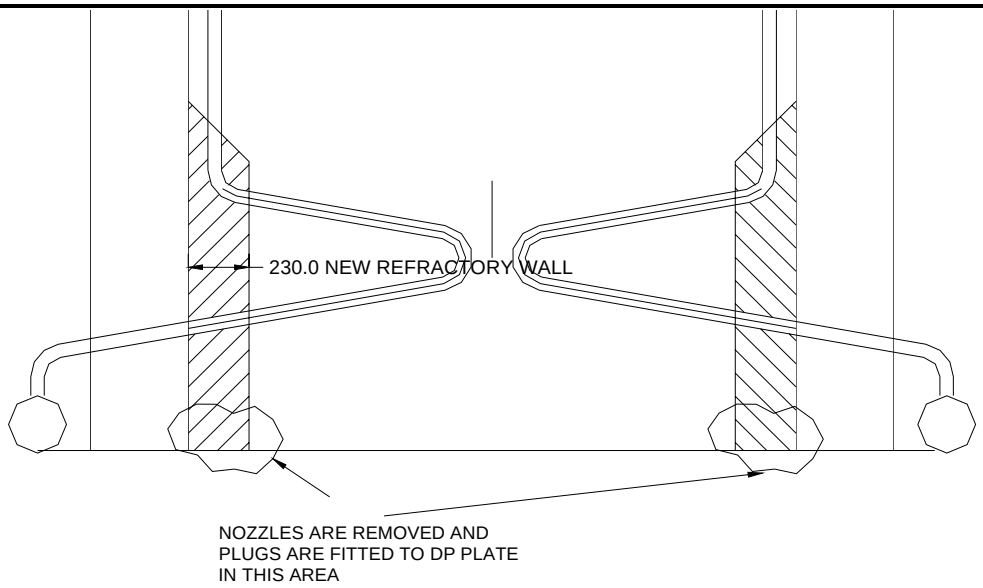


**FIGURE 2. BED AREA REDUCTION TO SUIT THE REDUCED STEAM GENERATION REQUIREMENT**

## TIP 4 - Inadequate instrumentation

Some manufacturers do not provide draft gauges / manometers for indication of bed pressure. In such cases, the operators do not get an idea on bed height. Knowing air box pressure alone does not tell what the bed height is. It may be possible that fluidising air is more and the bed height is less. More fluidising air leads to excess air operation. This affects the bed coil life. See figure 3.

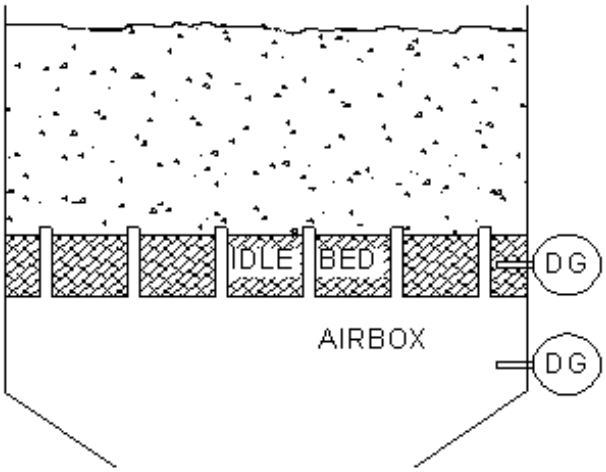


FIG 3: BED HEIGHT & AIRBOX INSTRUMENTATION

**TIP 5 - Care of idle bed**

At times it may be necessary to reduce the steam production rate. This is done by slumping compartments. Continued operation of slumped bed may result in shallow bed height in the operating compartment and leads to defluidization. This happens particularly when bed size is smaller. The bed height in operating bed becomes less when it spills to adjacent slumped compartment. See figure 4. It becomes necessary to alternately activate the slumped bed to bring the bed height back to normal. There are other reasons as well. See the further tips.

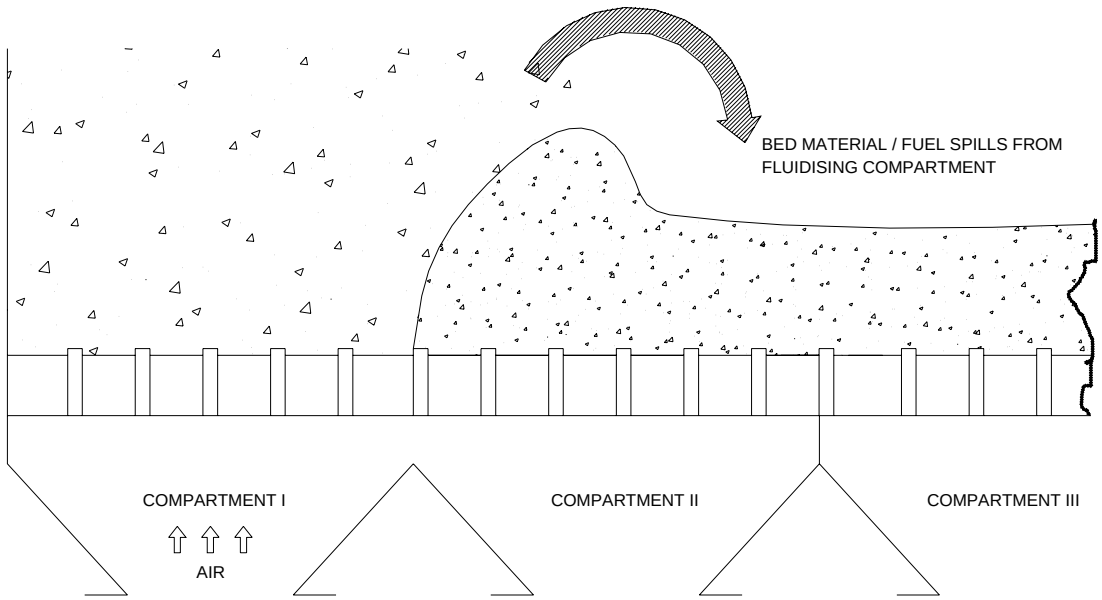


FIGURE 4. BED MATERIAL SPILLAGE TO IDLE COMPARTMENT

**TIP 6 Provide additional drain points**

Heavy stones and heavy ash particles keep accumulating at the bottom of bed. Larger beds need more ash drain points in order to ensure coarse ash particles, which settle at the bottom can be effectively removed. If drain points are inadequate or if all the available drain points are not used, small clinkers would form and grow big. The ash draining will be effective in open bottom fluidised beds. The ash draining must be kept partially opened to allow gradual discharge of ash from the bed. This way it is found to remove most of the coarse particles that settle at the bottom.

In overbed feeding arrangement coarser particles would settle near fuel feed points. Provide additional ash drain points at these locations to remove the stones / heavy particles.

**TIP 7- Care for idle bed**

Slumping of the bed is done to meet the steam demand. It is not correct to keep same compartment under slumped condition. In the slumped bed heat transfer to bed coil becomes less. The circulation of water ceases. This may result in high pH corrosion / caustic gouging/ settling of iron oxides / corrosion products in such bed coils, depending on boiler water chemistry. See figure 5, for appearance of tube inside on a caustic gouging failure.

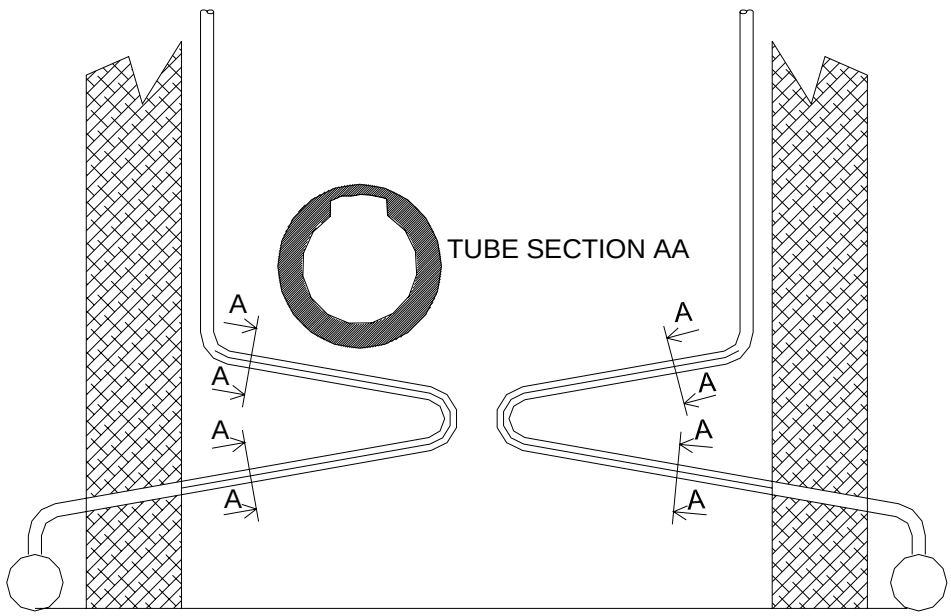


**FIGURE 5. CAUSTIC GOUGING ATTACK IN IDLE COMPARTMENT**

**TIP 8 - Use Optimum primary air pressure**

Primary air fans are required for underfeed system. The PA fans are selected with 15% - 25 % flow margins. It is necessary to keep the PA header pressure as low as possible so that the suction effect is just the minimum at the throat. The air leakage from the feeder must be taken as a guide. Higher PA header pressure leads to more air flow through the fuel feed points. Higher air flow would erode the bed coils faster. It addition venturi erosion would be faster.

**TIP 9 – Care for shutting PA damper in idle bed**

In underbed feeding arrangements there is no physical partition above the distributor plate. When a compartment is slumped for load control, particularly for longer duration, it is necessary to close the PA damper in slumped compartments. Leaving the primary air full open in idle compartment would lead to bed coil erosion. It is the tendency of many operators to leave open the PA line dampers, for the fear of line choking. The bed material is continuously thrown at bed coil.

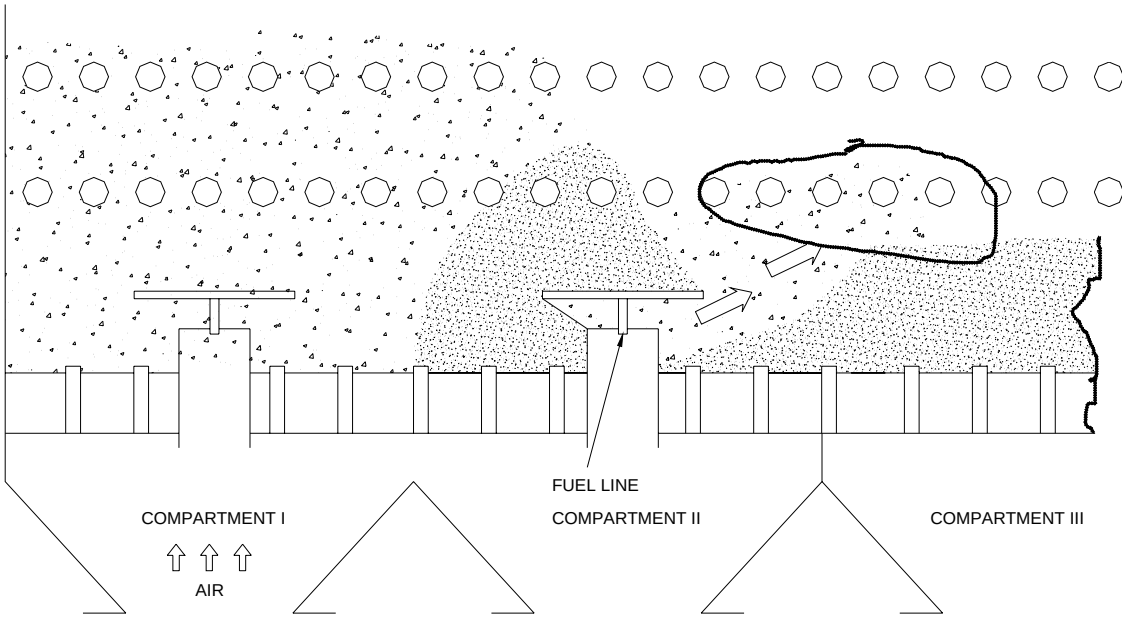


FIGURE 6. FUEL LINE AIR ERODING AWAY BED COIL IN IDLE COMPARTMENT

**TIP 10 – Replace the Worn-out venturi / mixing nozzles promptly**

In underfeed arrangement the fuel is fed from bottom of the bed. As the pressure at the feed point inside the bed is 400 -500 mmwc, high pressure PA fan with mixing nozzles are used to transport the fuel inside. The air jet velocity at the throat of the mixing nozzle is of the order of 100 – 130 m/s. The fuel particles are accelerated at the mixing chamber and the diffuser ensures the gradual return to normal line velocity. The diffuser erodes over a period (1-2 year). As the pressure drop of mixing nozzle increases more and more air is required for generating suction at the throat. Naturally the erosion rate of bed coil will be more inside the bed.

**TIP 11- Care to use the air vent valve in idle compartment**

Slumping of a compartment is necessary to take care of load reduction and while start up of the combustor. There can be clinker formation if the fuel spillage is present in the idle compartment. In certain boilers, the fuel feed point may be close to the border of the adjacent compartment. For the clinker to take place there should be air flow in the idle compartment. The compartment dampers may not be leak proof. For this reason, automatic air vent valves are provided in compartment air box, to enable venting the passing air from compartment damper. If the valves are to be manually operated, the same must be done. Needless to say, that the leaky damper will have to be attended.

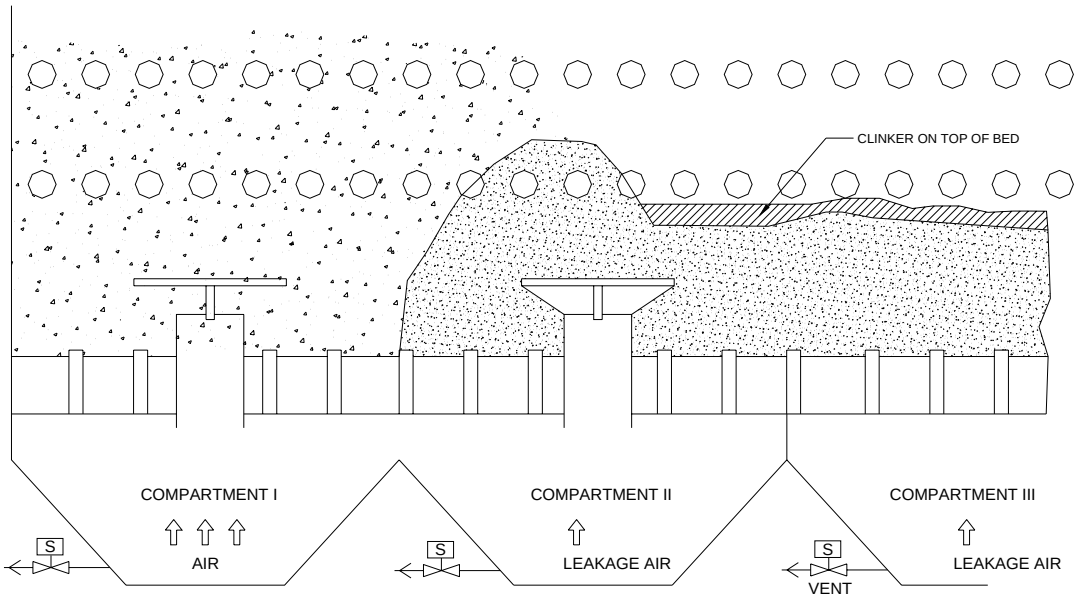


FIGURE 7 : FUEL SPILLAGE AND LEAKAGE AIR IN IDLE COMPARTMENT CAUSING CLINKERS

**TIP 12-Avoid continued operation with troubled bed**

A fluidised bed may get clinkered when there are disturbances in boiler operation. For example when there is no coal in bunker, the operator momentarily reduces the air flow in order to reduce the bed quenching. At this time, it is likely the bed defludises at some zones. The average particle size is always high compared to start up bed material and hence defluidization chances are more when the air flow is reduced. Once the bed is known to have clinkered, steps are to be taken for immediate removal. This may be possible by increasing the drain rate from the clinkered bed. A bed clinkering can be figured out from the differences between the bottom and top bed temperature readings.

**TIP 13- Ensure proper fuel particle size**

Improper fuel sizing affects the bed particle size. Improper screen cloth sizing, coarse particle separation in bunker, worn out crusher hammers can lead to oversized fuel particles. Oversized fuel particles are found to accumulate near the fuel feed points leading to defluidization. The air jets upwards once this happens. Bed coils erode locally above the fuel feed point at this time. See figure 8.

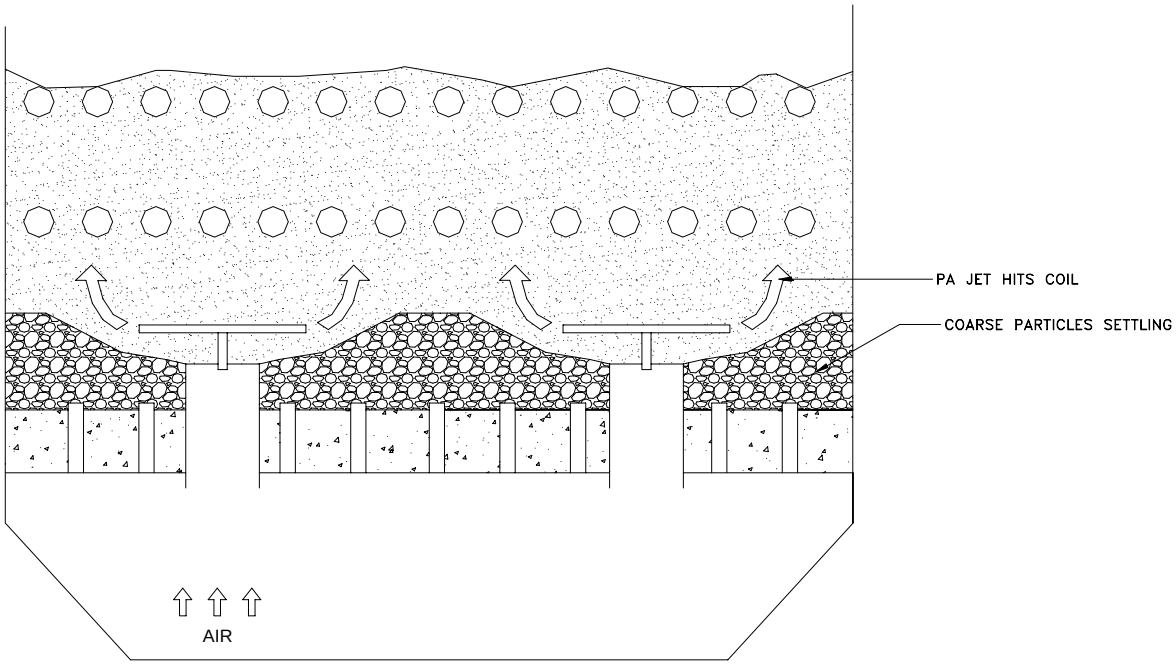


FIGURE 8 : COARSE PARTICLES SETTLING AROUND FUEL NOZZLE AND PA JET HITTING BED COIL

**TIP 14 - Attend to Loose air nozzles**

Some manufacturers adopt push fit nozzles over the distributor plate. Further a castable refractory is laid over the plate. The castable gets broken during service due to thermal expansion. This leads to leakage at the air nozzle base itself. Such leakages lead to not only bypassing of more air from such locations, but also lead to defluidised zones. This can happen near bed ash drain points.

**TIP 15 -Leaky compartment dampers**

Leaky compartment dampers lead to partial fluidisation. Spilled fuel from adjacent operating compartment would lead to clinker formation and further growth. Dampers will need replacement. Butterfly dampers with proper seals would be the ideal choice to solve the clinker problem. In ordinary flap type damper sealing strips would help bring down the leakage. See the figure 9, for the detail of sealing strip which prove useful.

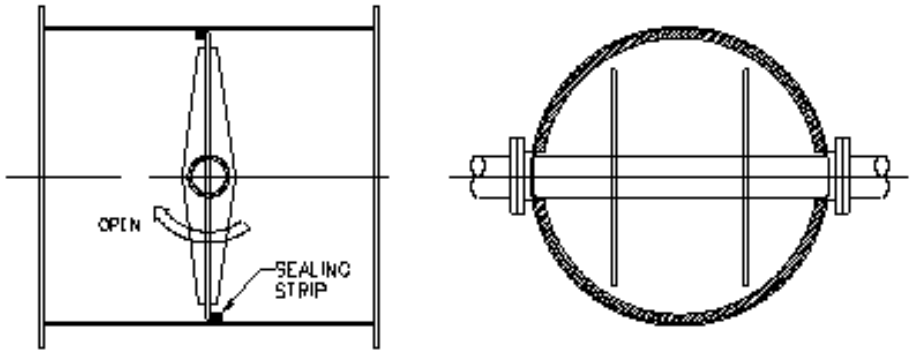


FIGURE 9 : SEALING STRIPS FOR CIRCULAR DAMPERS

**TIP 16- Improper setting of Power cylinder of compartment dampers**

Compartment dampers are to be set for closed conditions. At times it is found that the dampers do not close inside where as the power cylinder closes fully at the outside. See figure 10, which points out the defect, which is faced in many cases.

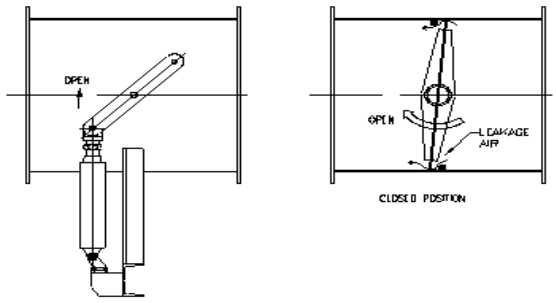


FIGURE10 : IMPROPER POWER CYLINDER ERECTION CAUSES LEAKAGE

**TIP -17 Leaky distributor plates**

Some manufacturers adopt removable distributor plate design. This is adopted for ease of approach during bed coil maintenance. The leakage between distributor plate and supporting frame would lead to local fluidisation and keeps making clinkers. When the air bypasses at some place it is natural at some other location, the bed has settled. See figure 11. If the erection is improper this could be a serious matter disturbing the fluidised bed operation.

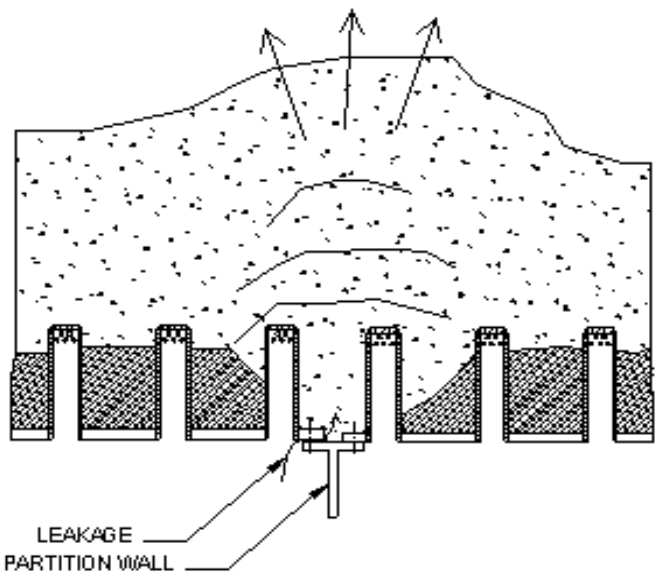


FIGURE 11: LEAKAGE BETWEEN SUPPORT FRAME AND DP PLATE

**TIP -18 Replace all failed air nozzles at one go**

Air nozzles may be made from cast iron / stainless steel. The nozzles begin to oxidise at the top where it receives radiation and convection heat. Over a period the top opens up. Now the air jets from top hitting the coils above. Some experience cracking of air nozzles along the top row of nozzles. Failed air nozzles allow more air flow and hence the air flow through the good ones would come down (Preferential flow through least resistance path). This leads to defluidised zones.

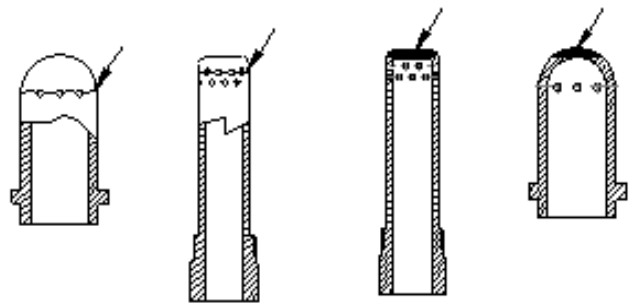


FIGURE 12: FAILED AIR NOZZLES DISTURB FLUIDISATION AND CAUSE BED COIL EROSION

**TIP – 19 Do not Operate the boiler with choked PA lines**

Primary air lines choke up when oversized fuel is fed or when compartment damper is opened before operating PA damper. Due to this the fuel nozzles get distorted. In running boiler no one can guess what the extent of distortion is. The fuel nozzle cap is distorted the fuel-air mixture may target the bed coil and lead to premature failure. Distorted nozzles are to be replaced immediately. SS fuel nozzles offer better protection when it comes to bed coil life.

**TIP 20 -Reduce the chances for start up clinkers**

Fluidised beds may be started compartment by compartment. When the first compartment is started one must ensure that there is a good mount of bed material to prevent the fuel spillage to adjacent compartment. The PA pressure should be bare minimum. Excess PA pressure spills more fuel to adjacent compartment. The PA pressure requirement will be less, since the bed height will be less during start up. When the fuel spill is more a border clinker is likely to form. Excess mixing air flow also leads to more spillage. It is necessary to keep the PA air line dampers of adjacent compartments in close condition.

**TIP 21- More PA and less fluidizing air**

By virtue of design / operating load, bed material settles along the wall side. This leads to throwing of bed material along the wall to the coils. This happens where fuel feed points are close to wall. When the frequent load turn downs are expected the bed plate pressure drop has to be designed for ensuring a minimum bed plate pressure drop of 75 mmwc. Operating at lesser $\Delta P$ would lead to pockets of defluidised zones.

**TIP 22 -Bed coil to fuel nozzle clearance**

The designer has to ensure a minimum clearance of 150 mm from fuel nozzle cap top to bed coil to safeguard the bed coil against erosion. At times due to faulty erection the clearance may be less leading to premature bed coil failure.

**TIP 23 –Check the adequacy of instrumentation of fluidised bed**

In the absence of bed temperature indications and air box pressure, bed pressure, operation of the fluidised bed is risky. When such instruments are compromised, no one can vouch that the bed is perfectly OK at all places. It may be possible to assess from the bed material drained from ash drain pipe. But the same will not be proper for bigger beds. Failed thermocouples, burnt compensating cables, defective temperature indicators are to be replaced at the earliest opportunity to prevent bed coil erosion.

**TIP 24- Review Oversized fuel feeders**

In some cases, it is likely that the feeders are over sized. A feeder designed for agro fuel becomes oversized when it comes to changing over to coal. The fuel feeders are to be replaced with a smaller one or additional speed reduction mechanism needs to be added. For a small rpm change the feeder may be dumping excess fuel. The clinker formation possibility is increased due to this. In the recent years many boiler users have started using high GCV imported coal. This may also lead to excess fuel dumping for a small rpm change.

**TIP 25- Change the bed coil configuration while replacement**

The pitch of the bed coil is a factor for erosion potential. At least one tube gap must be adopted while selecting the pitch. This is a reason for bend erosion in closely pitched hairpin type bed coils. Staggered bed coils would ensure sufficient gap between coils and thus fluidisation becomes more uniform at entire bed. Cross bed tubes are found to be better than the hairpin coils. While planning for replacement of bed coils, consider improvement of bed coil configurations. There are many possibilities for better configurations considering ease of replacement.

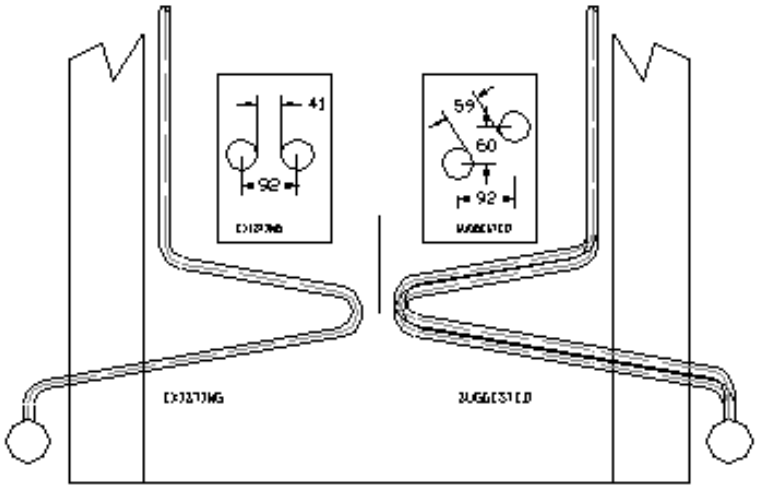


FIGURE 13: COIL SPACING IN HAIR PIN TYPE BED COILS

***CONCLUSION***

I hope the readers would agree some of the suggestions made here are applicable to their installations. Suggestions are welcome from the readers.

## AIRHEATER FOR INDUSTRIAL BOILERS

Airheater is a heat recovery equipment, which improves the efficiency of the boiler. The fuel consumption is reduced to an extent of 5 %, depending on the duty.

In Airheater the combustion air is preheated before admitting the air to combustion zone. The air preheating can be heated up to 200 deg C max, depending on the type of Combustion equipment. In FBC boilers preheating up to 150 deg C is normal. With use of SS air nozzles, air can be preheated up to 200 deg C. With grate bars as in stationary or traveling grate, the temperature is limited to 150 deg C.

### *CONSTRUCTION DETAILS OF AIRHEATER*

The air can be made to pass either through the tubes or outside the tubes. Each arrangement has its merit and demerit.

With gas flowing over the tubes steam soot blowers can be arranged for on line cleaning of Airheater. The tubes would be in line in this case. The Airheater calls for more space as compared to gas inside tubes. Usually the tubes have to be held horizontally as shown in figure. This leads to sagging of the tubes, in case they are longer.

With gas flowing through the tubes, the plugging of the tubes with ash is very common. Only if the gas is clean smaller tubes can be used. Generally the tubes are positioned vertically. This avoids the tube sagging. Acoustic soot blowers can be used in this case.

The Airheater is made as multipass design in order to recover the heat with less heating surface. Several arrangements are possible as shown in figures.

- *Tube Size*

The tube size is usually 63.5 mm OD x 2.01 mm thk and of non IBR quality. Tube material specification can be IS 3601 or BS 1774. Corten steel tubes are used for improving the tube life against cold end corrosion. Tube size smaller than 63.5 mm can pose problems such as choking with fuel ash. Smaller tubes also increase the pressure drop across the Airheater on the tube side.

- *Tube Length*

The tube length is usually limited depending on the access available below or above the Airheater for tube replacement. Long tubes are certainly vulnerable for vibration. Also the longer tube lengths need expansion joint at Airheater casing to account for differential expansion between the casing and the tubes.

- *Tube Pitch*

Tube pitch is so selected to have a minimum ligament of 15 mm. This is necessary for expansion of tubes to the tube sheet.

- *Tube Length*

The tube length per pass is usually limited to 3-m. Proper deflectors or guide vanes have to be provided to ensure the flow across the Airheater is properly distributed.

- *Tube Arrangement*

Tube can be arranged in line or staggered. However when the gas is dust laden and when the passes outside the tubes, the tubes have to be in line.

- *Tube Fit Up*

The tubes are expanded in to the tube sheet. Some tubes are welded in addition to expansion for structural stability of the Airheater. The expansion of the tubes also facilitates easy removal of tubes by collapsing of tube ends.

- *Air Side Velocity.*

The air side velocity is usually around 5 to 6 m/s in order the have an optimum draft loss. Airheaters are usually designed for an air side pressure drop of 50 to 100 mmWC.

- *Gas Side Velocity*

The gas side velocity is limited to 18 m/sec. Higher gas side velocities could lead to erosion of tubes. Further the draft loss is usually limited to 75 to 100 mmWC.

***AIR HEATER CORROSION***

There are two modes by which the corrosion failures are initiated. The flue gas contains water vapor, which is due to moisture and hydrogen in fuel and moisture in air. This water vapor condenses on the cool surfaces of Airheater. The temperature of the Airheater tubes will be closer to ambient temperature at air inlet section. This is where the water droplets form. The sweating of the tubes here promotes corrosion spots. The ash in flue gas also deposit at this point and leads to choking of the tubes.

With fuels containing sulfur, the acid formation takes place and the corrosion is accelerated. The Airheater failure in oil fired boilers would be faster as compared to coal fired boilers. With high moisture fuels such as lignite, wood, bagasse the tube failures are common.

It is better to design the Airheater with multiple blocks so that the cold end block can be replaced when necessary. If the Airheater is of a single block, the replacement cost and down time cost for replacement of tubes will be high.

***CONTROL OF COLD END CORROSION***

The following methods are used in controlling the cold end corrosion.

- Bypassing a portion or all of the cold air to increase the metal temperature. This is used when the boiler operates at low loads, when the condensation of the gases is unavoidable.
- Increase the spacing of the first few rows of the tubes at the air inlet side to decrease the cooling effect. The heat exchange will be less in this section, thus preventing the condensation.
- Recirculate a portion of the hot air back to the cold end, so that the air inlet temperature is more. This improves the metal temperature thus avoiding condensation.
- Use parallel flow Airheater to improve the metal temperature.
- Use steam coil air preheater to preheat the air before admitting into the Airheater.
- Use tubes made of corten steel to extend the life of the tubes.

### *AIRHEATER EROSION*

The Airheater tubes are subject to vortex erosion when flue gas passes through the tubes. This happens only in ash containing fuels such as coal & rice husk, and with flue gas flowing through the tubes.

The failure takes place at the inlet end of the tubes within a distance of 125 mm. To prevent tube failures, concreting is done at gas inlet end to a height of 125 mm. Alternately, ferrules are used, which can be replaced on failure.

### *EFFECTS OF AIRHEATER FAILURE*

In the event of tube failure, the heat gain from Airheater will not be available for furnace heat transfer. In order to compensate for this heat loss the fuel consumption would go up. As the failures increase, beyond a limit the combustion airflow to the furnace would start coming down, as the combustion airflow goes to chimney directly. This leads to poor combustion of fuel. The unburnt in ash and flue gas will go up. The furnace draft can not be maintained. Further the steam generation would come down. Generally at this stage only, the failure is realized by many.

### *HOW TO DETECT THE FAILURE*

Draft loss and temperature drop can be checked with performance parameters of the installation when it was new. In the absence of proper instrumentation / log procedures, only physical checking can help.

Inspection doors are required at inlet and outlet of Airheater both on air side and gas side. Without which one can not confirm the failure. With boilers operating on low load, the failure happens but does not surface up with problems. Hence periodical check up alone can be the solution.

### *AIRHEATER TUBE / CASING VIBRATION*

Vibration could be experienced due to air column inside the Airheater. For this, it is necessary to adjust the width / height of airflow passage. This can be done by introducing baffles / tube sheet.

In some cases, the tubes may vibrate due to air flowing air around tubes. Bypassing some airflow would solve the problem. Sometimes the tube thickness may have to be changed.

The above solutions can be best given by the designers only.

### *CONCLUSION*

It has been seen that many boiler users are unaware of the mechanism of Airheater failures. For the general knowledge of the boiler users, the above information is shared. Feedback is welcome.

---

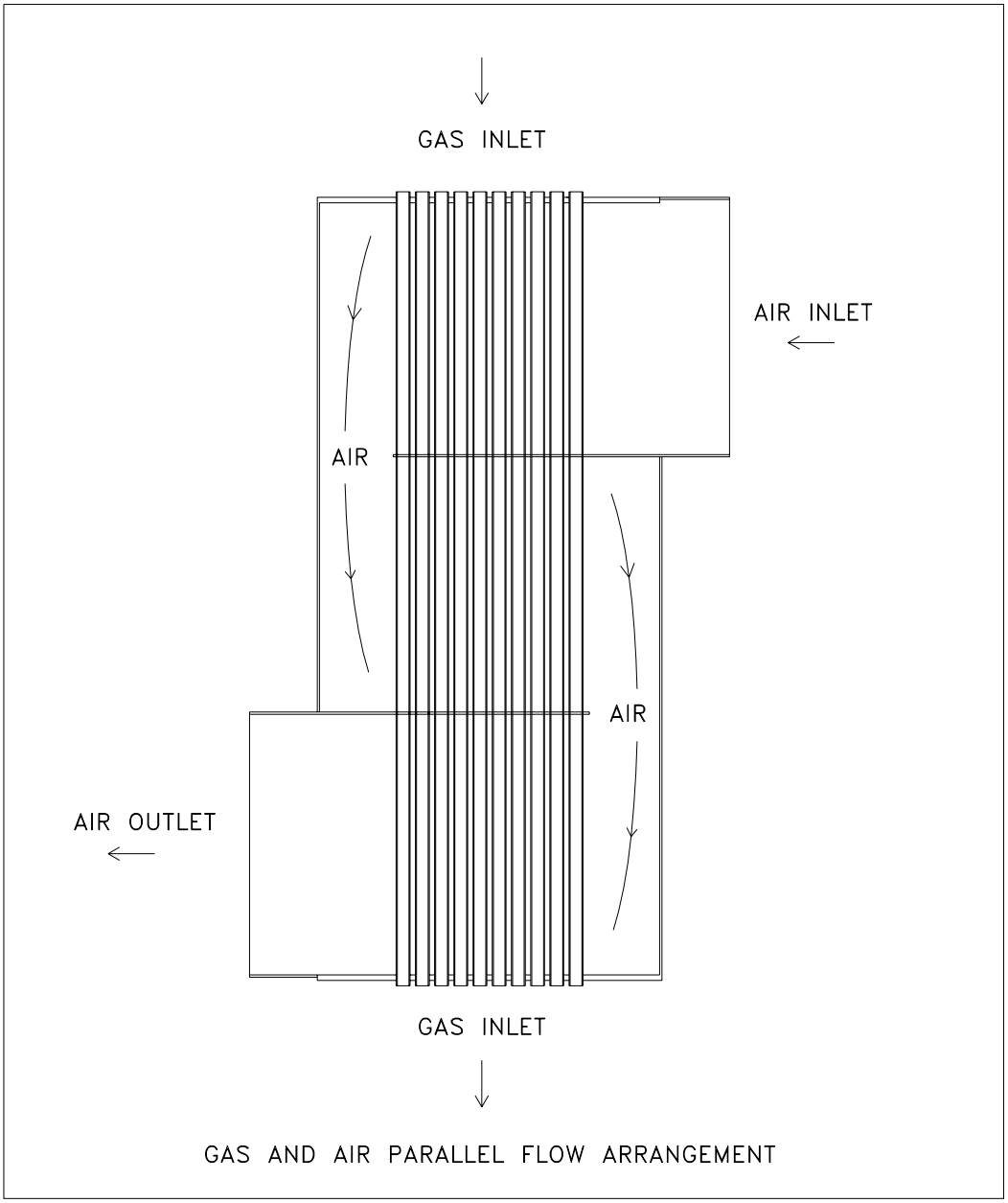
GAS INLET
AIR INLET
AIR
AIR
AIR OUTLET
GAS INLET
GAS AND AIR PARALLEL FLOW ARRANGEMENT

Figure 1

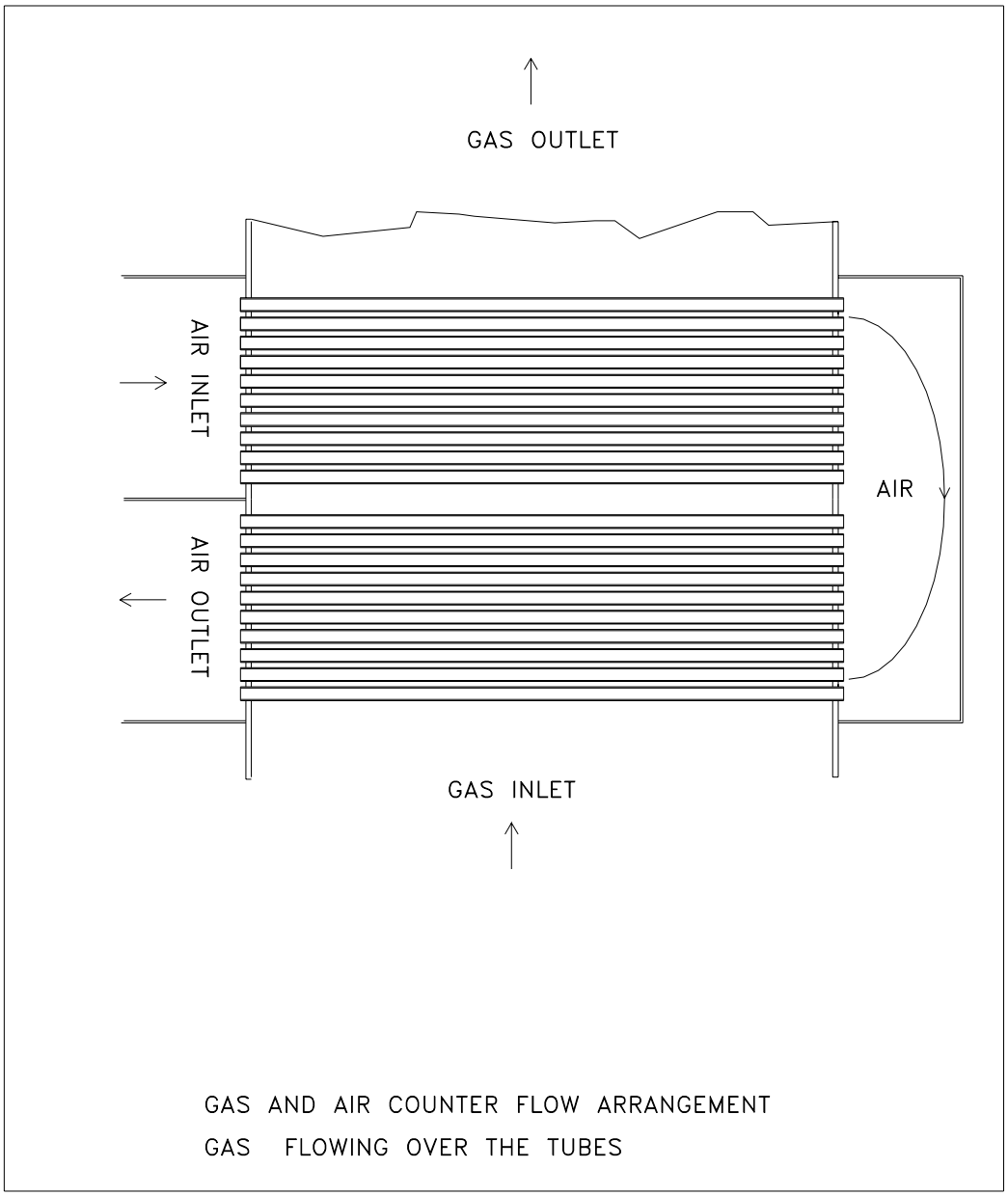
GAS OUTLET
AIR INLET
AIR OUTLET
AIR
GAS INLET
GAS AND AIR COUNTER FLOW ARRANGEMENT
GAS FLOWING OVER THE TUBES

Figure 2

**BANK TUBE FAILURE IN A DISTILLERY**

## *INTRODUCTION*

The customer had been facing frequent tube failure in boiler bank. The customer maintained that the feedwater & boiler water quality is maintained as per manufacturer recommendations. The chemical dosing is done in the feedwater tank by a regulated dosing system. Customer faced the tube failure only in one particular row of the bank tube. The failure cause was studied and measures have been brought out in this bulletin for the interest of the boiler users.

## *DETAILED REPORT*

### *The Boiler Details*

The boiler parameters are 7 TPH, 21 kg/cm2g & saturated steam. It is of bidrum configuration with fluidized bed combustor. The heat transfer surfaces include bed coils of hairpin type, fin-welded waterwall, bank tube assembly, and airheater. Since the boiler is not provided with economizer there was no Deaerator. However the client has provided sparger-heating system to purge the oxygen to a maximum possible extent. The feedwater temperature is maintained close to 95 deg C, whenever the boiler is in operation.

### *The Circulation System*

The feedwater is pumped directly from the feedwater tank to the steam drum based on the signal from drum level transmitter. The water gets heated close to saturation temperature as soon as it enters the drum though the feed water distributor placed below the normal water level. The subcooled water enters though the rear set of bank tubes to the lower drum. From the lower drum the water flow gets divided into two streams. One stream flows though the front set of boiler bank. The other stream goes through the bed coil to water wall and then to steam drum.
Preboiler system

The plant is equipped with RO plant to deliver practically <50 ppm TDS level. The water is stored in Stainless steel tanks. The pH adjustment is not done at this stage. The plant uses part of the treated water. From the storage tank the make up water is transferred though MS piping to the feed water tank. The feed water tank is of MS construction. The tank is well covered from top. The suction line to boiler feed pumps is provided with suction filter.

### *First Call*

When the failures were frequent, the client called up for immediate visit. At the time of the visit the boiler was in operation. The failed tube was inside the boiler itself. The tube was not available for inspection. The water chemistry was checked in the boiler and was found to be OK. The blow down tank appeared reddish. I could guess there is some corrosion in the boiler. Normally Iron is not analyzed in small plants. The boiler vendor does not advise the boiler user for regular analysis of boiler water for iron. However on seeing the color of the blow down water, it is necessary for the plant engineer to check the source. In this visit I recommended for the thorough analysis of Condensate water, make up water, boiler water. I requested for immediate call on the next failure.

### *Next Call*

By the time the next call came, it appeared that many more failures had occurred. The plant had been off in between several times. The plant personnel did not follow the lay-up procedure.

I was shown the corroded iron particles collected from the mud drum and bed coil inlet headers. This time the boiler drums were opened. The drum surface was containing bubbles of iron oxide deposits. The inside of the bank tubes also contained bubbles of iron oxide deposits.

There were no pits in the surfaces. However below the loose iron oxide deposits pits were found to be forming. It was clear the large amount of corrosion products did not generate from the boiler. The feedwater tank was containing lot of iron oxides particles. The sparger heating arrangement was found to be stirring the loose iron oxides. This proved the entry of the loose iron oxide deposits into the boiler.

Now in the boiler bank the failures were found only in the first row of the bank tubes. Customer wanted to know why the failure could occur only in this location. The reason I could give was that the circulation of water should be minimum here because the refractory tiles block the heat pick up in these tubes. Hence the loose iron oxides could not have remained in motion. Nice theory! Is it not? If it were gross pitting within the boiler, not a single time the bed coil or water wall or other boiler bank tubes failed. That is how I have reasoned out.

***CONCLUSION***

Now coming to the source of problem. The pH is not boosted in water treatment plant. The low pH water was being pumped through the MS piping to the MS tank. The hydrogen could easily rip the iron from the metal surface. The craters in the tank & piping proved this. In the feedwater tank there was no presence of iron / iron oxides above water level or even in the roof. This proved that the pH of the water was doing the mischief.

I had recommended for SS piping from the storage tank to feed water storage tank in the boiler house. The pH boosting must be done at the outlet of water treatment plant. At least two other cases I have come across wherein the feed water tank consists of lot of iron oxide products.

***WATER LEVEL DANCING IN A BIDRUM BOILER***

It is a bidrum boiler wherein the drum level kept dancing. The customer had this problem since installation. The water level nearly goes out of the gauge glass at the top tapping in the steam drum. It is a plant wherein 80 % of the condensate comes back. The blow down pit looked reddish. The boiler drum showed off reddish stuff. Since it is A low-pressure boiler, there was no economizer. Otherwise the economizer could be a supply source of iron oxides. Either the oxides were forming within the boiler or it was getting transported through the condensate or make water system. First I traced down the condensate return system. There was very less chance of even oxygen getting in to the system. The plant runs practically thorough out the year and hence there was no chance of the iron oxides formation from the plant. But on inspection of the DM water storage tank, I saw junks of corrosion product. The pH from the DM plant was less than 7. The DM water storage tank was not lined with rubber or any other protection system. The pH was not being boosted up at the DM outlet.

That solved the problem. Customer was advised to boost up the pH so that the corrosion would not proceed further. But the tank had to be acid cleaned to remove all the iron oxides.

***FREQUENT FAILURE OF FEEDWATER PREHEATER***

It is a low-pressure boiler with a boiler bank evaporator section followed by a feedwater preheater. The customer was replacing the feedwater preheater very often. The make up water pH was less than

7. The feedwater tank, DM plant outlet piping were found to be corroding inside. Customer was advised to raise the pH to 8.5 before the water leaves DM plant.

***LESSONS LEARNT***

The pH in feedwater and boiler water shall follow recommendations of boiler manufacturer. Ignorance of the water chemistry leads to non-availability of boiler. Low pH & high pH lead to corrosion in boiler. The pH should be in range of 8.5 to 9.5 in feedwater and 9.5 to 10.5 in boiler water. It has been very well established that the corrosion of steel in minimum in the above range.

---

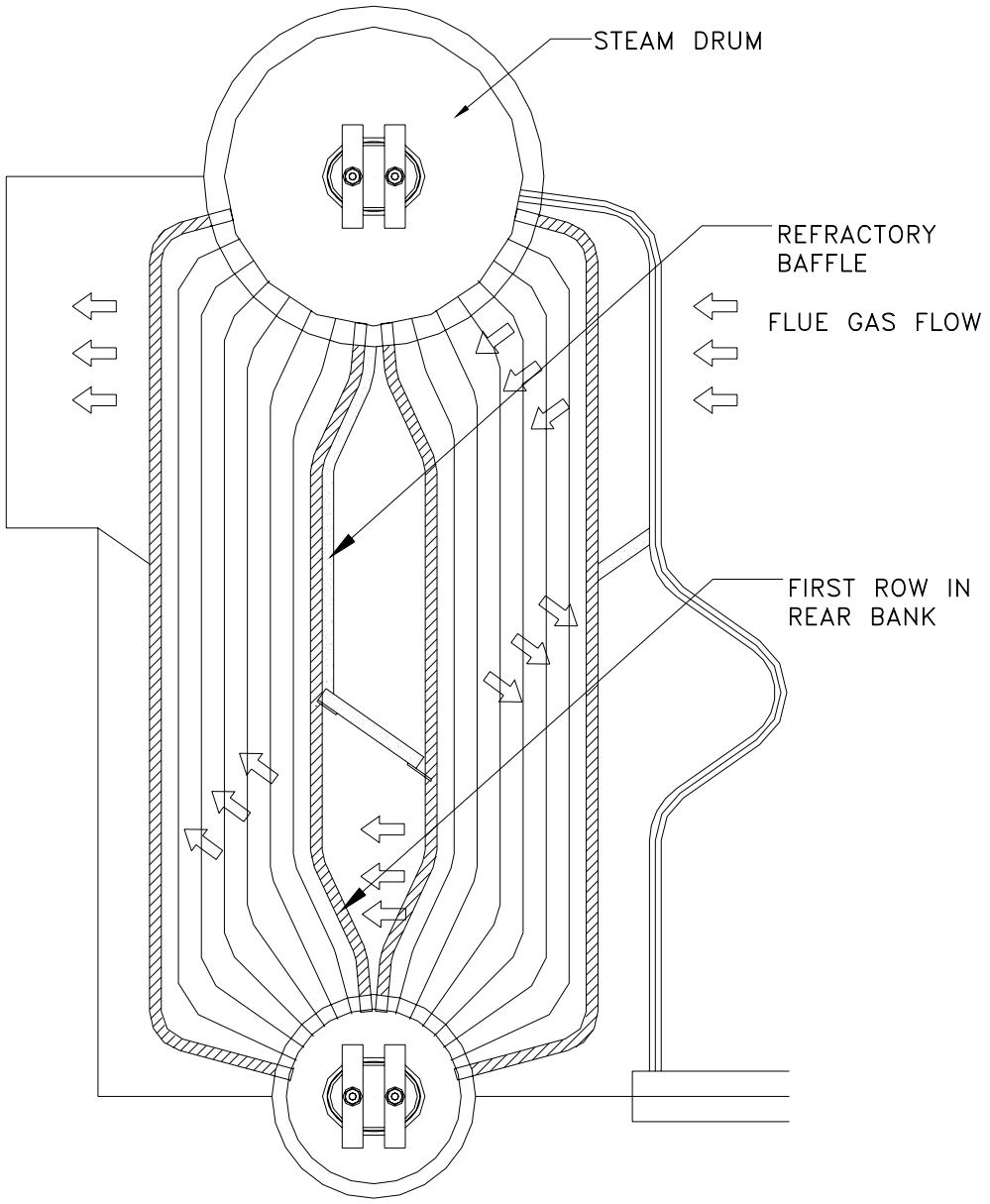


BOILER BANK ASSEMBLY

# CONSIDERATIONS IN CHANGING OVER FROM OIL FIRED BOILERS TO SOLID FUEL FIRED BOILERS FOR SMALL BOILER USERS

## *INTRODUCTION*

Small industrial boilers are extensively used in textile processing, pharmaceutical and food processing Industries. In general these industries have been very specific on using pollution free boilers so that the end products are within the international quality requirements. Competition from Industries and the rising cost of oil have started pinching the industries. Some industries who had worked out the payback on switching over to locally available solid fuels were astonished by the payback of solid fuel fired boilers. This article is written to assure the industries that there is no compromise on solid fuel firing. The various aspects to be addressed on selection of boiler are presented here. A case study of an Industry who successfully switched over is presented here.

## *FURNACE OIL FIRED BOILERS*

FO fired boilers are generally a three pass boilers for application up to 16 TPH and 21 kg/cm2g operating pressure. The boilers are very compact and occupy very less floor space. Beyond 16 TPH, due to large furnace diameter requirement, D type water tube boilers are designed.

The response of the boiler is excellent when it comes to meeting very wide load fluctuations. With modulating control oil burners the best response is possible. The large HTA with small water volume makes the boiler to respond to sudden demand. The burner copes up with the required firing rate. The boiler runs unattended. The plant is clean as long as there is burner operates soot free.

Furnace oil fired boiler may be provided economizer with suitable deaerator and drum coil preheater or by high pressure deaerator. The feed water temperature at economizer inlet should be above 126 deg C to avoid problems due to acid condensation over the water cooled tubes. In small capacity boilers, economizers are not provided due to high initial investments on account of deaerator and its control system. Airpreheater can not be used for the same reason of acid condensation. The furnace oil fired boilers are prone for chimney corrosion if proper care is not taken.

## *SOLID FUEL FIRED BOILERS.*

Solid fuel fired boilers are packaged shell type boiler with integral furnace up to 5 TPH capacity. Up to 3 TPH single furnace is provided. Twin furnaces are used beyond 3 TPH. The furnaces are hand fired and the grate for firing is a fixed type. Beyond 5 TPH capacity the large furnace sizes requirement leads to water wall cum shell type design. It is also possible to have a totally water wall design. Up to 8 TPH boiler capacity it has been observed that manual firing is possible. Beyond this, it is a must to go in for traveling grate furnaces due to difficulty in fuel feeding. The fuel has to be properly sized for automated fuel feed equipment. Wood chippers are used to reduce the wood logs to a size of 25 mm and below. For automated coal feeding chain grate stokers are used. These grates are also fitted in shell type boilers. (See picture above)

The fuels used for solid fuel fired boilers can be Coal, firewood, any other process waste such as plywood waste, wood shavings, saw dust.

***RATE OF COMBUSTION WITH OIL/COAL/WOOD***

Oil burners respond to demand immediately. This is due to the fine oil droplets by the burner nozzle and the turbulent air mixing at the burner tip and within the flame zone. A solid fuel can also be made to micron particle and the combustion can be made as rapid as furnace oil. In fact this is done in the pulverized fuel fired boilers. The coal is made as powder to a size of 76 micron and burnt like burner. It is cost prohibitive to prepare a solid fuel to such micron particle for use in small boiler. Next in order of response we have fluidized bed combustors. The response is fairly good and it has been found possible with coal the response is as good as oil. With a fluidized bed pollution is major issue. Cost effective solutions are yet to come for small boilers. Hand fired wood fired / coal fired boilers are known for less pollution. But when we use a wood log in a furnace the burning rate is slow for the reason that the oxygen has to diffuse through the wood / coal particles and react with the fuel to complete the process of heat liberation. This inherently results in poor response.

Question is how to overcome this. Most of the food processing industries require a steady steam pressure & temperature. How can this be done is the question?

This can be done in a systematic way as below.

1. Quantify the steady state steam consumption in various steam consuming ends.
2. Decide the lowest pressure required for the process at various consuming ends.
3. Find out the steam requirements for cold start of each section.
4. Find out the various combinations of steady state demand and initial start up steam consumption. The peak demand expected from the boiler is known. The steam piping itself is to be sized for this purpose.
5. Apply a factor for the slow response from the boiler and decide the steam generation of the boiler.
6. When the drawl of steam is sudden, the pressure is bound to drop. There should be a PRV to regulate the steam pressure downstream of the boiler at the plant end. When the sudden demand is required, the boiler pressure would come down. This leads to flashing of steam. The water hold up of the boiler should be available to produce the needed steam quantity.

There are four different types of plants

A. One consumer – steady load
B. One consumer – unsteady load
C. Several consumer – steady load
D. Several consumer – variable load

***CASE A & C***

It is simpler. The boiler has to be sized to 1.2 times the steady state requirement. This is required to meet the time lag between fuel charging and the heat release in the furnace.

***CASE B &D***

The boiler has to be sized to 1.2 times the peak demand required. In addition the water hold up that is available between normal water level and low level should be sufficient to meet the sudden steam drawal. The boiler pressure has to be higher and a PRV will be required at consumer end so that the pressure is regulated. The boiler responds to varying demand by flashing principle.

### *FLASHING OF STEAM IN BOILERS*

When the pressure in the boiler comes down from a higher pressure to a lower pressure, part of the boiler water instantaneously evaporates to produce additional steam, termed as flash steam. For every pressure there is corresponding boiling temperature and the water contains fixed amount of heat. Higher the pressure, higher will be the heat content. If the pressure is reduced, heat content is reduced and the water temperature falls to lower boiling temperature. This means certain amount of excess heat is available due to the difference in the heat content of water between the two pressures. This excess heat leads to evaporation of a portion of the water by adding necessary heat for boiling. This process is called flashing.

Flash steam produced is calculated as per the following formula

**% Flash steam = (Hp1 – Hp2) / Lp2**

Where,

Hp1 - Enthalpy/heat content of saturated water at operating pressure before the trap
Hp2 - Enthalpy/heat content of saturate water at operating pressure after the trap
Lp2 - Latent heat of evaporation at operating pressure after the trap

Thus amount of flash steam produced is part of the water hold up in boiler. Higher the water hold up, more will be the benefit. When the flashing occurs it should not result in low water level of the boiler. Thus depending on amount of steam required, the water hold up from NWL (normal water level) to LWL (low water level) must be provided.

For very high steam demand one has to choose external steam accumulators. Steam accumulators are designed based on the same principle where in the energy is stored in the form of hot water. The water flashes and gives steam as the pressure is dropped. See the scheme external steam accumulator below.

In a boiler, the steam space does not decide the additional capacity to offer steam. However amount of steam space will decide partly on the purity of steam.

### *EMISSION FROM SOLID FUEL FIRED BOILERS*

The wood is low ash fuel and hence the total ash removal is very less. The dust emission would be there when the fire is kindled. For this purpose, a mechanical dust collector / simple cyclone is a must. In addition the wet ash trap should be planned for stringent dust control. A rotary feeder is a must below the dust collector, as otherwise the leakage of air through the feeder would lead to pollution.

### *CASE STUDY*

M/S SKM egg products is an exporter of egg products. The customer desired to switch over to wood firing so that the operational cost could be brought down. At present the oil fired boiler was very close to plant.

1. The new boiler was located away from plant. The distance was 470 meters. The location was chosen by the customer as per vastu consideration. Moreover the customer did not want to take

a chance on the dust pollution. The boiler was purposely kept away so that the dust due to wind would not enter to the building from air in takes.

2. There were number of steam consumption sections. The sudden drawal of steam was present in this plant, when a section starts from cold. The boiler what the customer had was with a twin drum design. In the case of elevated drum additional water hold up was available. Hence it was decided to keep the same water hold up in new boiler.
3. The operating pressure of the oil fired boiler was 14 kg/cm2g. The new boiler pressure was raised to 19 kg/cm2g. A PRV was envisaged at the present Main steam header. It was decided that the boiler pressure would swing down from 19 kg/cm2g to 14 kg/cm2g and in the process 3% flashing was expected. This additional steam would be instantaneously available to process without dropping the pressure in the operating sections. This was essential to avoid the pressure drop in operating sections. Otherwise the product under process goes for rejection.
4. The new boiler was chosen with airpreheater so that the best efficiency is achieved.
5. The pipe line sizing as done to take care of peak steam requirement. This was calculated back from the present peak oil consumption. This was basically related to present nozzle discharge capacity of the burner.
6. The main steam valve was selected for peak steam capacity.
7. The pipe line being long pipe section insulation was advised to reduce the heat loss and the long life required.
8. Customer wanted to have a hot stand by of the present oil fired boiler, for some time till the switching over is smooth. For this purpose the burner oil nozzle capacity was reduced.
9. After the initial commissioning period, the oil fired boiler must be put into proper dry or wet preservation. The Scheme for preservation of the boiler was finalized and required piping was added. It was planned to keep the hot water under recirculation through the boiler and return to condensate cum feed water tank. Since the feed water is the boiler would be kept warm, it will ensure the boiler gas side also will be protected against atmospheric corrosion.

The plant layout and boiler features are illustrated in attached drawings. The photographs show the new boiler in operation.

***CONCLUSION***

Switching over from furnace oil firing to solid fuel firing can not be taken easy. Going for same HTA in the manual fired solid fuel fired boiler may prove a blunder. A steam consumption survey is to be done. Choice of external accumulator shall be reviewed in case of sudden load swings. Modern boilers have must less HTA to water hold up as compared to old boilers.

FIGURE 1

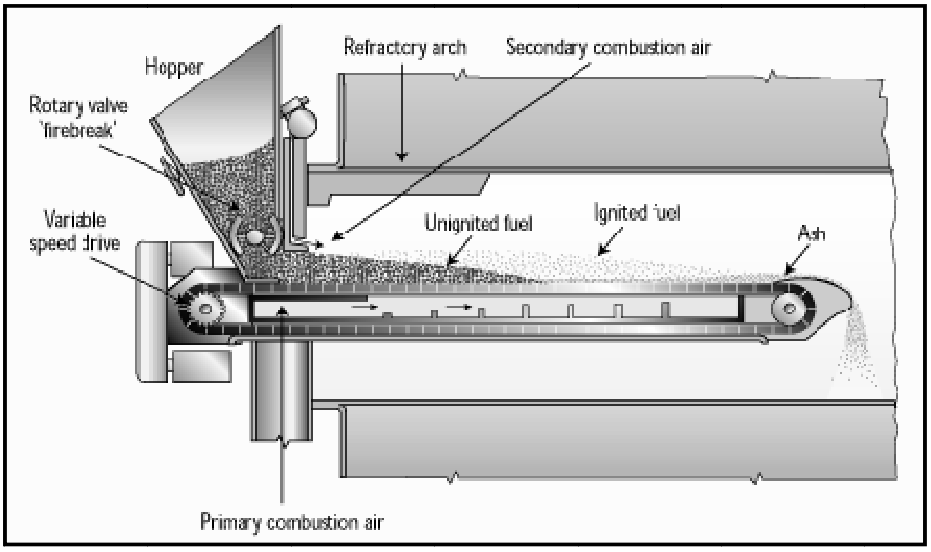


FIGURE 2

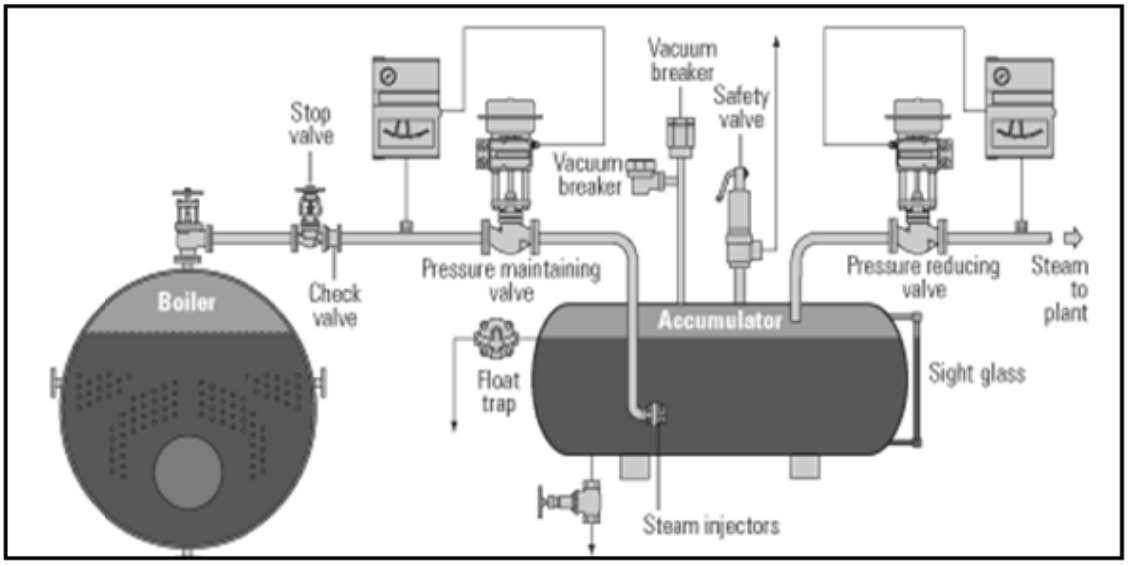


FIGURE 3

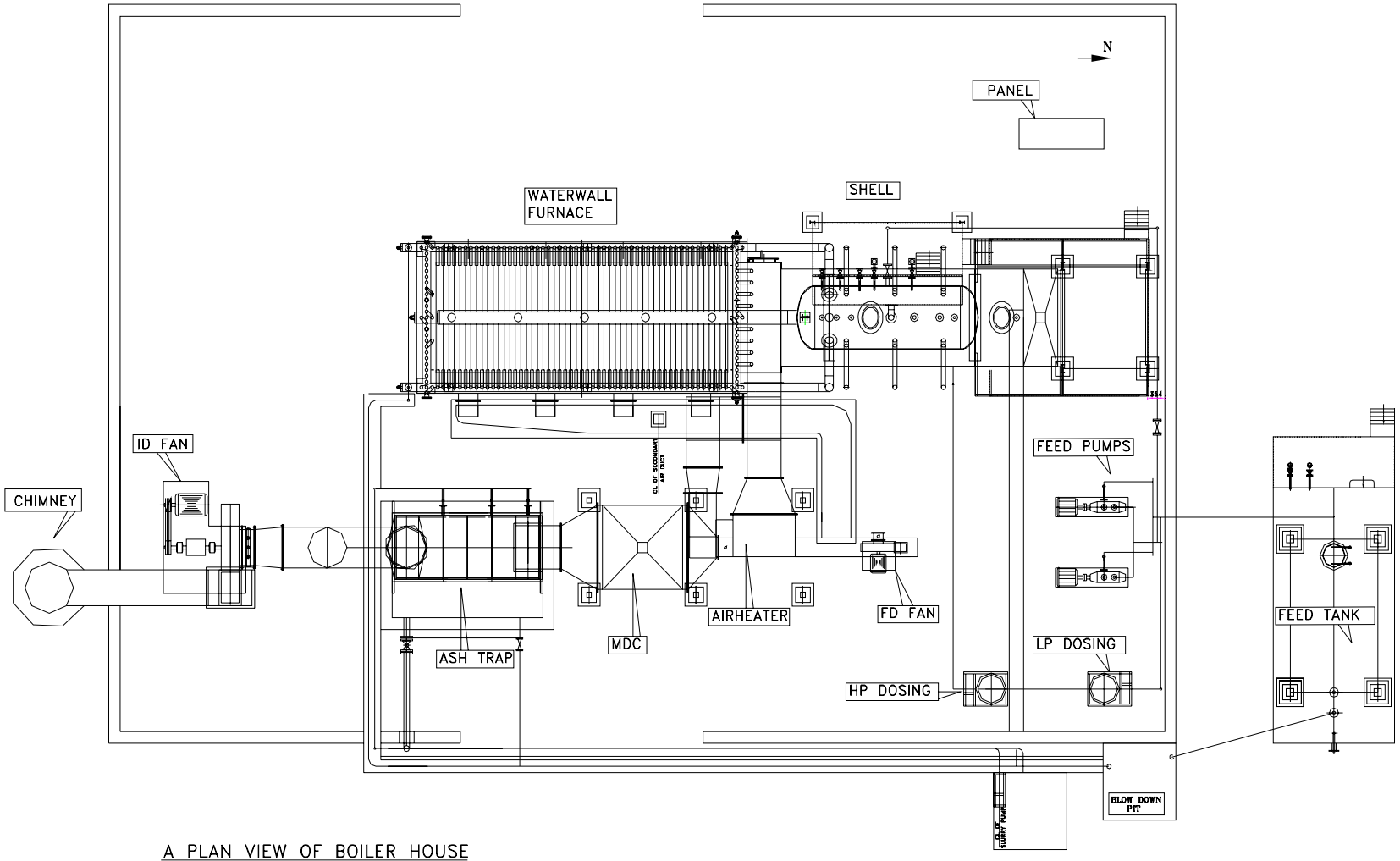


A PLAN VIEW OF BOILER HOUSE

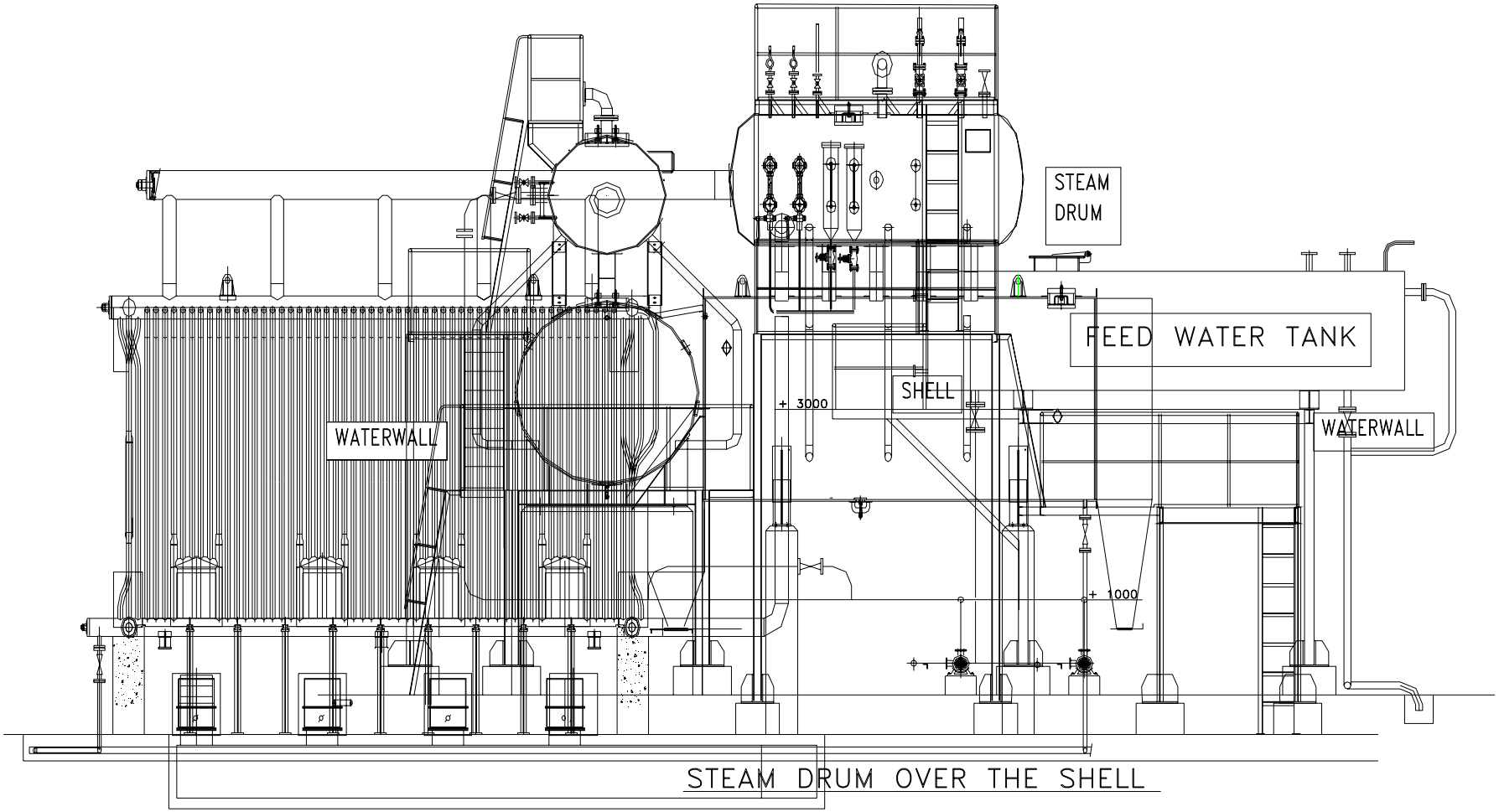


ELEVATION OF THE BOILER WITH WATERWALL FURNACE & SHELL

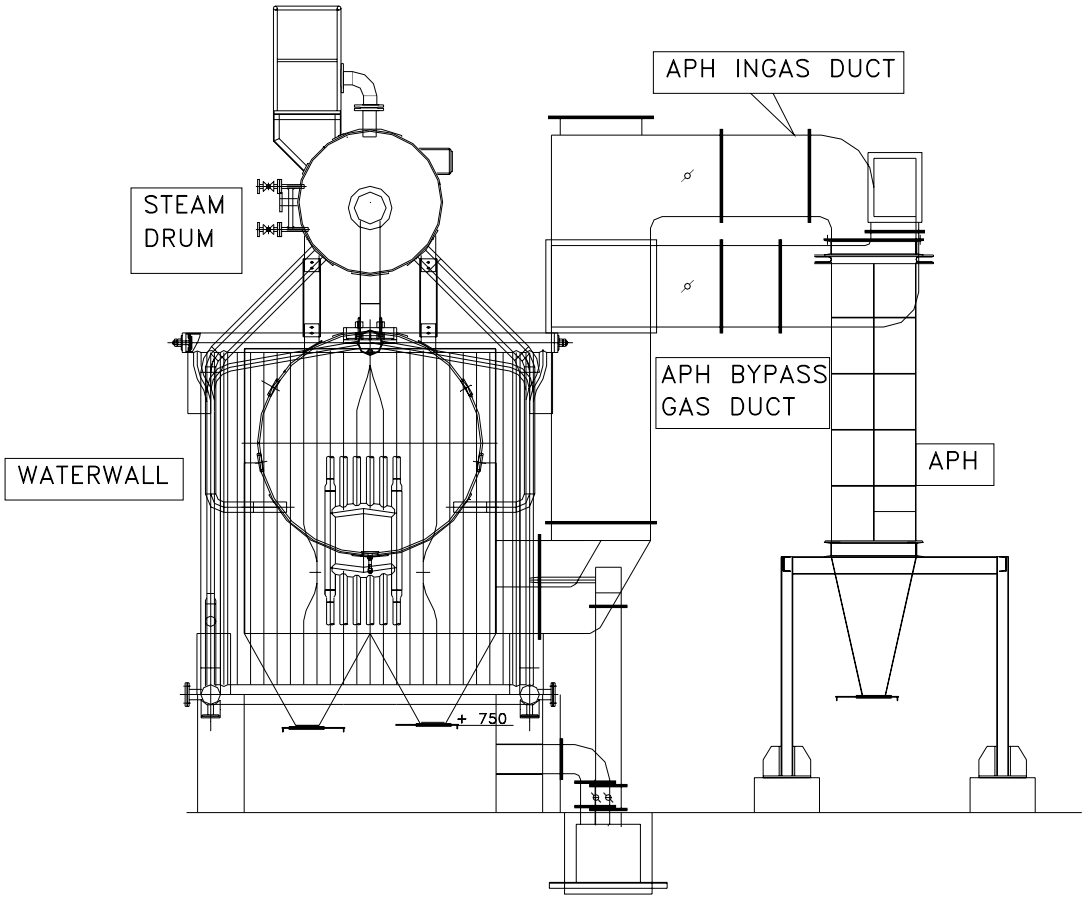


CROSS SECTIONAL VIEW OF BOILER WITH SHELL & APH

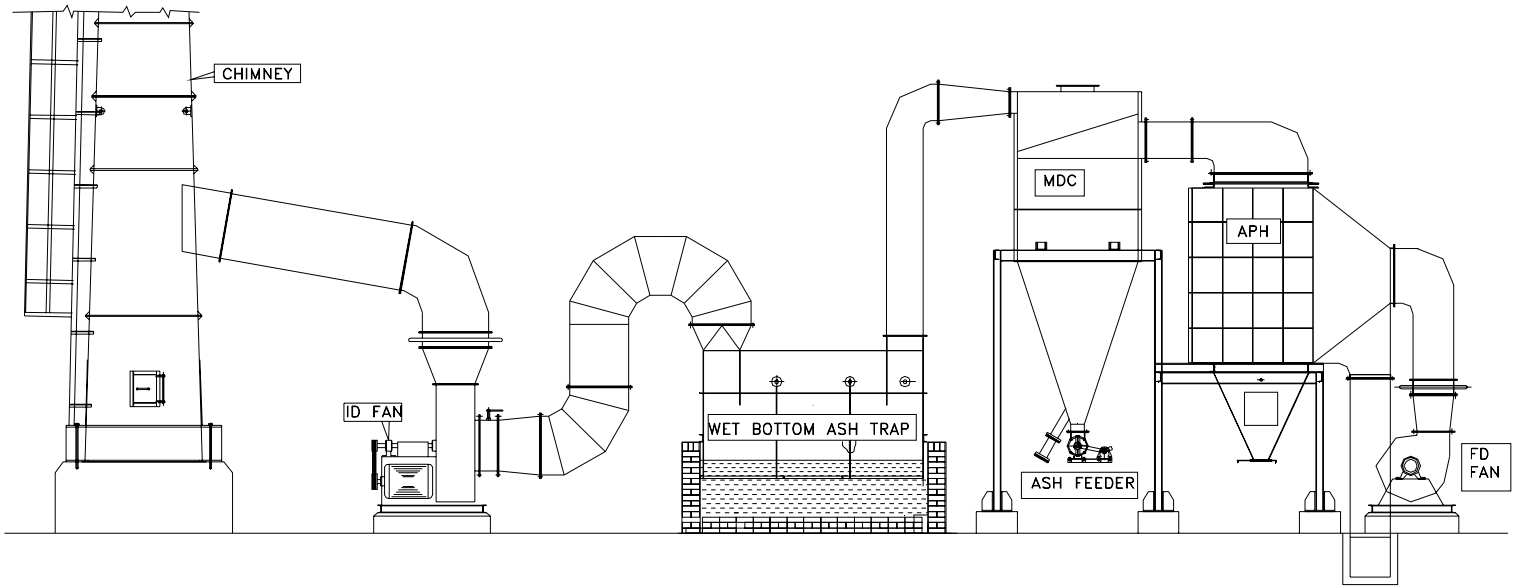


VIEW SHOWING THE APH, MDC, WET BOTTOM ASH TRAP

PHOTO 1: EXISTING OIL FIRED BOILER

PHOTO 2: NEW WOOD FIRED BOILER

PHOTO 3: PHOTOGRAPH SHOWING THE BOILER FURNACE, SHELL & STEAM DRUM

PHOTO 4:PHOTOGRAPH SHOWING THE WET BOTTOM DUST TRAP

## ART OF BED MANAGEMENT IN AFBC BOILERS

Fluidization had been extensively researched and brought out in many papers. The fluidization which as originally used for chemical reactors was extended to combustion technology. It had been nearly 30 years since the fluidization had been commercially applied for combustion. Many manufacturers design and supply boilers with Bubbling fluidized bed combustion technology. Many fluidized beds are operating successfully. There are some installations wherein the fluidization misbehaves leading to poor combustion and bed coil failures. The subject of fluidization is reviewed here for the benefit of operating engineers.

The behaviour of a fluidized bed is difficult to predict since the parameters such as the particle size, shape and density are not simply some numbers. These parameters in real world fall in to wider range. There are many Fluidization regimes which have been well explained in Fluidization engineering by Kunii & Levenspiel.

### *REVIEW OF FLUIDIZATION BASICS*

#### *What is Fluidized Bed?*

When air or gas is passed through an inert bed of solid particles such as sand supported on a perforated plate, the air, initially, will seek a path of least resistance and pass upward through the sand. With further increase in the velocity, the air starts bubbling through the bed and the particles attain a state of high turbulence. Under such conditions, the bed assumes the appearance of a fluid and exhibits the properties associated with a fluid and hence the name 'Fluidized Bed'. If velocity is too low, Fluidization will not occur, and if the gas velocity becomes too high, the particles will be entrained in the gas stream and lost. Hence, to sustain stable operation of the bed, it must be ensured that gas velocity is maintained between minimum Fluidization velocity and particle entrainment velocity. Fluidization is widely used for many commercial operations, such as transportation, heat treatment, absorption, mixing, combustion, chemical reactions.

#### ***Regimes of Fluidized bed combustion (****source: Fluidization engineering-Kunni & Levenspiel)*

When the solid particles are fluidized, the fluidized bed behaves differently as velocity, densities of gas & solid particles are varied. It has become evident that are number of regimes as shown in figure 1.

- Regime A- Fixed bed- the particles are at rest.
- Regime B- Minimally fluidized bed: The upward moving gas is able to overcome the gravitational force on the particles. The voidage increases slightly.
- Regime C- As the velocity is increased further, the bubbles are generated. The bubbles coalesce and grow as they rise to the top of bed.
- Regime D- If the ratio of the height /diameter of the bed is high; the size of the bubbles becomes equal to the diameter of the bed. This is called slugging.
- Regime E- When the particles are fluidized at a high enough rate, the upper surface of the bed disappears. Instead of bubbles one observes turbulent motion of solid clusters and voids of various sizes and shapes.
- Regime F- With further increase in gas velocity, eventually the fluidized bed becomes an entrained

bed in which the pneumatic transport of solids take place.

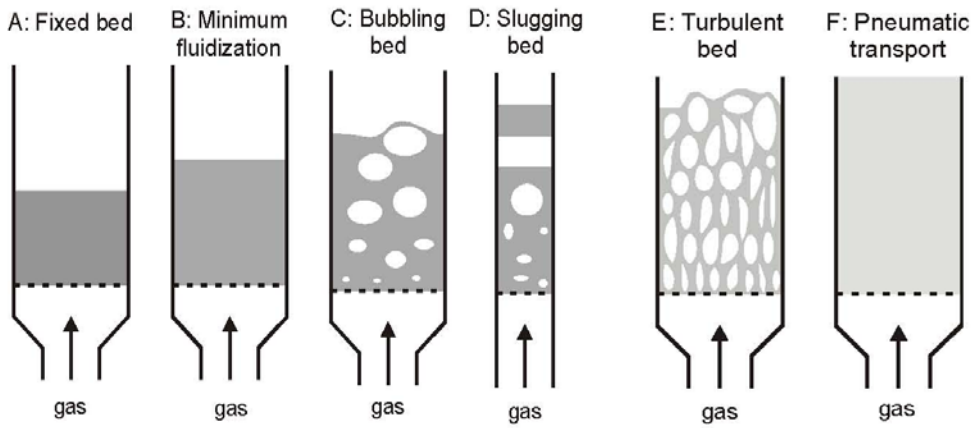


Figure 1: Different regimes of fluidisation

As you might have guessed we are supposed to operate in regime C. But invariably we may land in regime E, where the particles have become coarser. Even coarser particles are seen getting out of the bed.

***GELDART CLASSIC CLASSIFICATION OF PARTICLES***

Not every particle can be fluidized. The behaviour of solid particles in fluidized bed depends mostly on their size and density. A careful observation by Geldart (1973) is shown in figure 2. There are four different types of materials categorized.

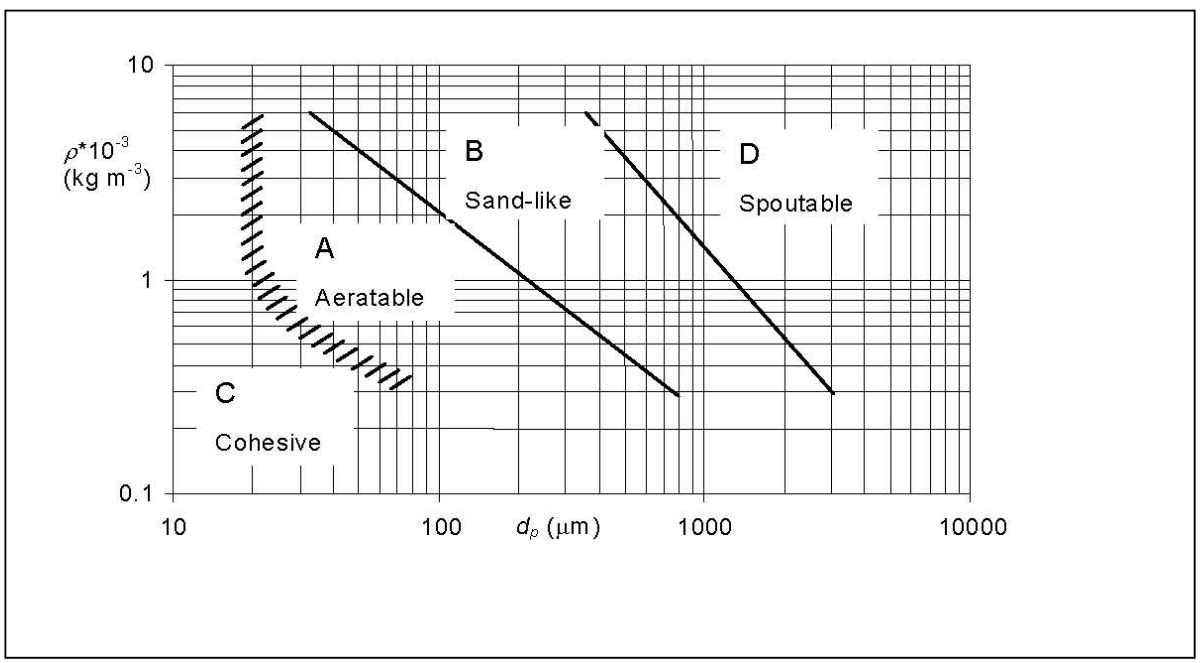


- Group A- these are designated as '*aeratable*' particles. The particles have small mean particle size ($d_p$<30μm) and or low particle density (<1.4g/cm$^3$). Fluid cracking catalysts are in this category. These solids fluidize easily, with smooth Fluidization at low gas velocities without the formation of bubbles. At higher gas velocity, a point is reached when bubbles start to form and the minimum bubbling velocity, $U_{mb}$ is greater than $U_{mf}$.

- Group B –these are called '*sand like'* particles. Most particles of this group have size range of 150µm to 500µm and particle density is from 1.4 to 4 g/cm$^3$.
- Group C-these particles are cohesive or very fine powders. Their sizes are less than 30µm. They are extremely '*difficult to fluidize'* because inter particle forces are relatively large. Examples of group C materials are talc, flour and starch.
- Group D –these materials are called, '*Spoutable*' and the materials are either very large or very dense. They are difficult to fluidize in deep beds. As the gas flow is increased, a jet is formed in the bed and material may then be blown out with the jet in a spouting motion. Roasting metal ores are examples of group D materials.

Geldart's classification is clear and easy to use as displayed in figure 2 for Fluidization at ambient conditions and for U less than about 10*$U_{mf}$. For any solid of known density and mean particle size this graph shows the type of fluidization to be expected.

***FLUIDISATION VELOCITY***

Many fluidization velocity correlations are available in text books. A typical correlation found in fluidization engineering by Kunii & Levenspiel is presented below.

| | |
|---|---|
| $V_m \approx \frac{g(\rho_s - \rho_g)}{150\mu} \cdot \frac{\varepsilon_m^3}{1-\varepsilon_m} \phi_s^{\,2} D_p^2$ <br> $when, \frac{D_p V_m \rho_g}{\mu} \lhd 20$ <br> The above equation is usable for smaller particle system | $\frac{1.75}{\varepsilon_m^3 \phi_s}(\frac{D_p V_m \rho_g}{\mu})^2 + \frac{150(1-\varepsilon_m)}{\varepsilon_m^3 \phi_s^2}(\frac{D_p V_m \rho_g}{\mu}) = \frac{D_p^3 \rho_g (\rho_s - \rho_g) g}{\mu^2}$ <br> $when, \frac{D_p V_m \rho_g}{\mu} \rhd 20$ <br> The above equation is usable for coarser particle system |

Legend in above equations is as below:

$V_m$ = Minimum Fluidization velocity
$\varepsilon_m$ = Void fraction
$Ø_S$ = Sphericity
µ = viscosity of gas
g = acceleration
$\rho_p$ = density of particles
$D_p$ = Diameter of the particle
$\rho_g$ = density of gas

We need to notice the following in the above equations-

**Min Fluidization velocity is proportional to Dp^2 or Dp^3 – depending on the particle size.
**Min Fluidization velocity is proportional to particle density.

The above equations are based in narrow particle distribution. In real life fluidized bed system, we have wider particle size distribution. For example in coal preparation plant from one plant to another we may not have same particle size distribution. From mines to mines the coal ash will be different in terms of composition and thus particle density is going to be different. In some case, we may have complete segregation of particles in to a region of predominantly small particles and a region of predominantly larger particles. The segregation is characterized by the abrupt change in porosity. The picture is same in case the bed has two different particle densities. The picture is shown in figure 3. When the particle sizes fall into a relatively narrow group we would have an intermediate case, as shown in figure 4. The larger size particles (or denser particles) are found grouping at bottom. There is zone where we have a mix of particles. The above theoretical exposure would now help in analyzing our problems in fluidized bed combustion boilers.

***REAL LIFE FLUIDIZED BED COMBUSTION SYSTEM***

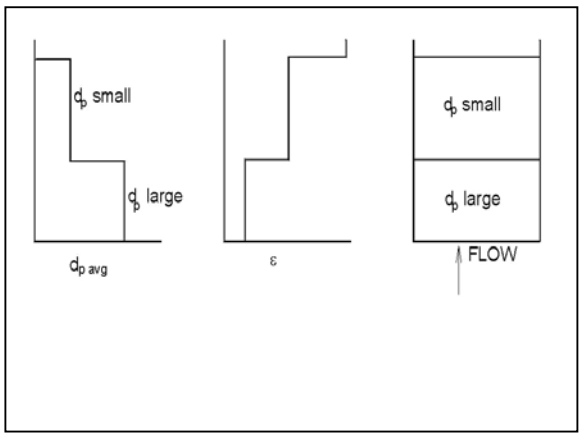


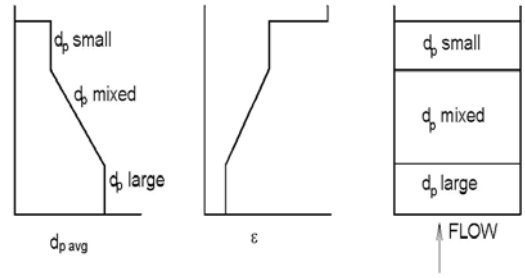


Figure 4: Fluidisation with wider (not too wide) particle distribution / wider particle density difference

In a fluidized bed combustion system, the fuel / bed material is a source of the particles. In the case of coal, the burning particles & and the burnt particles are the main contributors which decide the fluidization behaviour in the bed. The bed material which is used for start up of a bed may be particles which have been sieved from the ash obtained from Fluid bed combustor or it is generally sieved river sand / sieved crushed refractory bricks...

***ABOUT SAND***

When sand is used as bed material, particles less than 1.5 mm should be used. These particles are generally round in shape. When the sand particle happens to be on the higher size, we can notice that the sand is sharp in nature. Such sand particles are found to be erosive when the bed is not properly fluidized. It is not necessary to remove the finer portion of sand. The sand size range of 0-1.5 mm gets the best combustion of fuels in many installations. Sand is practically a crystallized material and does not have pores.

***ABOUT CRUSHED REFRACTORY***

The refractory bricks are made from recycled bricks & fresh refractory clay. The old refractory bricks dismantled from ore melting furnaces and many other refractory furnaces are crushed to minus 3mm as part of raw material preparation in refractory manufacturing industry. The refractory grog prepared in this way is screened in 20 & 8 mesh and the material that is lying in between is used as bed material for FBC. This bed material is found to be less erosive. As the density of this material is lesser as compared to sand, the size range is 2.35 to 0.85 (corresponding to mesh numbers 20 & 8). Higher size has been permitted here as the particle density is lower due to presence of pores.

***ABOUT FUEL PARTICLE SIZE- COAL FIRED BOILERS***

Even if the sand / refractory bed material conforms to required size range, over a period of FBC operation, the entire particles are going to be replaced with the ash particles generated from fuel.

Thus the fuel sizing is very critical for trouble free FBC operation. Ignorance to maintain screen system at coal handling plant can lead to accumulation of oversize particles. Once the over size particles are accumulated, the bed goes for spouting. Even the heavier particles get thrown out of the bed. The loss on ignition would go up if the furnace residence time is less. Otherwise we may not notice it. Again if the coal is reactive with high volatile matter, the unburnt in ash may not go high. In the case of under bed firing, the erosion of bed coils is accelerated due to violent turbulence at fuel feed points. The generation would come down as the particle size increases. This is due to the fact that

smaller particles have more surface area to conduct the heat to bed heat transfer surfaces.

### *ABOUT FUEL PARTICLE SIZE- AGRO FUEL FIRED BOILERS*

In the case of agro fuels such as rice husk, de-oiled bran (DOB), ground nut shell the ash from fuel does not contribute to bed particle size. Whatever the bed material used gradually disintegrates and the fines go out of bed. Regular addition of bed material is required in order to maintain the bed height. DOB fired boilers experience peculiar problem of heavier particle generation due to melting of ash. DOB ash melts and agglomerates to over the sand / bed material. More sand will be required to offset the bed particles becoming heavier. In general agro fuels are having lesser density as compared to bed material and they try to leave the bed earlier. Using finer material helps to achieve a good bed expansion and binds the fuel particles better.

Stone ingress in husk fired boilers is well known among old installations. More drains had been added in some cases to bring out the stones. The stone removal by mechanical screen system is not effective. Only way to get the best from these combustors is to resort to frequent draining and recharging screened bed material. Fine sand is the right option for husk fired boilers as the disintegration of the refractory type bed material could increase the operational cost.

### *ABOUT FUEL PARTICLE DOLACHAR FIRED BOILERS*

Dolachar & coal are fired together in boilers used in sponge iron industries. The Dolochar contains iron particles which are heavier. As one can expect the bed can have segregation of particles to bottom of bed. In many cases, the operators ignore this. Once a bed lands in to segregation of particles, there is no way out in the case of flat distributor plate designs. Only open bottom design can pull out the oversize particles which settle at bottom. Alternately sloped distributor plate / DP with many drains can help to control the particle separation. Particles separation when takes place preferential erosion of bed coils is seen.

In these combustors, the generation of bed ash is also more. We may not find a requirement to add bed material. Except for a fresh start up we may not use iron free bed material. Bed coils in these boilers call for early replacement and the availability of the boiler is greatly disturbed due to unscheduled shut downs. In under bed feed system, the erosion of bed coils is localized whereas in overbed the erosion is not so, provided we keep removing heavier lot. If heavier lot is allowed to accumulate, the bed coil erosion is of different kind. The coil is seen eroded in between studs to as in photograph 4. There is a gross erosion of bed coil. All these troubles are related to iron accumulation. They solution could be a continuous bed ash iron removal system. The bed ash must be cooled and discharged to an automated magnetic separator system & over size screen system. The screened bed material should be recharged to bed through a bed material silo and feeder system. In a case where I had visited, the plant in charge had resorted to magnetic plate for removal of iron from bed ash. See photograph 5. Yet the rate of accumulation was so high the iron % in bed ash did not come down. The customer was advised to resort to continuous bed ash removal and recharge system. More bed drains have been advised so that the removal is effective.

### *CASE STUDY 1- RELATED TO FLUIDIZATION*

This is a 90 TPH coal fired AFBC boiler with over bed feed arrangement. The customer was restarting the boiler after a shut down from cold condition after 5 days shut period. The bed material was not changed. Whatever remained before the shut had been used as such. Naturally we can expect that particle range will be right from fly ash dust to coarser ash. As this boiler was provided with over bed start up burners, the height of the bed material had to be kept to 600-700 mm in order to cover up the bed coil. The burner was put on for 3 hrs to raise the boiler pressure slowly and to promote circulation

in bed coils & other evaporative circuits. In over bed burner start up system, the bed never gets heated up beyond 150 deg C. The airbox pressure was raised to 800 mmWC and the coal feed was done. The powder content in bed material got separated to the top and gave a picture as if the bed was fluidizing. The bed plate design was checked for MCR pressure drop. It worked out to be 300 mmWC. That means nearly 900 mmWC air nozzle pressure drop will be required to set a cold Fluidization. When the FD fan can not give 1500 mmWC, the question of thorough fluidization can not be achieved. There were temperature differences between bed thermocouples even after 12hrs after start up. In this situation whatever fluidization which was observed was clearly a regime of fluidization with two sets of particle groups. Now to correct the situation I simply drained the bed material from several drain points simultaneously to bring out the coarser fraction of material at the bottom. After 4 hrs, we had seen that all the bed temperatures read the same value. Further, the customer was advised to use finer bed material. I recommended minus 1.5 mm sand. I advised not to discard the finer fraction of bed material that is less than 0.5 mm.

### *CASE STUDY 2- RELATED TO FLUIDIZATION*

This is a coal fired AFBC boiler with under bed feed arrangement. Within 2 months of changing over to new lot of imported coal, the plant suffered bed coil erosion. The unit experienced severe iron accumulations in bed ash. It was as high as 33%. The source was found to be the high iron content in coal ash itself. A model calculation done proved that we need to increase the fresh bed material feed rate to 25% of fuel feed in order to limit the iron in bed ash to 5.6%. Incidentally more the iron content in coal, the ash fusion temperatures could be lower. The bed may begin to generate clinkers as well (see photo).

Table 1- Ash analysis summary – $Fe_2O_3$ has increased in recent coal supply.

| Ash constituents | Bed ash at present | Bed material | Coal used before Failure | | Coal –used of late |
|---|---|---|---|---|---|
| | | | Coal 1 | Coal 2 | |
| $SiO_2$ | 27.11 | 53 | 48.27 | 56.79 | 35.09 |
| $Al_2O_3$ | 15 | 34.5 | 26.31 | 27.36 | 19.46 |
| $Fe_2O_3$ | 33.4 | 0.8 | 6.12 | 6.19 | 29.88 |
| CaO | 0.234 | 3.5 | 9.65 | 3.19 | 5.28 |
| MgO | 0.56 | 2.1 | 1.4 | 0.53 | 1.91 |
| $Na_2O$ | 2.898 | - | 1.2 | 0.81 | 1.34 |
| $K_2O$ | 0.31 | - | 0.87 | 1.41 | 2.2 |
| $SO_3$ | - | - | 0.244 | 0.2 | 0.49 |

### *CASE STUDY 3- RELATED TO FLUIDIZATION*

This was a rice husk fired boiler. The customer experienced severe polishing of bed tubes. The steam generation had come down drastically. Rice husk fired boilers need regular make up of bed material. When I visited I found the bed ash drained from the bed was heavier. When checked up with a magnet we noticed that the bed ash contained 40% iron. The source of iron was found to be the bed material itself. The crushed refractory as explained earlier is made from crushing used bricks removed iron melting furnaces. Naturally the iron content in the crushed material has to be more. The vendor did not separate the iron which was the normal process used for making refractory bricks to meet the IS 8 specification bricks. The customer was advised to change over to fine river sand.

### *CASE STUDY 4- RELATED TO FLUIDIZATION*

This case is a 100 TPH Boiler which was designed for high DP drop operation by design. The cold Fluidization was checked by me in person. With a bed height of 300 mm and with air box pressure of

1000 mmWC, the bed did not fluidize. I requested the customer to change over to finer bed material for start up. I explained that the bed would not fully fluidize. I have enclosed photo 5, which proved that the bed did not fluidize even after 12 hrs after the coal feeding was commenced. I recommended that fresh fine bed material had to be added to large extent simultaneously drain the bed that did not fluidize initially. Cold fluidization is being ignored by many in the recent boilers which were provided with overbed start up burners. When the bed is designed with hot air generator this would not be a problem. Had the boiler been provided with charcoal start up burner lances, the boiler would have never started. It would have experienced clinkering every time. In fact I had attended a case where the client got the entire set of air nozzles replaced with higher diameter holes to have the cold fluidization.

***FINAL WORD***

Boiler operators need to realize the importance of the right size of bed material with the right particle density is important for a thorough Fluidization. Use of mechanized bed ash / bed material screen system, regular sieve & ash analysis of fuel, regular measurement of sieve analysis bed ash, frequent check in iron content of bed ash & bed material would help to improve get the best from the AFBC boilers. Manufacturers need to realize that the additional drains are a must for smooth operation of FBC boilers. High DP drop in bed would give problems in setting the cold Fluidization. Cold Fluidization inspection should be part of start up process and can not be compromised.

---

Photo 1-heavier particles are thrown in bed

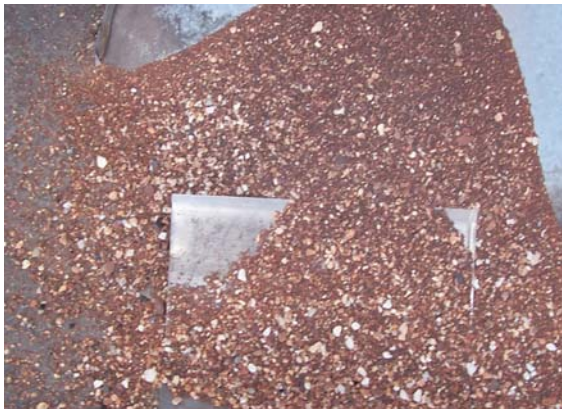

Photo 2- heavier particles collected at inspection door.

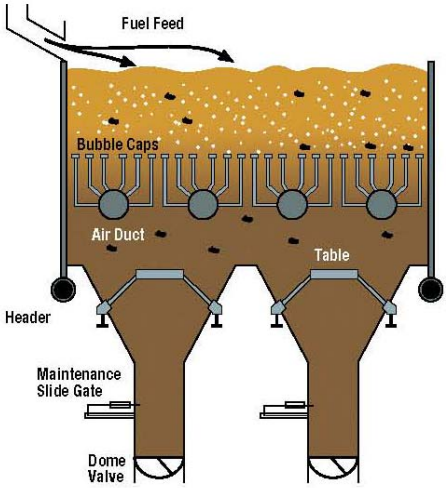


Photo 3-Open bottom furnace originally designed by B&W

Photo 4- bed coil erosion in overbed fed boiler. The heavier particles settling at bottom of the bed has caused erosion.

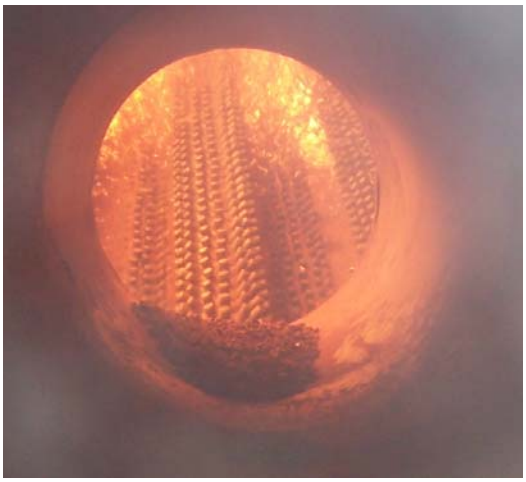

Photo 5-Improper fluidization –High DP drop

Photo 6- Fusion of ash in case of high iron.

Photo 7: A sample of bed ash was checked in a boiler where the total bed defluidized due to iron containing bed ash particles. The weight % of iron containing particles is found to be 51.9%.

# THERMAL EXPANSION OF BOILERS

## *INTRODUCTION*

Boiler is made up of plates, tubes, pipes and simply steel of various grades depending upon the duty conditions. Depending on the service such as cold air / hot air / cold flue gas / hot flue gas / cold water / hot water / saturated steam / superheated steam thermal expansion movement of steel materials take place to different extent in Boiler. Ignorance of thermal expansion movement of boiler components in design / installation may lead to failures of boiler components. The damage to boiler components can be costly affecting human life in some cases. The article is aimed at imparting awareness among boiler users.

## *ABSOLUTE EXPANSION & DIFFERENTIAL EXPANSION*

The boiler has an absolute expansion movement as a total mass. There are places where there is a relative expansion movement, which can cause stress in parts. A packaged boiler expanding as a total can be regarded as a single mass movement.

## THE PACKAGED BOILER

### *Boiler shell*

Shell type packaged boilers are generally mounted on two saddles. The boiler is to be mounted on base plates on the RCC footing. One of the saddles will be a fixed support and the other is a sliding support. At the fixed support the boiler will be fastened to the foundation bolt or held in place by means of stoppers. At the sliding support, slippery medium is required between the saddle and the base plate. The locknut is loosened by half a turn to facilitate expansion. The guide blocks are provided to make the boiler move in the desired direction. One may observe breakages of RCC pedestals where this aspect is ignored.

### *Ducting*

In packages boilers, flue gas ducting to chimney would need an expansion joint to accommodate the duct expansion due to heat. The expansion joint is generally metallic and pre-expanded. The expansion joint would be compressed when the duct expands due to heat. An expansion joint may be with a single or multiple bellows as illustrated in figure 1.

### *Water & steam piping*

In packages boilers, the feed piping are generally small and flexible and thus may not call for spring hangers / supports. The steam piping is generally managed with fixed and guiding supports and expansion loops. Expansion loops accommodate the displacement due to thermal expansion. See the typical illustration in figure 2.

## *LARGER CAPACITY BOILERS*

Larger capacity boilers are mostly designed for high pressures & high steam temperatures. The thermal expansion phenomenon is more seen in many parts of the boiler. When the design pressures are higher the strain on the boiler components are not tolerable. In several components the design should address the differential expansion aspect.

## *PRESSURE PARTS*

### *STEAM DRUM*

A steam drum may be either top supported or bottom supported or floating. Top supported steam drum can be saddle supported or hanger supported. The steam drum may be floating free through support from downcomer or from bank tubes.

***Case 1. Saddle support from base.***

When supported from base the steam drum will stretch in length due to heat. The drum movement must be generally arrested at the centre and allowed to expand linearly towards the ends. This is taken care of stopper blocks. The drum base plates must be provided with teflon sheet so that it freely slips over the fixed supporting surface. Positioning fasteners when provided, must be made loose by ½ a turn and nuts must be tack welded with bolts. Machined base plates help in free movement. Instead of teflon sheet, graphite lubrication or dry lubricant may also form a slippery surface for the drum to freely expand.

***Case 2. Hanger supports.***

The steam drum may be supported through hangers from top structure. In such a case the hangers are provided with rocker plates to facilitate from rotational freedom for the hangers. The rocker directions are important and shall be as shown.

***Case 3. Bottom supported through downcomers***

The downcomer supports are critical supports and vulnerable for buckling if the drum is not guided for vertical expansion. In some cases the steam drum may be physically attached to waterwall and thus the expansion may be guided. Otherwise it is necessary to provide guides, which will make the drum to go up vertically without any lateral movement in the direction perpendicular to the drum axis. When supported on downcomers, the support base of downcomer should be free for movement along drum axis. There will have to be guides, which ensure the movement is free in the desired direction. Teflon base / graphite lubricated base plates are required to allow for the slip.

In some cases the downcomer may be rigidly attached to waterwall giving a complete lateral support along the height.

### *LOWER DRUM*

The lower drum may be bottom supported or hanging from top drum through the bank tubes.

***Case 1. Lower drum bottom supported***

The lower drum may be base supported with three saddles or two saddles. In the case of three saddles supported design the centre one will be the zero point of expansion. In the case of two-saddle support design an external stopper or guide is required to guide the boiler expansion. A restraint is required to ensure the drum center point is anchored to the structure.

***Case 2. Lower drum hanging from top through bank tubes***

When the lower drum is supported through bank tubes, the mud drum should be free from any restraint.

***ASH HOPPERS***

The ash hoppers are generally attached to pressure parts such as waterwall second pass, Lower drum of boiler bank, Economiser casing, Airheater base frame, Bag filter / ESP fields. In all the cases, the ash hoppers move along with the equipment or part to which they are attached. Suitable metallic expansion joints are added. It is a good practice to hang the ash feeders from the flange of ash hopper. External supported ash feeders act as restraints for expansion and hence care is to be taken here. Flexible metallic bellows are used to care of downward expansion or linear movement of ash hopper.

***DOWNCOMERS***

Downcomers start from steam drum in case of singe drum design. In case of bidrum design, downcomers start from steam drum or lower drum depending on the designer's choice.

Downcomers should preferably be attached to waterwall. If unavoidable, then external supports are provided. Flexibility is a very important factor to avoid development of thermal stresses. Most of the time the stresses can be made below allowable limits only by providing spring supports. Spring supports support the piping allowing some deflection of the pipe. Only when there is a constraint for expansion movement, the stresses are high.

In some cases, it may not be necessary to provide spring supports, as the piping itself may be flexible to accommodate the thermal expansion by elastic deflection.

***RISERS***

Riser tubes are usually quite a good number of them. It is more sensible to support these pipes from the water wall top headers. This way there will not be any differential expansion between waterwall & risers. External supported risers are susceptible for undue stresses.

***WATERWALL***

There are basically two types of waterwall, namely fin-welded waterwall & loose tube waterwall.
Top supported waterwall is free to expand downwards. Ensuring the free expansion by suitable clearances to the combustors is very important.

Bottom supported waterwall is to be supported at same level. Differences at supporting level can lead to tearing of waterwall fin weldment.

In the case of loose tube waterwall, the boiler should necessarily be supported from top. This will ensure the tubes do not buckle or distort laterally. Improper supporting system leads to leakages in roof refractory work and ash leakage outside.

***BUCKSTAYS***

Membrane waterwall panels are stiffened with buckstays to withstand furnace pressure fluctuation. The buckstays being unheated are not going to expand as the way waterwall expands. The corner pins should allow the expansion movement of waterwall. Improper erection of buckstays can lead to failure or distortion of waterwall. The buckstays have anchor points, which would generally coincide the zero axis of boiler expansion.

***SATURATED STEAM LINKS***

The link piping between drum and superheater can be very well supported from the top waterwall header. This is practical for top supported Superheater headers. For horizontal Superheaters the links should be supported properly allowing expansion movement. Constant load hangers or variable spring hangers are required to support the piping.

***SUPERHEATER COIL ASSEMBLY***

Superheater assemblies, which are hung from waterwall top headers, the downward movement of coils should be restricted. The nose panel to Superheater coils clearance should be adequate. Otherwise the coils become distorted.

In horizontal superheater, the waterwall to Superheater clearances are important. Otherwise the superheater coils get distorted.

***SUPERHEATER HEADERS***

Superheater intermediate headers & Final steam headers expand differentially as compared to waterwall panels. When headers are supported from waterwall headers through saddles, differential expansion must be considered. Where SH tubes pass through the space between waterwall tubes, the SH tube / Water wall tube space is sealed by plates. There should be flexibility in Superheater stubs for differential expansion of Superheater.

***REFRACTORY***

Refractory walls expand. The coefficient of linear expansion of refractory is different as compared to any steel material to which are they are attached or resting on.

The hot wall expansion length is more as compared to cold wall expansion across the thickness of the wall.

For this reason expansion joints are given along the hot face during construction. Similarly as the refractory walls are expanding, at the end they have a total movement resulting in pushing them each other. This is taken care of by leaving gaps before. Where castable refractory is used in the boiler, to take care of differential expansion, expansion joints are given. Even the anchors have linear expansion. To take care of this, plastic anchor covers are used over steel anchors. Wax is applied over anchors so that there is gap over the steel anchors, once the refractory is heated up while in service.

***TUBULAR AIRPREHEATER***

In most of the tubular airpreheater, the hot flue gas passes through the tubes and relatively cold air passes around the tubes. There will be relative expansion between the tubes and the casing. To take care of this a metallic expansion joint is provided as shown in the sketch.

***PIPING***

The expansion movement of piping is the greatest in the boiler. The piping is always between equipment, which are usually stationary. At the terminal point the piping is usually supported rigidly. The piping in between stretches as the heating takes place. The piping needs some kind of flexible support. This is provided by means of spring hangers. The spring hangers support the piping and at the same time allow movement of piping so that the piping is not strained.

Piping can be carrying fuel oil, gas, hot water, LP steam, HP steam, Condensate. Depending on the service, the expansion of piping will be to a different extent.

In case of piping terminating at turbine or feed pumps, the forces exerted by piping on the flanges should be zero as otherwise it would cause damage to the connected equipment. The design of the piping is to be done carefully. Constant load hangers are to be used for this purpose.

***EXPANSION POINTER***

Expansion pointers are used for verifying the expansion movement of the boiler. These are attached to the drum ends / bottom or top header ends. When the boiler is under commissioning stage the expansion must be monitored. Depending on the anchor points in X-axis and Y-axis, the expansion is predicted by designers. The same is counter checked at site. Deviations in the form of non-uniform expansion should be checked for.

***DUCTS***

Ducts expand in length. Ducts expand in other two dimensions also. The thermal expansion along the length may push the connecting equipment. For example a hot air duct from an airheater will push the windbox. This is taken care of expansion joints. Flexible fabric expansion joints easily take care of expansion in all three directions. Metallic expansion joints of single bellow design would accommodate linear expansion. These expansion joints are pre-pulled and locked at boiler vendor’s place. Only after erection of complete ducting, the transportation clamps or the locks are released. The thermal expansion movement now compresses the expansion joint. Expansion joints are required practically wherever the duct takes take a turn. Further at all equipment terminal points with fans / windbox, fuel feeding equipment, chimney, Fans, isolation guillotine gates, the expansion joints are to be provided.

***FEEDBACK FROM BOILER INSTALLATIONS***

Failures to account thermal expansion in design or erection can lead to several types of failures. Author had diagnosed some boiler problems such as piping distortions, boiler membrane waterwall failures, seal plates failures, ash leakages, and repeated flange leakages. The cause had been thermal expansion. It may be true that some of the readers may have any of the above-referred problems in their installations. Care at design or aptly at erection stage would help to prevent failures due to thermal expansion.

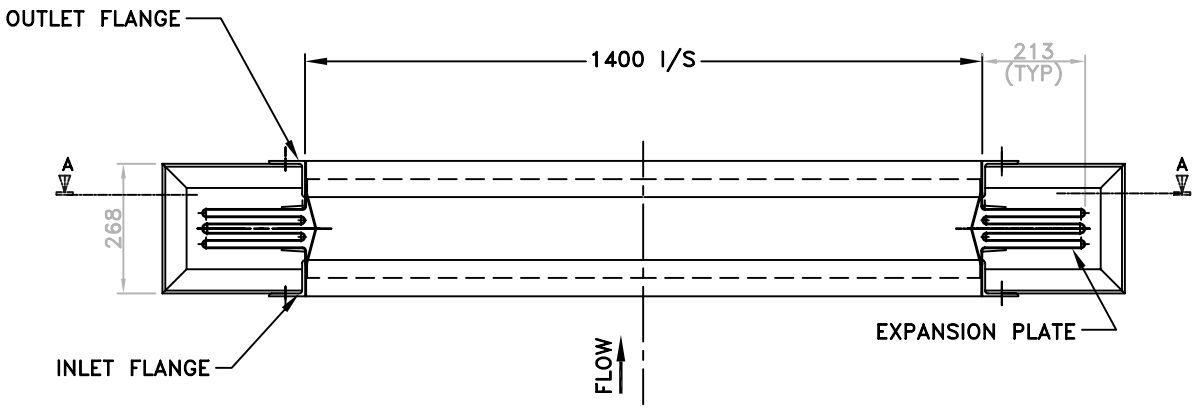


SECTIONAL ELEVATION

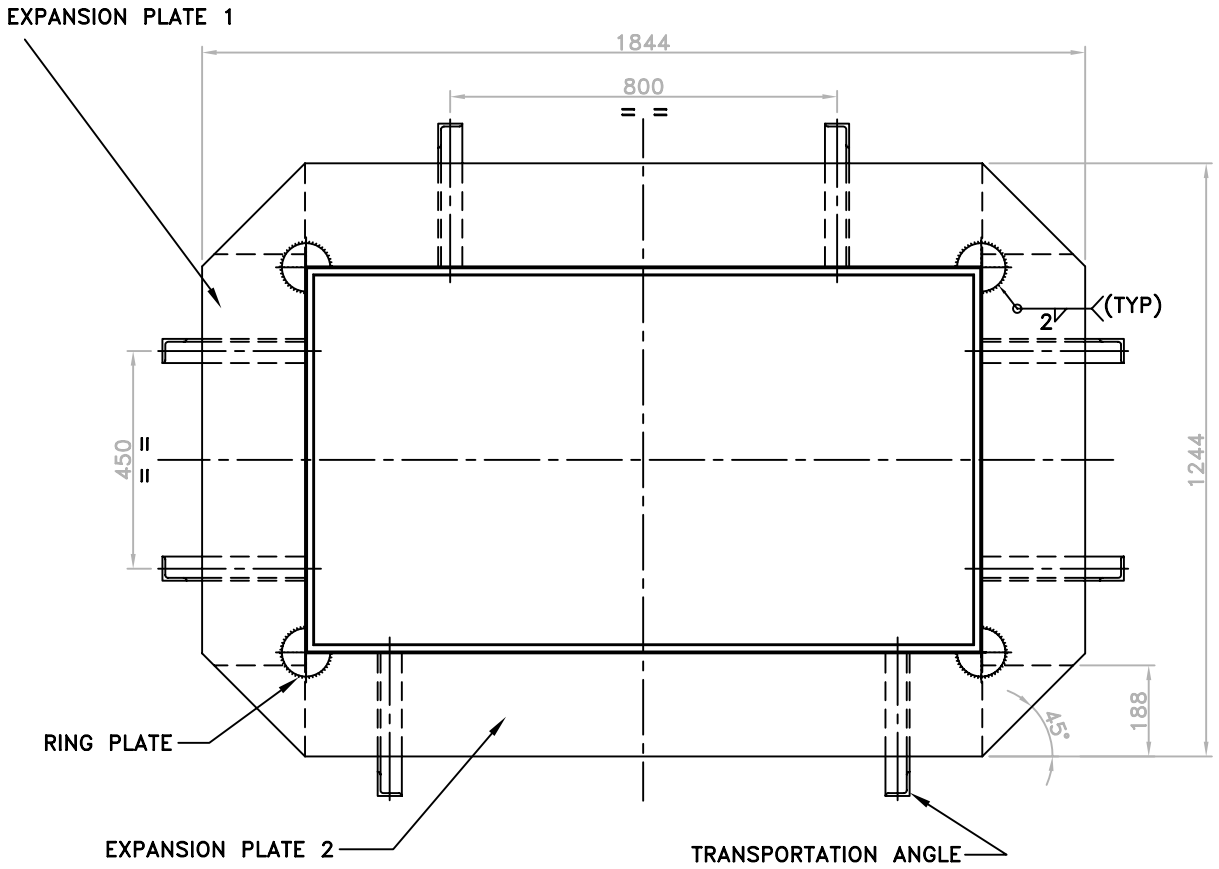


SECTION – AA

FIGURE NO.1 MULTIPLE BELLOW EXPANSION JOINT

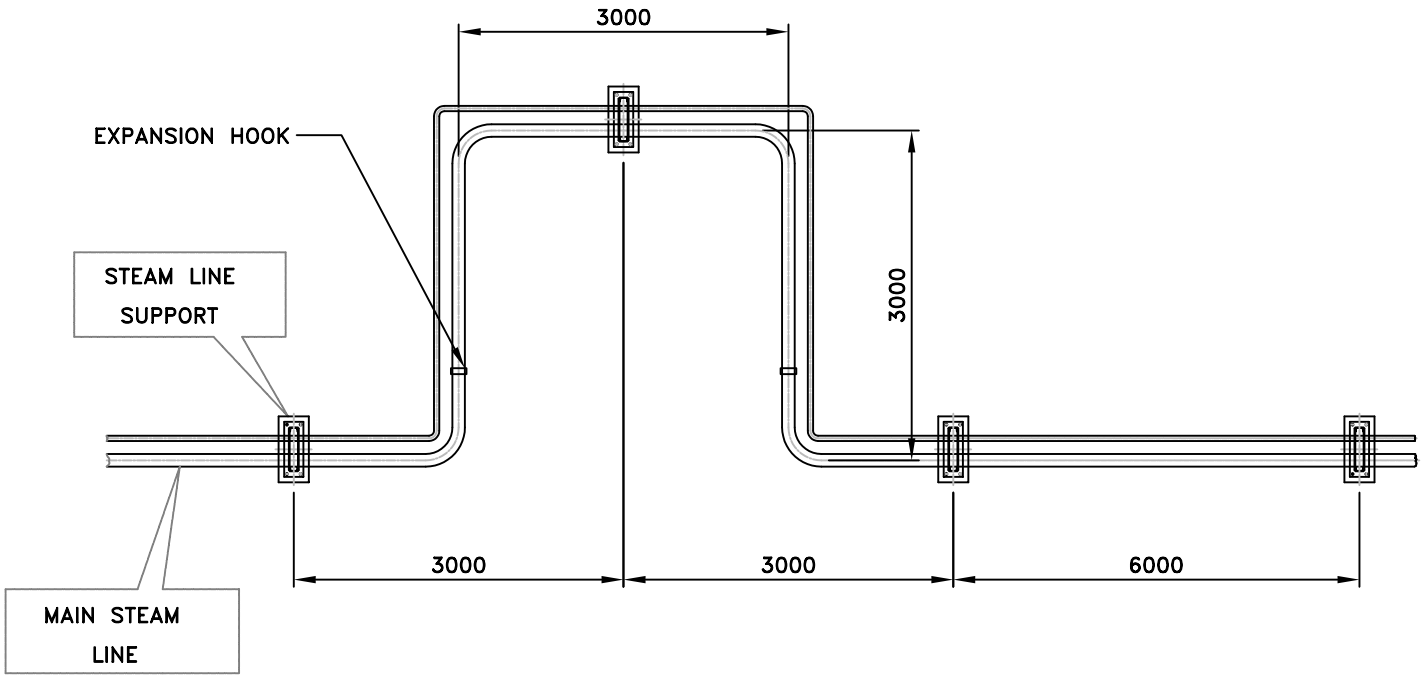


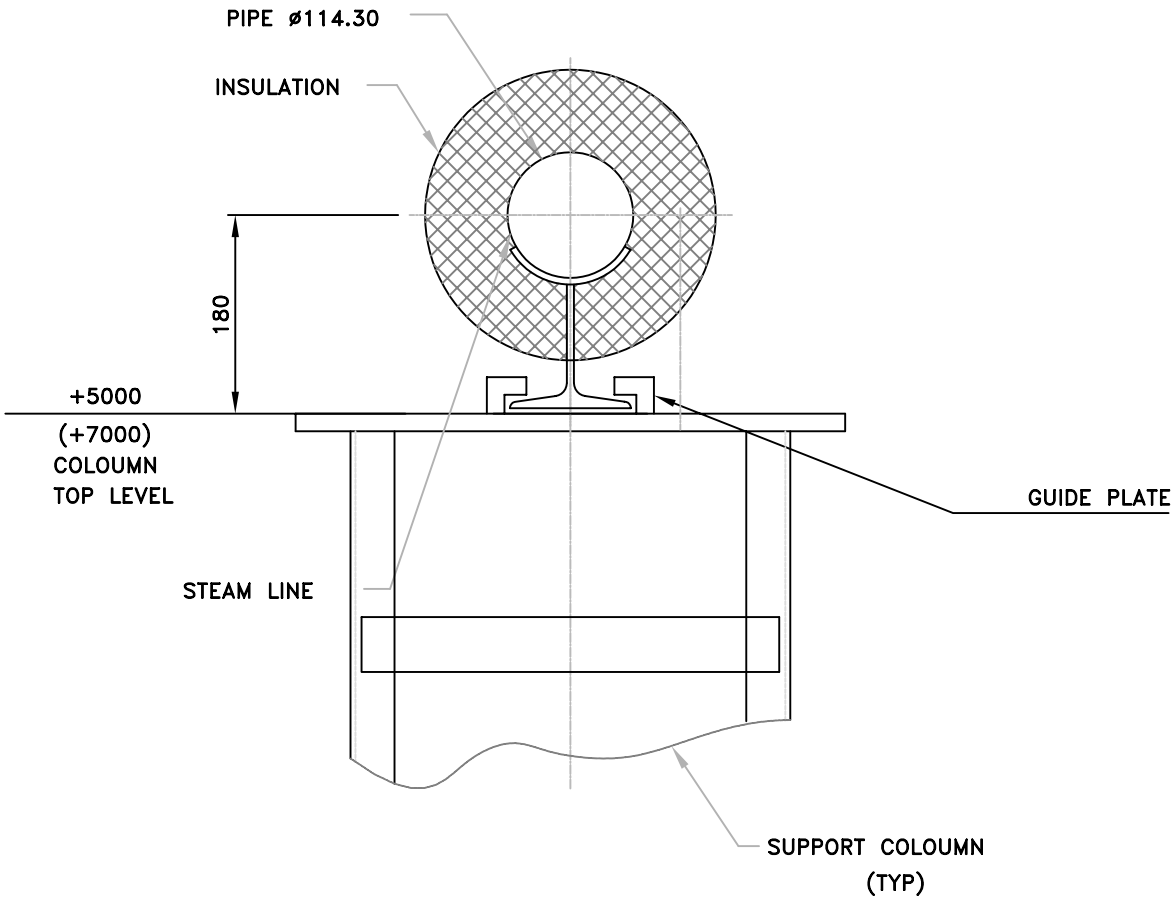


FIGURE NO.2 TYPICAL STEAM PIPING LAYOUT

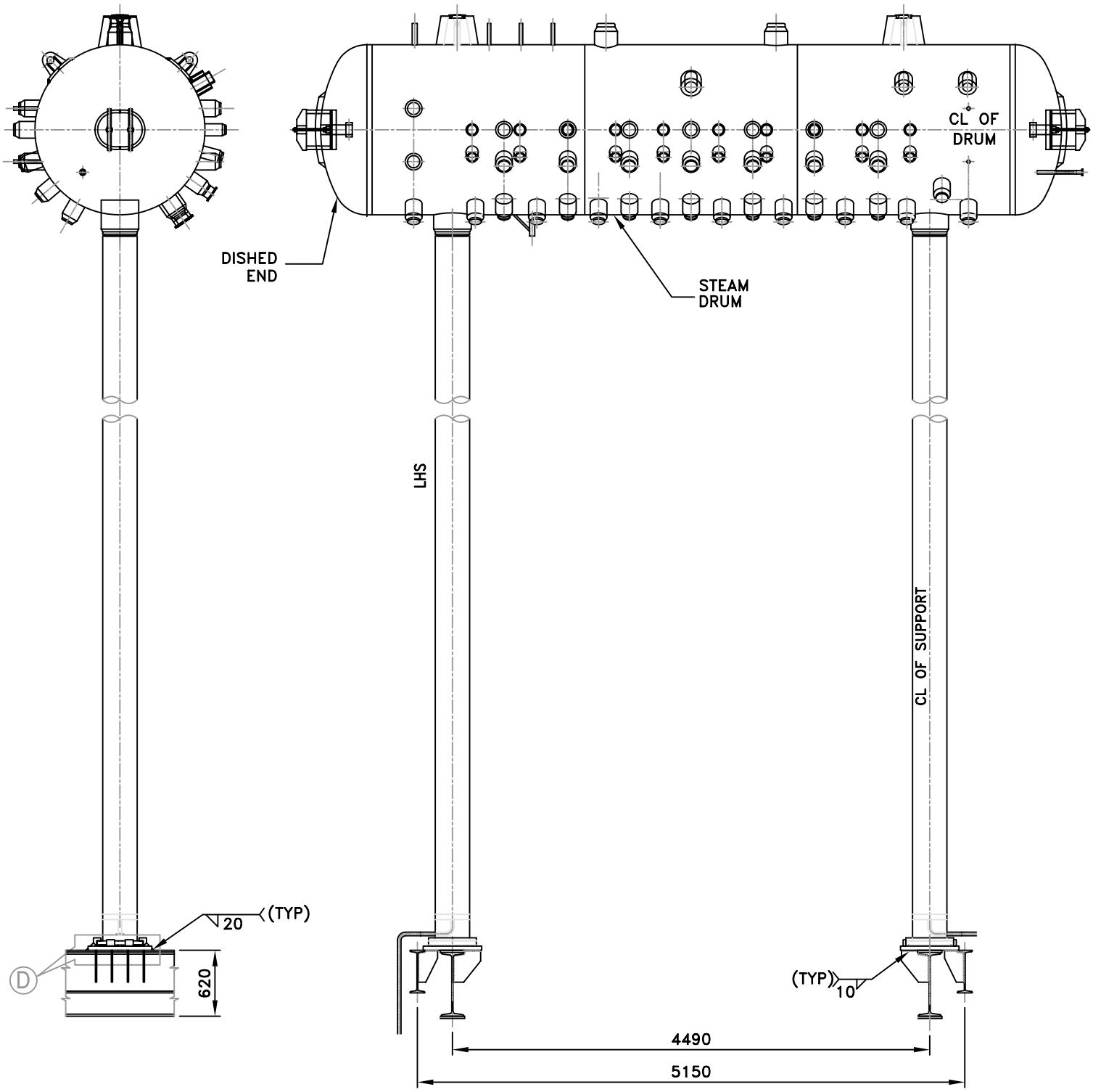


SIDE VIEW

FRONT VIEW

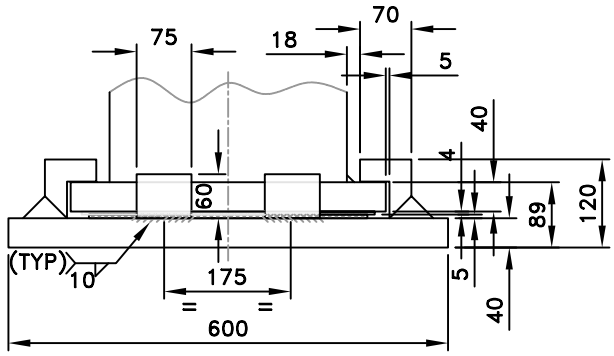


DETAIL–D

FIGURE 3 (A) DOWNCOMER SUPPORTS FOR STEAM DRUM

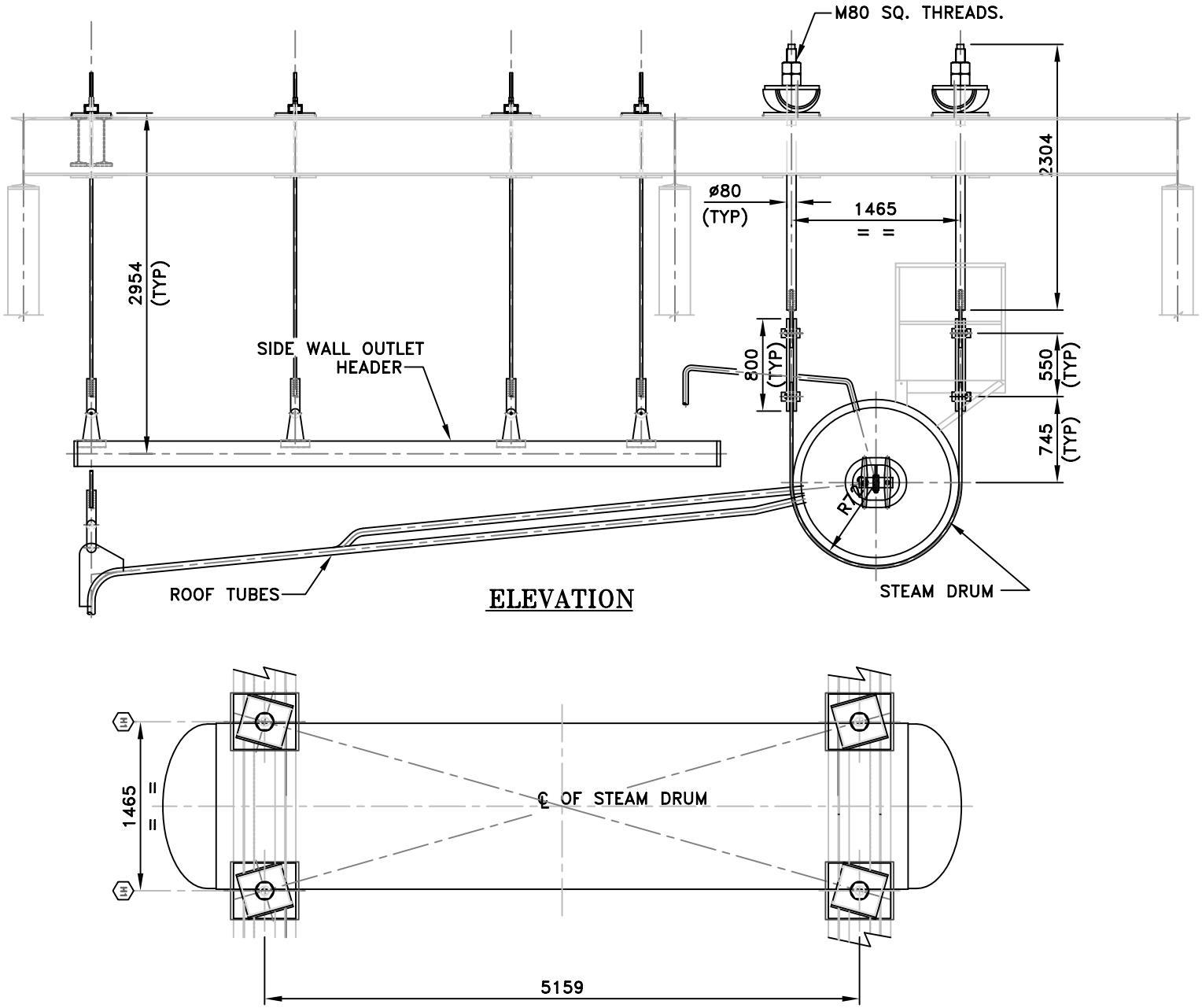


FIGURE NO.3 (B) PLAN VIEW SHOWING THE ROCKERS OF DRUM HANGERS

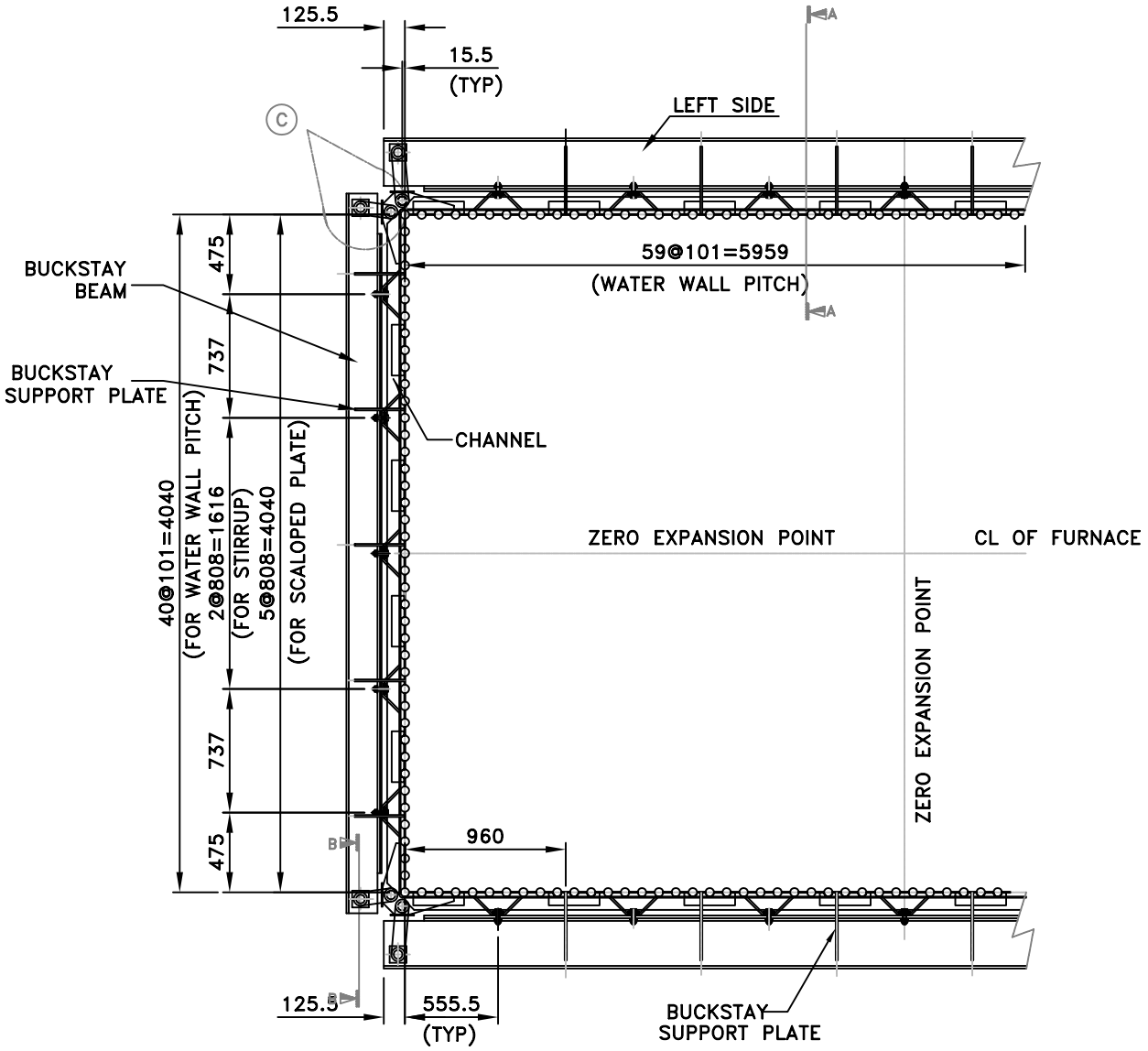


FIGURE NO.4 BUCKSTAY ARRANGEMENT FOR WATER WALL TUBES

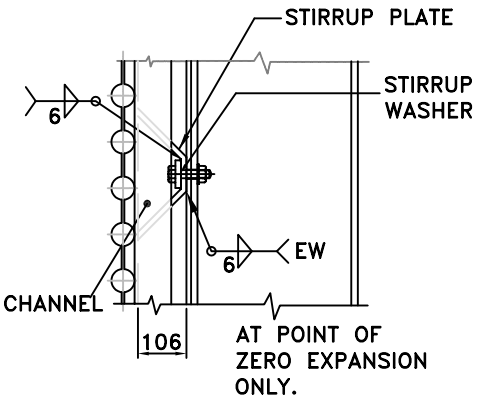


SECTION – AA

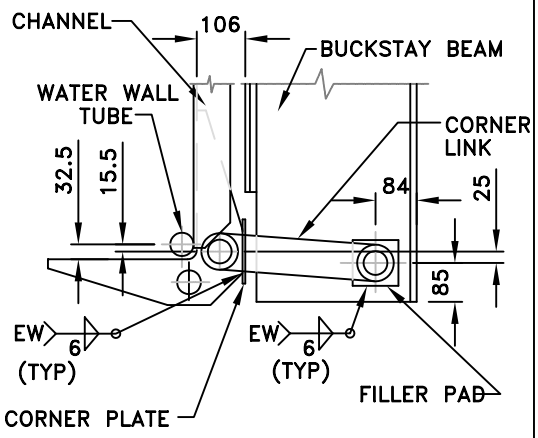


SECTION – BB

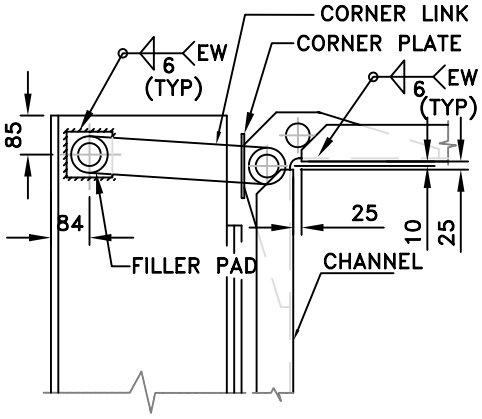


DETAIL – C

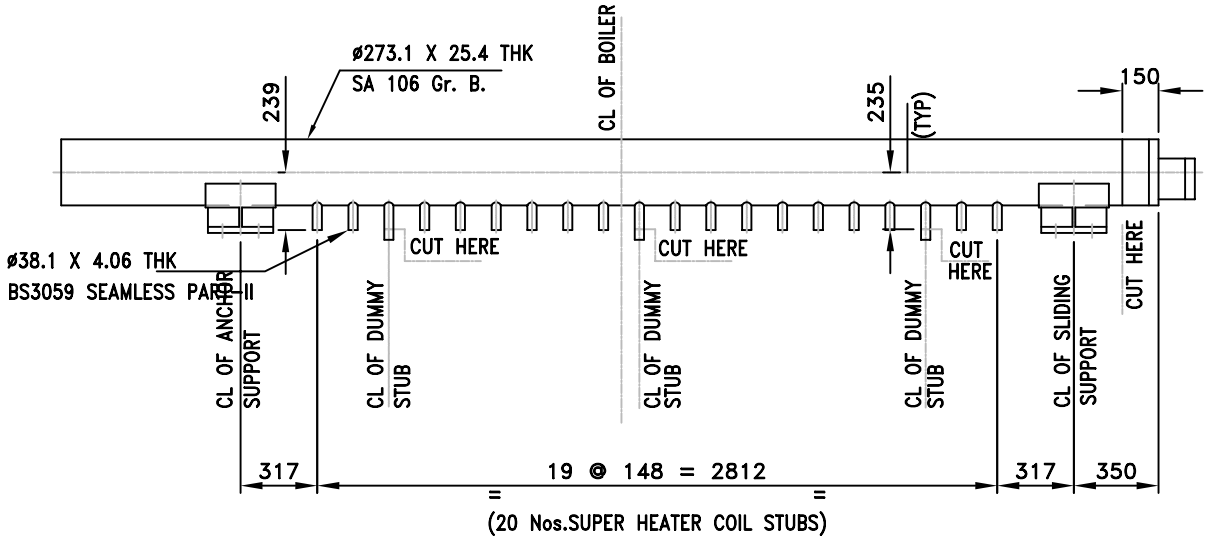


ELEVATION

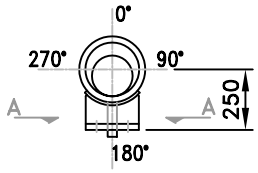


SIDE VIEW

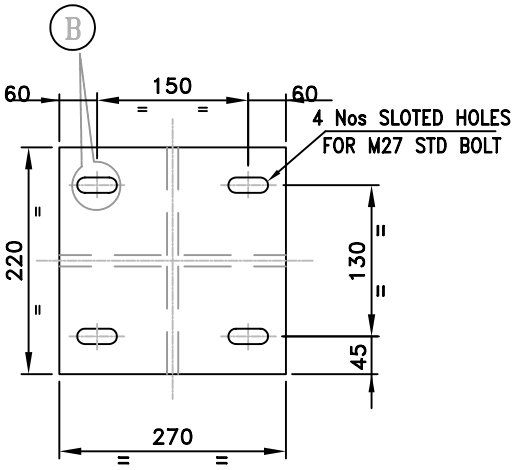


VIEW–AA

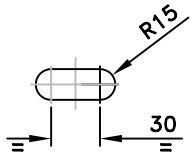


DETAIL – B

FIGURE NO.5 SUPERHEATER EXPANSION ARRANGEMENT AT SUPPORT LOCATIONS OVER SIDE WALL OUTLET HEADERS

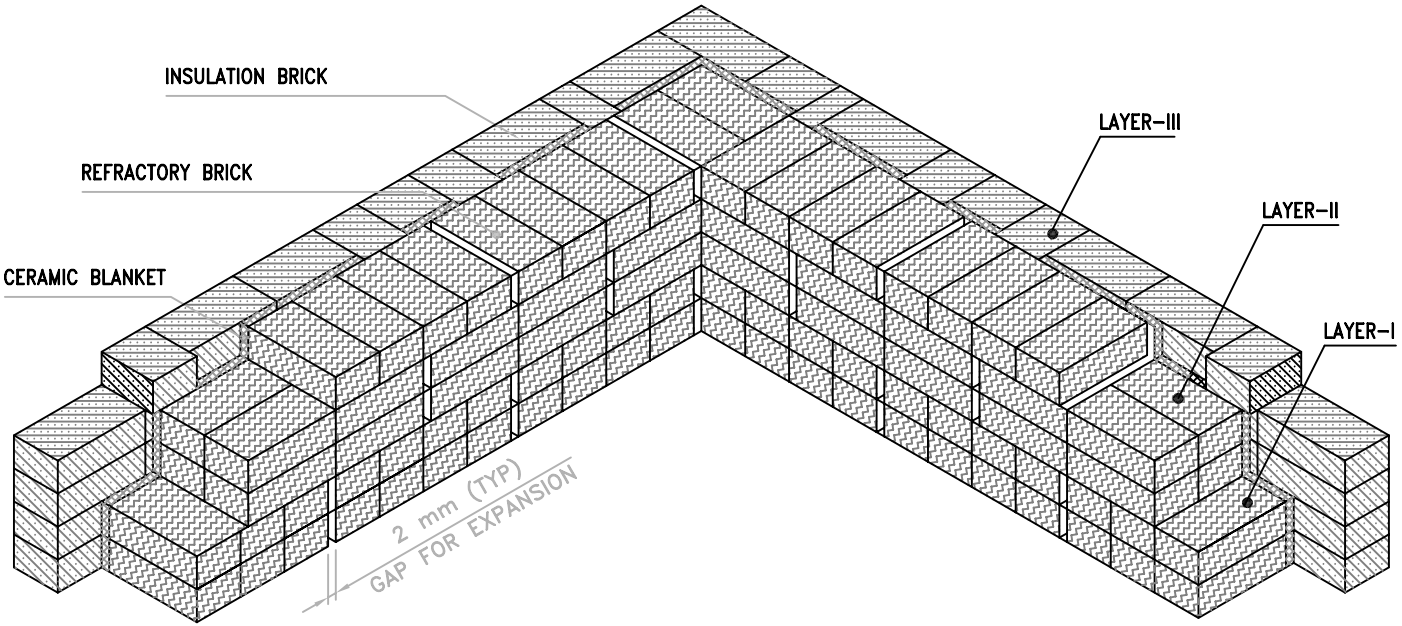


FURNACE WALL CONSTRUCTION ARRANGEMENT

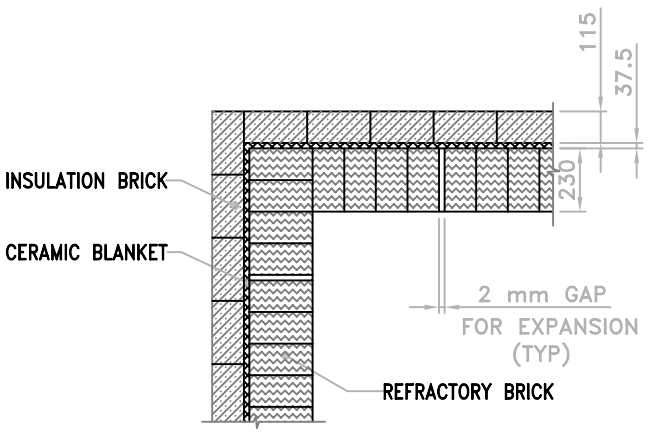


LAYER I

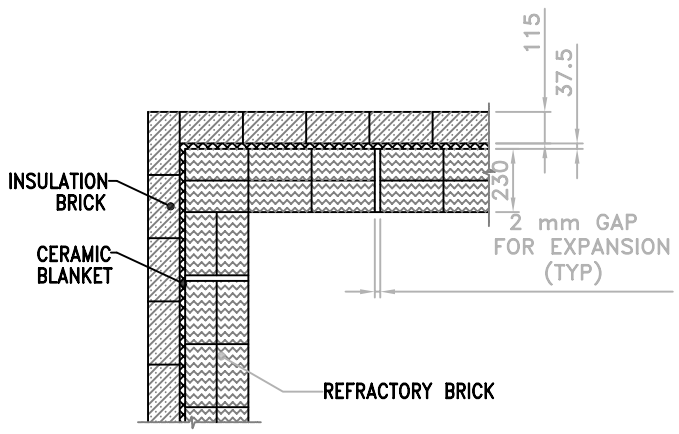


LAYER II

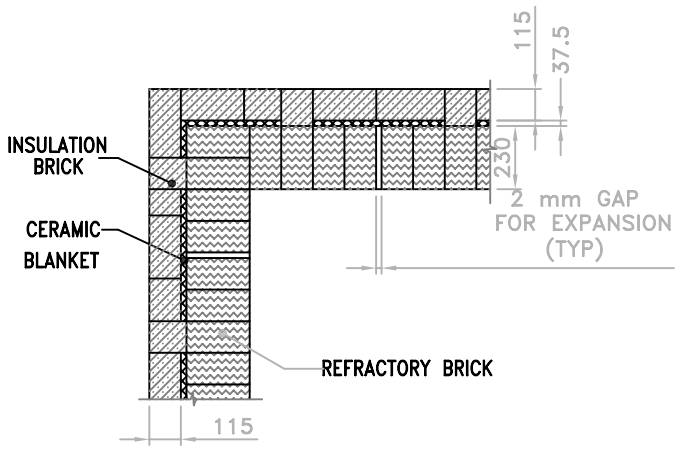


LAYER III

FIGURE NO.6 TYPICAL FURNACE REFRACTORY ARRANGEMENT

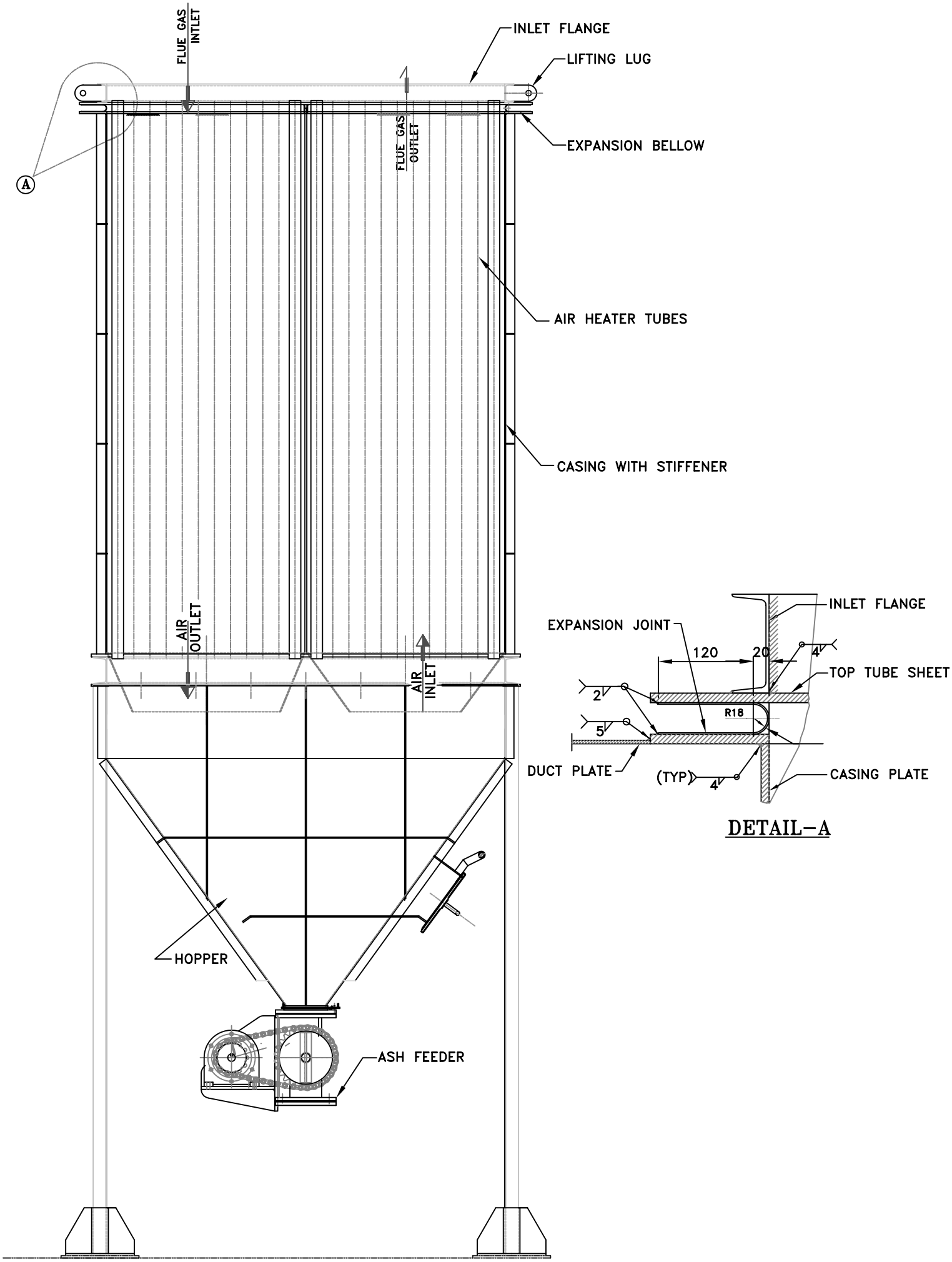


FIGURE NO.7 EXPANSION JOINT OF AIRPREHEATER

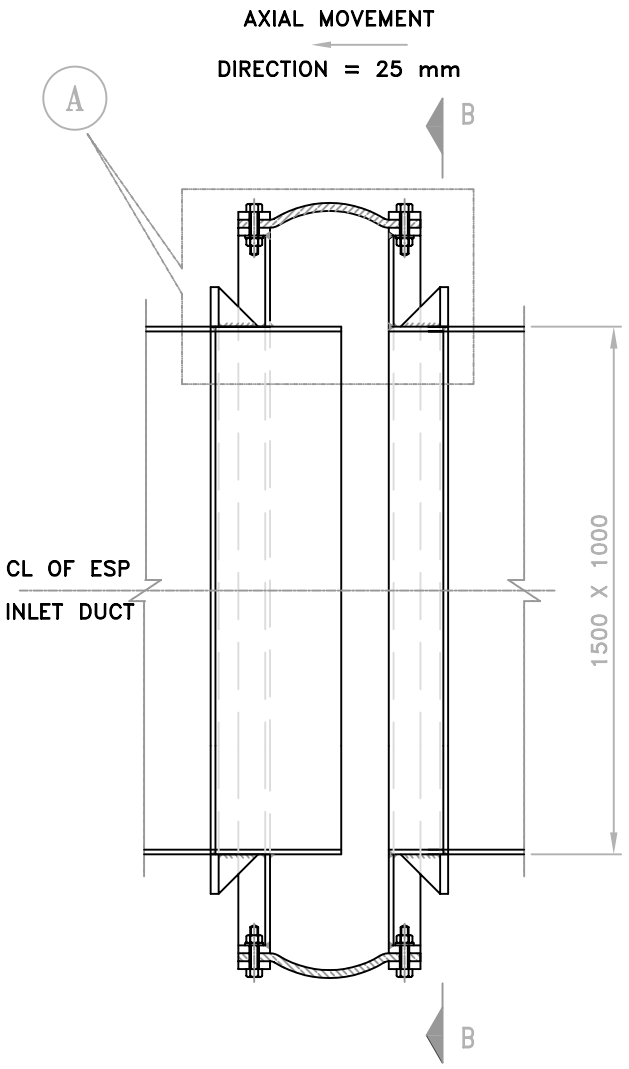


SECTIONAL ELEVATION

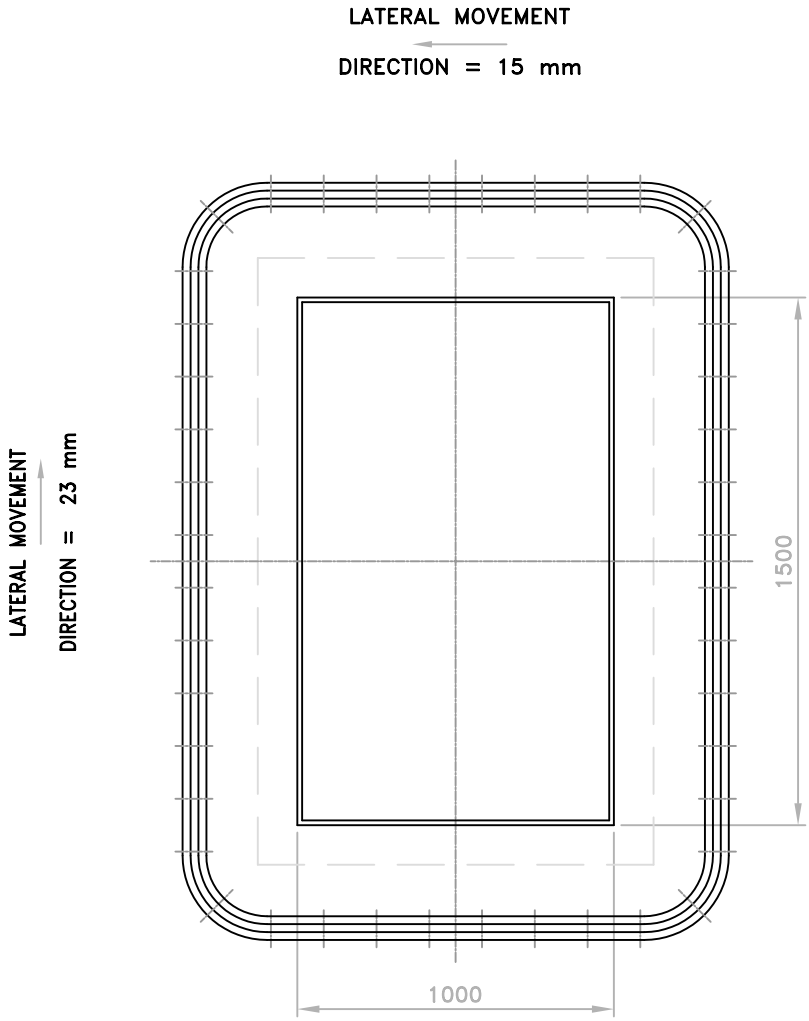


SECTION – BB

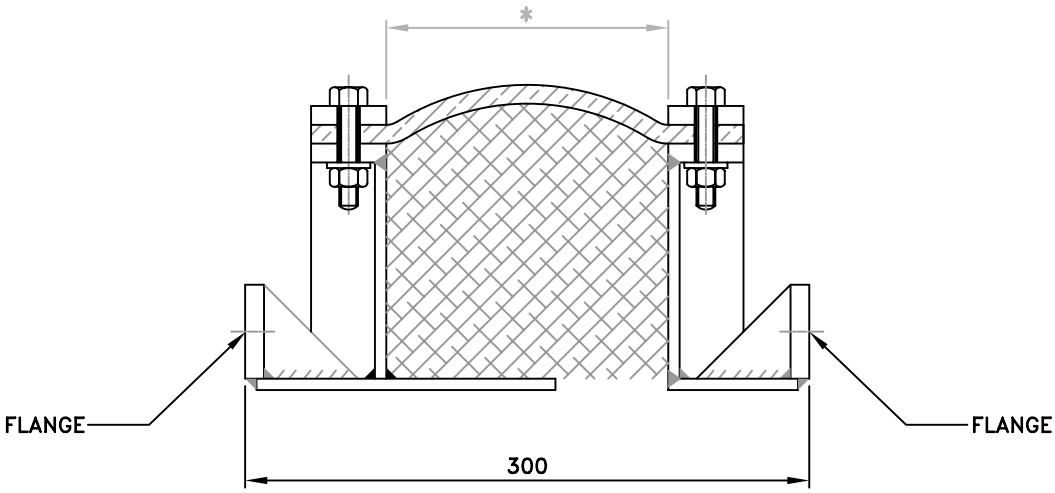


DETAIL – A

FIGURE NO.8 FABRIC EXPANSION BELLOW

## VISITING BOILER PENTHOUSES & BOILER ROOFS

Very few operational & maintenance personnel dare to visit this area. This is because there is always a pool of ash and one may end up in inhaling ash to his lungs. This ash leakage is not intended. But many of the boiler users are unaware that the designer's intention is to give a leak proof penthouse. Due to ignorance of construction workers and due to urgency of commissioning the unit, the seal work remains incomplete. Moreover the sealing work is so cumbersome work, the erection staffs tend to compromise the work. If the work is incomplete, it results in ash leakage & air ingress while the boiler is in service. During a replacement / repair work, seals are ignored and it creates air ingress.

### *THE EFFECTS OF INCOMPLETE SEAL WORK ARE MANY*

1. Ash leaks and makes the boiler house dirty.
2. Air ingress leads to increased oxygen percentage in flue gas. Thus excess air setting would be wrong. This results in poor combustion efficiency.
3. ID fan gets overloaded. At times some users go for ID fan change.
4. In some boilers the combustion is drastically affected. The ID fan provides combustion air near the Super heater area. This can lead to high steam temperature in some cases. The design metal temperature may be exceeded at times.
5. Gas leakage to penthouse can corrode the boiler supporting structure.

Almost 50% of the boilers suffer from this man made disease. The case studies are presented for the benefit of readers.

### *CASE STUDY 1*

See photograph 1 & 2. This was an AFBC boiler with unfinned water wall design. The roof seal work was made of refractory tile followed by castable refractory. The boiler was lignite fired. The complaint in this boiler was the poor combustion efficiency. With air ingress through the cracks in refractory roof, how could any one follow the oxygen? This roof area needed engineering leak proof seal box.

### *CASE STUDY 2*

This was a pulverized coal fired boiler with load carrying oil burners. The visit was made to solve their recurring radiant SH tube failure problem. One of the causes for failure was related to heavy air ingress from roof. This boiler was of loose tangent tube water wall construction. The side wall casings were in good condition. However the roof design was not OK. Photograph 3 shows the condensation of sulfur dioxide in the roof refractory. The unit was oil supported for many years. Recently due to management decisions, the oil support had been cut. The air ingress to penthouse had been quite high that the gas had condensed and damaged the convection SH hanger tubes. It had been corroding the side water wall outlet header & roof beams inside the penthouse. See photograph 4 & 5. The penthouse inspection door was not leak tight. The photograph 6 shows the leaky door. Yet more leakage was seen from the roof floor that was not sealing against air ingress.

The customer had been experiencing the shortage in generation capacity of the boiler. The high air ingress has put restriction on supply of FD air. Hence coal mills were unable to deliver the required coal for the full load.

Another serious problem caused by this air ingress was that partial combustion had been taking place in Super heater zone causing high convection SH steam outlet temperature. The weld joints at

the convection SH header stubs had been failing frequently. These weld joints were of dissimilar material combination of T11 to carbon steel. Since the design steam temperature was only 390 deg C, boiler supplier had given carbon steel tubes & header at outlet of convection SH. In service the steam temperature went as high as 490 deg C. See photograph 7.

***CASE STUDY 3***

This was a bagasse fired boiler. The customer called for improvement of boiler capacity. I found there were several leakage spots downstream the furnace. One major point was that the bagasse particles were found to come out of the furnace roof and burn over the roof. See photograph 8. One can see how difficult it would be to work in the boiler house. Such leakage spots are often created by ignorant maintenance contractors. It remains a fact that we are allergic to engineering drawings. In most cases, sufficient details are given by some manufacturers and documentation is complete.
There are cases, I see that some boiler manufacturers think that it is their trade secret and they do not provide any drawing. A product delivered without technical documentation causes more problems to clients. The customers often rate such companies as incompetent.

***CASE STUDY 4***

A rice husk fired boiler with leaking boiler roof. The water wall roof is finned. But during replacement of SH tubes, the sealing has been ignored. This has led to combustion of rice husk near the convection super heater. The Steam temperature crossed the design values. Photographs 9 & 10 show the air ingress locations. Many times the metallurgy of tubes / pipes adopted may not allow such temperature excursions. Often the super heater suffers localized overheating failures at the locations where small dirt or deposit is present inside the coil.

***CASE STUDY 5***

Photograph 11 is the roof view of a boiler audited by me for availability & efficiency improvement. I often see maintenance team tries to apply cast able work on the roof. Cast able refractory cracks once the heating takes place. I recommend that the final insulation layer is plastered with cement – magnesia mortar mix or Plaster of Paris. This is to be covered by Hessian cloth & painted with shalikote paint finish. This alternative has been able to arrest the leakage with least effort.

***CASE STUDY 6***

This is a recently commissioned 90 TPH AFBC boiler. Customer called me for diagnosis of high LOI in ash. The boiler was shut & offered for my inspection. We can see the incomplete erection work by the manufacturer at the roof. Photo 12 shows the inside view of the convection SH penetrations in roof panel. The fresh air ingress mark is clearly seen. Look at the outside header view in photo 13. The ash marks around the hanger support proves the air ingress. Customer had been trying to maintain the O2 at 3.5% in order to keep the excess air at 20%. With air ingress the oxygen indicated would be wrong. In such a situation, seeing the optimum LOI in fly ash of ESP 1 ash hopper, the air flow has to be adjusted.

***CASE STUDY 7***

This is a 76 TPH boiler AFBC boiler. In this case the shut down audit was performed after three years of operation. Photographs 14, 15 & 16 prove the severe leakage of flue gas from penthouse. The boiler being a pet coke fired boiler the SOx is condensed inside the penthouse and to the structure which is close by.

***WHAT NEEDS TO BE DONE TO PREVENT THE DISEASE?***

The boiler makers however organized they may be at their production shop, there is inconsistent quality workmanship at field. This is due to fact that the field quality audits are not performed. Customer engineers concentrate on project schedule expediting delivery and thus the focus to field quality audit is lost. External inspection companies do not have the product knowledge and thus they miss the intricate points. Consulting companies have the problem of shortage of knowledgeable persons who can go in to the drawing details.

Insisting on design engineer's visit, specifically the person who made / approved the drawing, can help to prevent these mistakes. Auditing the erection by boiler operating engineers can be of help.

During maintenance, things are getting worse for various reasons. The continuity is lost when the people are changing jobs faster. Documentation is not at all available, even if a dedicated engineer gets in to the subject. With short shut down time available, ensuring a good quality would be impossible. But this can be overcome by meticulous planning. During shut down experts can be hired from boiler makers just to look after the quality job. Engineers may be specifically assigned the jobs relieving from regular report making, etc. At many plants, maintenance engineers are content once the job is assigned to a contractor.

Photographic evidence of the completion of jobs can be insisted by the seniors so that they are able to approve the work sitting at their table. Such documented inspection report can help in teaching the new staff. We need to create wealth of information that teaches new staff and makes them equal to an experienced person.

I hope I have convinced my boiler operating friends about the importance of visiting penthouses & roofs. Save your money from leaks.

---

Photo 1- cracks are present in roof refractory work. Castable refractory does not arrest leaks.

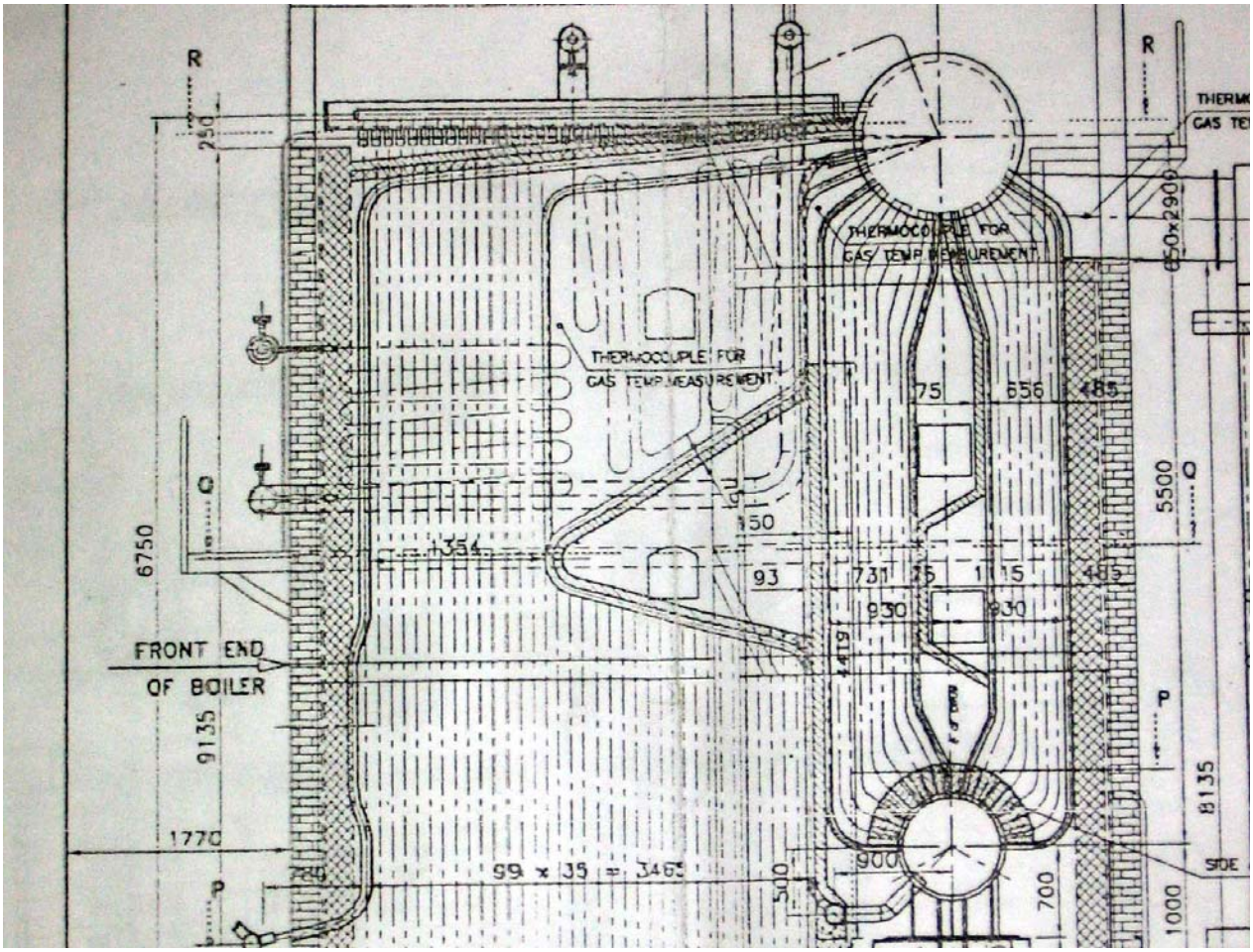


Photo 2: Cross sectional view of boiler

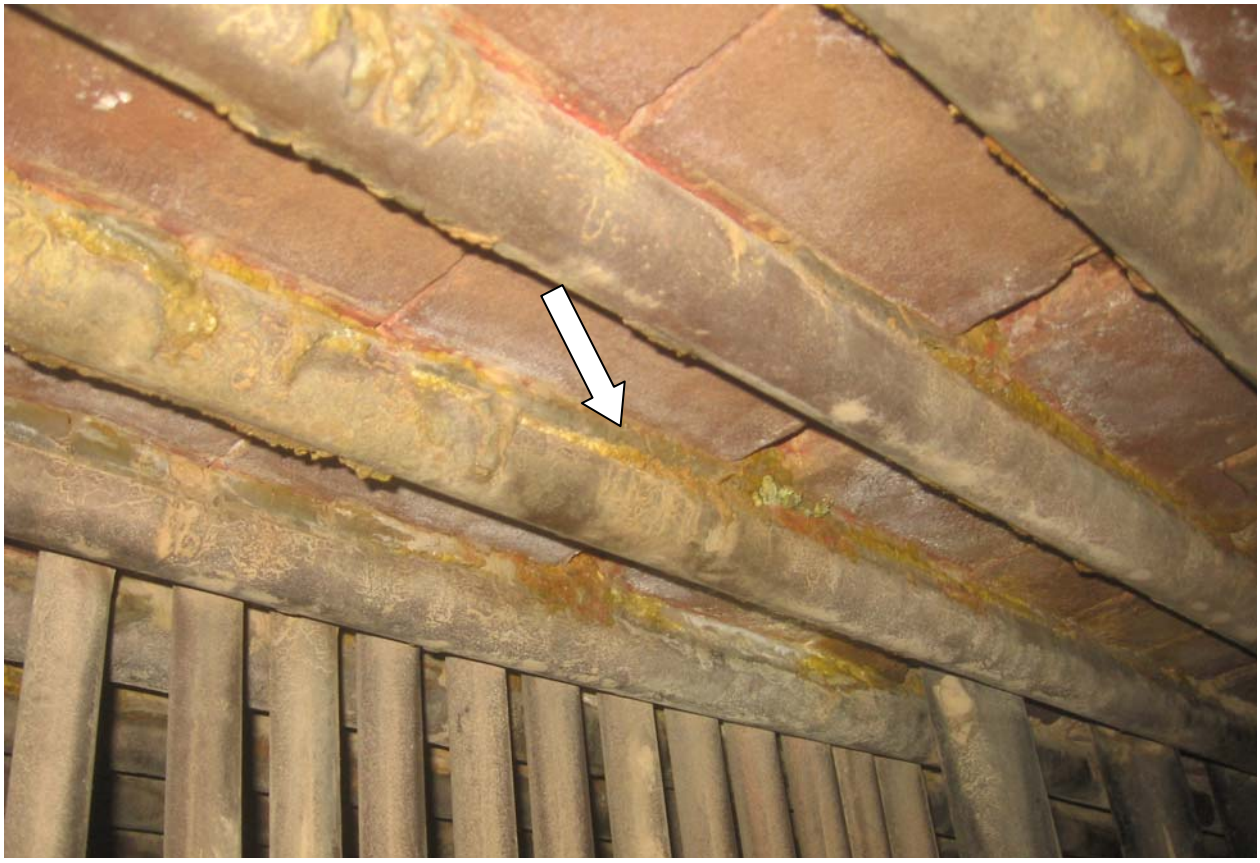

Case study 2- Photo 3- cracks in roof refractory work leading to condensation of sulfur di oxide.

Case study 2: Photo 4: Corroded waterwall header due to condensation of flue gas.

Case study 2: Photo 5- Roof beams under corrosion.

Case study 2: Photo 6: leaky penthouse door.

Case study 2- Photo 7-Failures of weld joint of dissimilar materials caused by high steam temperature.

Case study 3- Photo 8: Fuel & ash leakage in the roof.

Case study 4: Photo 9- Waterwall roof with leakage

Case study 4- Photo 10: leakages around the headers.

Case study 5 -Photo 11- marks of flue gas leakage.

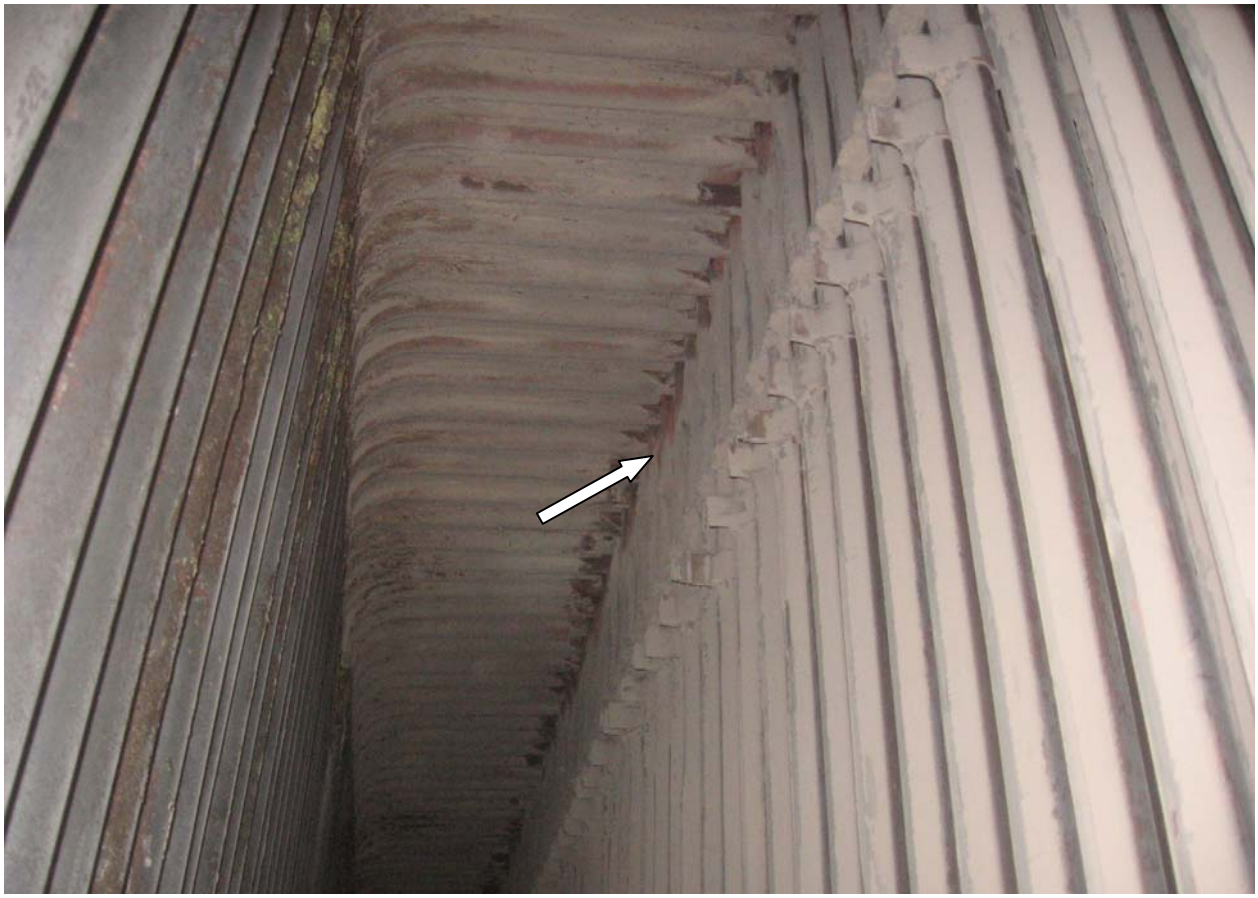

Case study 6-Photo 12: Inside view of SH coil penetrations in the roof shows the air ingress.

Case study 6- Photo 13- Ash leakage marks at SH header area above the roof in a new boiler.

Case study 7 -Photo 14: dust leakage seen around the side cladding sheet below the penthouse.

Case study 7- Photo 15- corrosion seen at roof beams – indication of gas leakage. With high sulfur fuel the corrosion damage will be more.

Case study 7- Photo 16: Flue gas condensation as droplets over the ash is seen. A proof air ingress & ash leak.

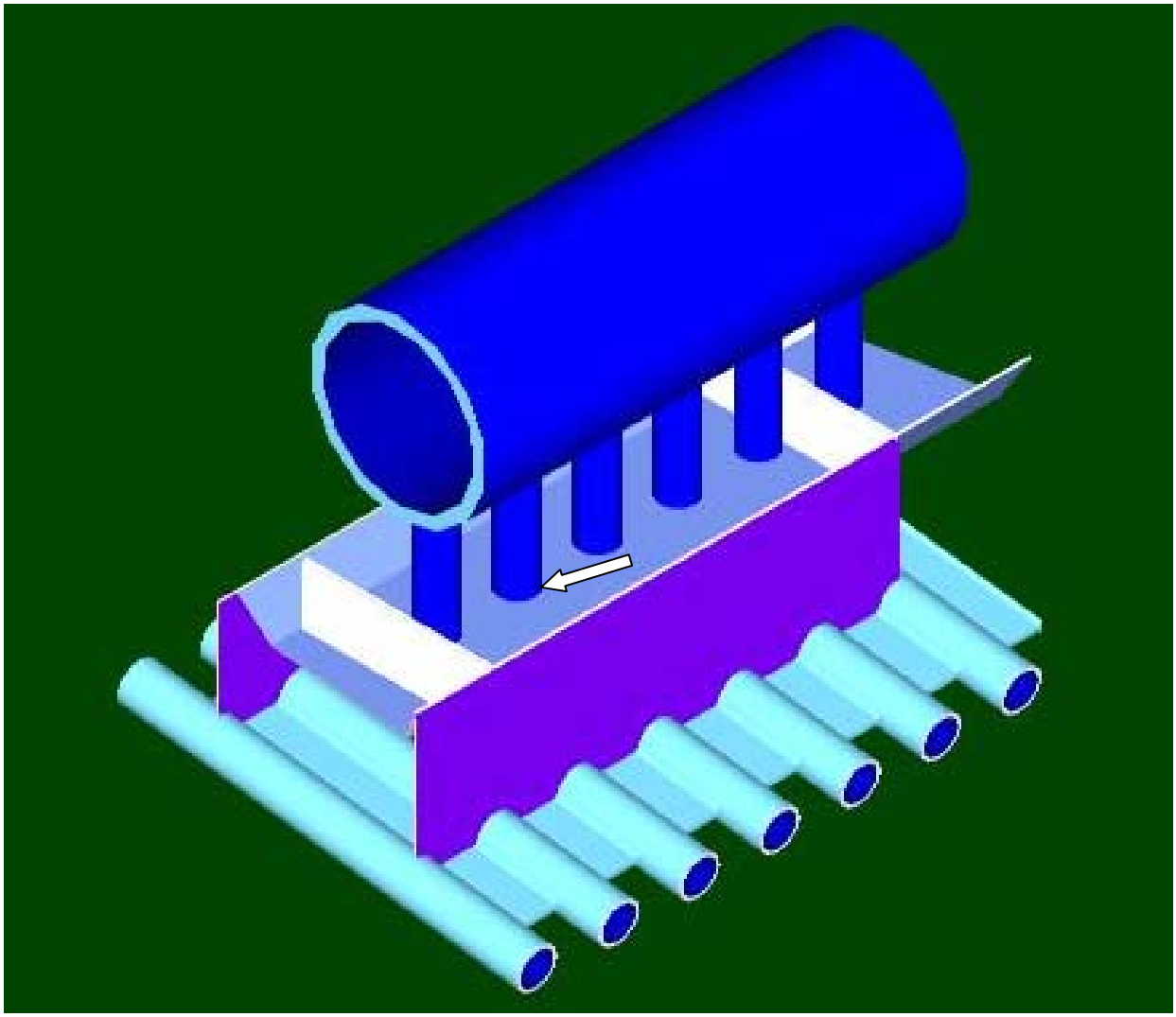

Figure 1: A cross sectional view of roof seal box design followed by boiler manufacturer. What was intended in Computer screen is this. This is a leak proof design taking care of differential thermal expansion between roof panel, SH tubes & the seal box. The arrow shows the location of seal weld which is missed out at site most of the time.

# TROUBLE SHOOTING WATER CARRY OVER IN BOILERS

## *INTRODUCTION*

Carry over is any solid, liquid or vaporous contaminant that leaves a boiler steam drum along with steam. Entrained boiler water contains dissolved or suspended solids, which affects the steam purity. Carryover results from incomplete separation of water from steam- water mixture.

## *EFFECTS OF CARRYOVER*

- Water carry over from steam drum leads to loss of treated water through the steam traps in case of saturated steam boilers. Thus it costs additional fuel.
- However in case of boilers with superheater, the carryover will be indicated by the drop in main steam temperature.
- The carryover leads to deposition of solids in SH coils and turbine blades. It affects equipment availability.
- Carryover affects product quality in food & pharmaceutical industries.

## *CASE STUDIES*

It may be appropriate to deal first some cases wherein the carryover had been a concern and the way they were solved.

## *CASE STUDY 1*

The customer has a chemical factory situated at Tamilnadu. He reported that the water carryover is enormous and there has been a large quantity of water flowing from the steam traps in the main steam line. The boiler is a 10 TPH B&W inclined bank tube boiler shifted from a different location and converted to FBC firing. The customer has experienced carry over ever since the boiler was restarted. He complained to the boiler manufacturer who got a reply that they had not done any modification inside the drum. The service engineer who had visited could not resolve the problem.

When I visited the plant the customer had given a brief shut down of the boiler. The steam drum was opened and inspected. The cause for carry over was too simple a reason. The feed distributor pipe was not erected. The feed water inlet pipe bend was facing upwards towards the steam separator pipe.

The cause for carryover here is faulty erection of steam drum internals.

## *CASE STUDY 2*

The customer has a rice mill industry at Andhrapradesh. The customer had complained that he had been replacing SH tubes in the boiler every year. The failed tubes were seen with heavy deposits. The reason for this was clearly carryover. Now I went on to check the reasons.

- DM plant was located in a dusty area, where there were high chances for fouling of resin beds and carryover of suspended solids.
- The Feedwater storage tank manhole door was open giving the possibility of forwarding dust from mill into the boiler.

- There was no suction filter for the boiler feed pumps. Thus impurities would enter the boiler unnoticed.
- There was no deaerator provided for this boiler. There were chances for iron oxides transportation from feed water tank itself.
- There was no pH booster arrangement to improve the feed water pH. There were chances of metal loss from the pipes and contaminating the feedwater.
- There were frequent boiler stoppages during which time no preservation procedures were followed.
- The feedwater flow was not regulated. The feed pump was being operated on /off.

There were enough number of reasons for carry over and thus deposition inside SH tubes was the net result.

***CASE STUDY 3***

This boiler user from Tamilnadu is a well-known tyre manufacturer. The customer called for an annual inspection visit. During the visit the boiler operators explained about the drum water level fluctuation in the steam drum. They experienced erratic variation in drum level, though the plant runs fairly at a constant load. The boiler is of bi drum configuration producing saturated steam. The steam traps in the plant were all connected in closed circuit. All the traps exhaust are connected to the blow down tank from where the water is pumped back to boiler through the Ogden pump. There was no way one could suspect the carry over.

On inspection of DM water storage tank, I found severe corrosion inside tank. The tank was unlined and made of carbon steel. The pH of water stored in this tank was 6.5 to 7. Clearly there was high possibility of corroded metal being transported to boiler.

There had been a huge loss of heat energy when the water from drum is transported to Blow down tank without consuming the energy in the plant. The gain in DM water and fuel has been remarkable.

Cases like this are really found to be many. Boiler sellers do not seem to offer such services to ensure the water quality would be assured after the plant is put into operation. It is true consultants like me get our bread from such boilermakers.

***CASE STUDY 4***

This Boiler user from Andhrapradesh is a big chemical Industry. Recently a second hand John Thomson boiler was bought and converted to higher capacity by a boiler repairer. The repairer had ignored the importance off the steam drum internals. When the steam generation rate is increased it is necessary to ensure the right type Steam driers are put. The client was interested in an audit of the boiler after erection by me. I recommended for changing of driers for ensuring steam quality. Customer had postponed the decision until the unit was stabilized. After stabilizing the unit the steam temperature remained lower to rated temperature by 20 deg C.

AS per my recommendations, the customer had now procured the driers and installed. To his surprise the SH outlet temperature now went up. There was an improvement of 40 deg C just after changing the driers. This implies there had been carry over of water from the boiler. There was a huge pay back of the expenses incurred in attending the drum internals. As the steam temperature turbine specific steam consumption came down and thus the savings.

### *CASE STUDY 5*

This Boiler user at Orissa is a Chemical plant making sulfuric acid. The Boiler system has a waste heat boiler, two Superheater stages and an economiser, which form part of sulfuric acid plant. The various heating surfaces are designed to maintain the process temperatures for the necessary chemical reactions to take place. The customer reported that the gas temperatures after SH stage was too low. The plant supplier who visited the plant advised to check water carryover from the steam drum. The boiler vendor deputed me to solve the problem. The water chemistry data for last one month was checked. It was clear there had been a serious deviation in water chemistry. The boiler water pH had been at 6.5 to 7 for a period of 10 days prior to this incident. The boiler TDS was double that of recommended value. The phosphate concentration in boiler water had exceeded the recommended value. I suspected that the boiler water is contaminated with corrosion product that was generated within the boiler itself. I recommended the boiler water is replaced completely. The boiler was blown down from the lowest points and the next day the SH temperature got restored. The process temperatures reached the requirement.

### *FACTORS THAT AFFECT THE CARRYOVER*

- Operating pressure
- Water level in steam drum
- Load characteristics
- Drum size
- Drum internal geometry
- Condition of drum internals
- Feed water chemistry
- Boiler water chemistry
- High drum level operation
- Improper water treatment
- Blow down practice
- Offline preservation

Influence of each factor is elaborated below.

### *OPERATING PRESSURE*

Operating the boiler at significantly below the design pressure is a cause for carryover. Lower the steam pressure more the steam specific volume. Hence the steam velocity in drum internals would now be more. The separation of water droplets from the driers would not be good.

### *LOAD CHARACTERISTICS*

Fluctuating loads lead to sudden withdrawal of steam. Hence the velocity in the drier zone will be more and hence the water droplets get carried over to the steam before they fall out from the steam. In addition when the load demand is larger, the drum pressure will be lowered and this causes a momentary raise in water level, called priming. At this time, the carryover of water will be more.

### *DRUM SIZE*

This factor is by design. Three-element drum level control had made it possible to design smaller diameter drums. The drum internals include baffle plates, cyclone type separators, Chevron separators or screen driers, perforated boxes. The drum diameter should be selected so that the distance from water-steam interface to driers is quite adequate. Failure to address this would result in carryover.

### *DRUM INTERNAL GEOMETRY*

There is no single standard method to arrange the drum internals. The boiler configuration calls for extensive variation of drum internal arrangement between boilermakers and even within the product range of single manufacturer. Figures show several internals arrangement followed / encountered by me.

Improper internals arrangement is a major cause for carryover. There is always good scope for improving the steam quality by critically reviewing the present arrangements. Drum internal design should aim at fulfilling the following criteria.

- Reducing the turbulence created by the risers & downcomers by adopting baffles.
- Creating a tortuous path for steam before it enters drier section.
- Provide adequate drier section to trap water droplets and drain off without allowing re-entrainment into the steam.
- Maximize the distance between the water-steam interface and the driers.
- Distribute the chemicals over the entire drum length
- Extract the blow down water across the entire drum length
- Distribute the feed water without creating turbulence

Low-pressure boilers, generally, the fire tube boilers are provided with dry pipes at steam pipe inlet. High-pressure boilers are to be provided with multi stage separators such as cyclones, chevron separators. Some boilermakers use demisters with higher drum sizes.

### *CONDITION OF DRUM INTERNALS*

Whatever be the proper engineering & supply made by the boiler vendor, it is possible that things go wrong in erection at site. Even in operating boilers, the drum internals get disturbed during maintenance. The drum internals fail due to corrosion in service due to poor water chemistry or improper boiler storage at idle times. Regular check by the manufacturer or competent boiler consultant would be worth.

### *FEEDWATER CHEMISTRY*

The chemistry of feedwater should meet certain minimum requirements laid out by the boilermakers. The feedwater if contains oil or organic matter, the same leads to foaming. The carryover of solids is very high.

If the feedwater has dissolved iron, which may be either from condensate or from the make up water or generated within the boiler will again lead to foaming.

If the feedwater contains suspended impurities then also carry over will be high. Dissolved oxygen in feedwater leads to corrosion of economiser and this leads to generation of iron oxide, which again leads to increased suspended iron in the boiler water.

***BOILER WATER CHEMISTRY***

The chemistry of Boiler water should meet certain minimum requirements laid out by the boilermakers. The boiler water if contains high TDS the carryover of solids will be more. Since the efficiency of separator which is fixed, the only way to bring carryover is to bring down the Boiler water TDS. In boiler water, the presence of free NaOH must be eliminated by practising coordinated phosphate control. High alkalinity and presence of suspended impurities increase carryover.

When the suspended impurities are more, there is a blanket formation over the water-steam interface and this prevents the easy passage of steam bubbles from the boiler water. The steam bubbles out of the skin formed by the impurities throwing the suspended impurities to the steam driers.

The silica in boiler water is to be controlled more stringently based on pressures. Silica carryover is more at pressures above 28kg/cm2.

***HIGH DRUM LEVEL OPERATION***

The operating level, alarm levels & trip levels such as NWL, Low water level, very low water level, High water levels are decided by the boilermaker. At site conditions the levels are to be clearly marked and set by competent persons. While the low levels affect the circulation, the high level affects steam purity. The carryover is more with high water level. Lowering the NWL settings should be examined ensuring that roof tubes are within the water level. In many cases, Boiler users have reduced the carryover in the boiler simply by altering the NWL settings and by tuning the control valve action.

On off operation of boiler feed pumps a cause for carryover in flue tube boiler. It can be practiced only when the drum size is big as in an oil-fired boiler with internal furnace. In external furnace cases, the steam space is less, thus feed water regulation would give purer steam.

***IMPROPER CHEMICAL DOSAGE***

A good water treatment is important for water controlling carryover. Excess chemical dosage leads to upset in boiler water chemistry. Antifoam agents are used to control the carryover. Use of sludge conditioners also help in preventing carryover besides preventing deposits.

***BLOW DOWN PRACTICE***

Continuous blow down is the best way to maintain a constant boiler water quality. Blow down at lowest points of the boiler must be done at every opportunity without affecting the circulation in boiler.

### *OFFLINE PRESERVATION*

Improper offline preservation leads to iron oxide generation in boiler water and this leads to carryover during boiler restarting.

### *CONCLUSION*

Equipment availability is greatly affected by the carryover, though it appears to be a simple matter. It is hoped that the readers are benefited out of this article. Take care to inspect the drum internals in the next shut. There are many users who do not open the steam drum manhole even during annual maintenance. Please be benefited by a thorough shut down inspection of drum internals.

---

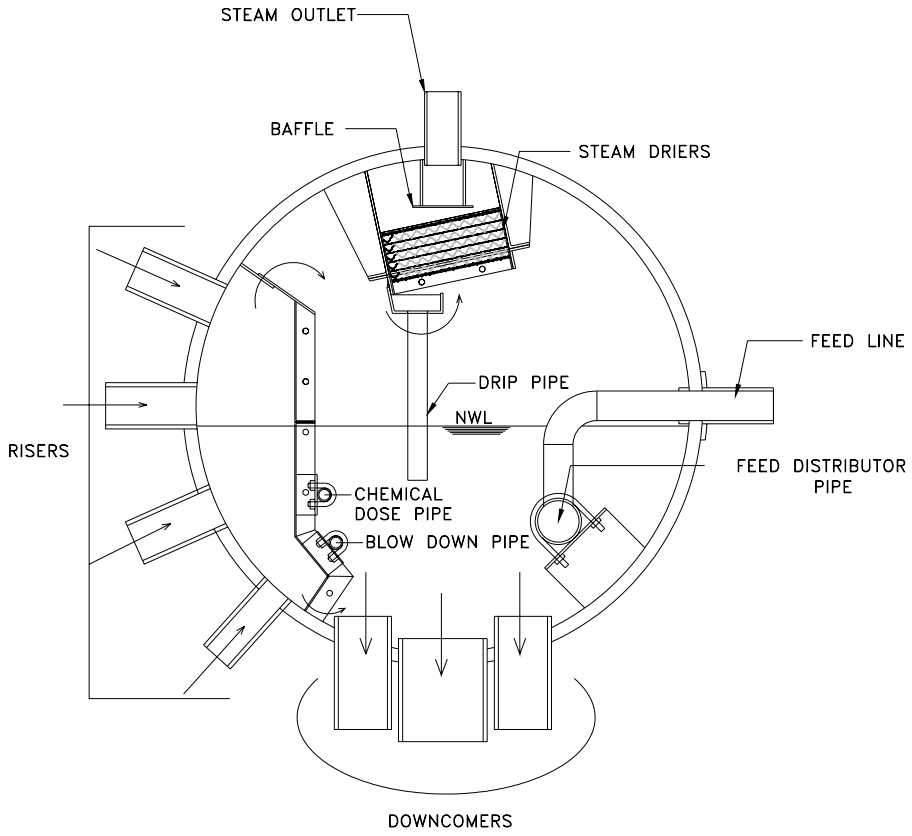


STEAM DRUM INTERNAL ARRANGEMENT

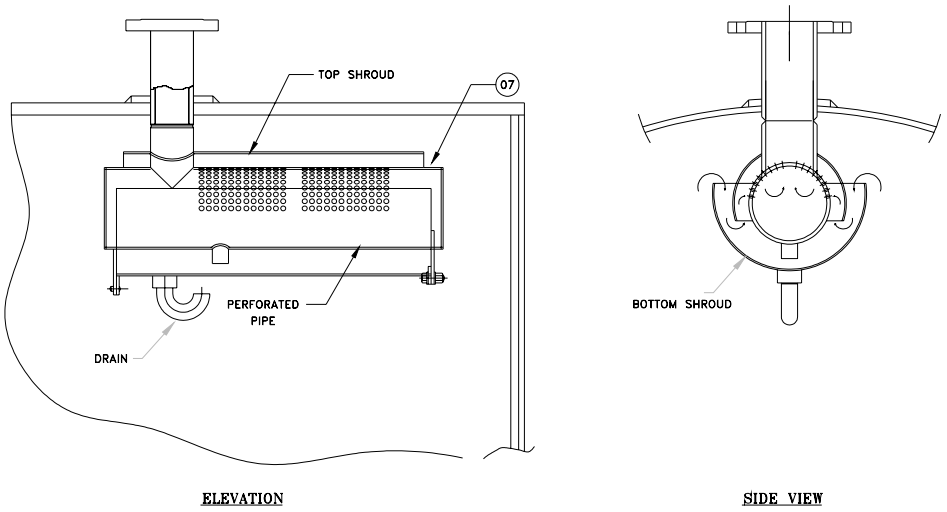


STEAM DRIER ARRANGEMENT IN SHELL TYPE BOILER

# CAUSTIC GOUGING IN BED TUBES OF HIGH PRESSURE AFBC BOILERS

## *SYNOPSIS*

This article is about water side corrosion due to a mistake in design of boiler. Corrosion in the boiler is prevented by maintaining a boiler water condition in such a way that the magnetite layer is retained. Boiler water has to be at a pH of 9 to 10.2 in order to preserve the magnetite layer of steel. This is done by dosing sodium phosphate in boiler water through HP dosing system. In case there is a mechanism of concentration of the alkalinity of boiler water anywhere in the evaporative circuit, caustic gouging / caustic attack occur. This is what happened in the some of the high pressure AFBC installations that came up in the last year.

## *A RECALL OF THE PAST*

I had come across the first failure in the year 1990 in 30 TPH AFBC boiler. The bed evaporator tubes failed in $4^{th}$ compartment within six months after the boiler was commissioned. I happened to analyze the failure cause at that time. I had seen gross deviations in water chemistry. The alkalinity level was very high and there was clear indication of free OH presence in boiler water. Since the load on the boiler was less, the $4^{th}$ compartment was always kept under shut down. Circulation is a function of heat flux in the evaporator tube. When the heat input is less the steam generation is less. The velocity of the water in such tubes is expected to be too low, resulting in film boiling. Film boiling would lead to concentration of boiler water. The local water alkalinity could reach very high level thus resulting in break down of magnetite layer. The iron gets dissolved as Fe(OH)2. The failed tubes had a groove mark as shown in photo 1. The leakage develops through a pin hole in the groove portion where the material is continuously removed by the caustic action.

## *IN THIS YEAR*

In the recent past 12 months, I came across the same failure in several FBC boilers which were designed for high pressure. In AFBC Boilers the heat flux is the highest in bed evaporator tubes. It is in the order of 390 to 400 kW/m2 expressed on tube inside area basis. As the pressure of the boiler goes to 88 kg/cm2 & above, the circulation ratio comes down. This could be 8 to 10 depending the circulation system design. The flow through the bed tubes may not be a fully mixed flow. It is a subject of flow pattern inside tubes, when the steam fraction increases in the boiler tubes.

## *FLOW PATTERNS*

Steam and water have different densities at different pressure. At the critical pressure, the water and steam have practically the same density. At the lower circulation ratios, the steam and water can exist in several flow patterns inside the tubes. Flow pattern means distribution of the steam with respect to water. The important physical parameters which determine the flow pattern are

- Surface tension – which keep the pipe always wet and which tends to make small water droplets and less diameter spherical steam bubbles.
- Gravity – which tends to pull the water to bottom of pipe and push the steam to the top of pipe – specifically in inclined tube.

There are various patterns of flow that exist inside tubes. The patterns are defined with respect to orientation of tubes.

## *FLOW PATTERN IN VERTICALLY ORIENTED TUBE*

The common flow patterns for vertical upward flow, which is when the boiler tube is oriented vertical, are as shown in figure 1. As the quality, that is steam to water ratio increases, the flow patterns change from bubbly to wispy annular flow. In the boiler the steam / water ratio that is prevailing in the particular circuit along with the mass flux would have decided the flow pattern inside tube. Undoubtedly, the flow has to be bubbly flow so that the water / steam flow well mixed inside tube without any steam blanketing inside the tube. Otherwise the metal temperature would go up resulting in tube bursts.

- Bubbly flow: the steam / water bubbles are uniform in size.
- Slug / Plug flow: the steam flows as large bullet shaped bubble. Also the steam bubbles prevail as small bubbles in water. This flow pattern is also called plug flow.
- Churn flow: Highly unstable flow of oscillatory in nature. The water near the tube walls continuously pulses up and down.
- Annular flow: The liquid travels partly as annular film on the walls of the tube and partly as small drops distributed in the steam which flows in the centre of the tubes.
- Wispy- annular flow: As the water flow rate is increased in annular flow, the concentration of drops in the steam core increases. Ultimately the droplet concentration in the core leads to large lumps or streaks / wisps of water in the steam core. The flow pattern is the characteristic of high mass flux.

## FLOW PATTERN IN HORIZONTALLY ORIENTED TUBE

The phases tend to separate due to density difference causing a form of stratified flow to be very common. This makes the heavier water phase to accumulate at the bottom of tube. When the tube is inclined at an angle the pattern the slug / plug flow is common. The common flow patterns in horizontal tubes are illustrated in figure 2.

Flow patterns vary from that of vertical tubes due to gravitational forces which act perpendicular to the direction of flow. As the steam fraction increases, the flow pattern changes from Plug to annular flow.

- Plug flow: The individual steam bubbles have coalesced to produce long plugs. The steam bubbles tend to flow along the top of the tube.
- Stratified flow: the steam to water interface is smooth.
- Wavy flow: the stratified flow may not remain smooth for long as the steam fraction increases, the flow becomes wavy.
- Slug flow: the wave amplitude is so large that the wave touches the top of the tube.
- Dispersed bubble flow: many small steam bubbles are distributed uniformly across the entire tube cross section when the steam and water velocities are high.

Figure 3 is the very well known representation of the steam bubble behavior inside a horizontally oriented tube. It is the designer’s job to design the evaporation circuit with proper downcomer and riser arrangements, evaporator tube arrangements to ensure the nucleate boiling prevails in each part of the boiling circuit.

### *WHAT CAN HAPPEN INSIDE THE BED TUBE UNDER VERY LESS HEAT INPUT?*

When the velocity inside the tube is less, the steam bubble may rise to the top and form a bubble adhering to tube wall at $12^o$ clock position. In vertically oriented tube the steam bubble would get in to the water phase. As the steam bubble sticks to the top, the water begins to concentrate in alkalinity. The tubes may not fail due to steam blanketing because the gas side temperature may be low. But corrosion mechanism begins and results in a gouged tube as seen in photo 2.

### *WHAT CAN HAPPEN INSIDE BED TUBE UNDER SITUATION OF HIGH HEAT INPUT, HORIZONTAL / LOW SLOPED ORIENTATION / LESS VELOCITY?*

High heat input would help in forming more steam bubbles to facilitate the growth of the bubble. As the bubble size increases, it would raise to the top of the tube in the absence of sufficient horizontal velocity or when the tube is horizontal or inclined to very low angle. Now the steam forms a blanket inside the tube, may be for a moment, before being washed away by water.

### *SO WHAT IF THE STEAM BLANKETS THE TUBE*

When the blanket is heavy and in the absence of horizontal velocity component, the steam would get superheated and tube would have failed due to high metal temperature. The failure would have been instantaneous. This is called dry out and the heat flux is called critical heat flux.

When there is a horizontal velocity component the steam bubbles and water wetting alternately take place at the top of the tube. This is described as slug flow / intermittent flow. Now we have a mechanism of local concentration of solids due to evaporative boiling. The water going along the top of the tubes has a different velocity as compared to the stream of water going along bottom of tubes. This boiler water sample, upon which the control is based, represents an average of all the water within the boiler and as such it contains water subjected to both the most severe and the least severe conditions within the boiler. Hence water chemistry except for presence of corroded iron at drum internals, does not indicate concentration of solids / chemicals inside the low sloped bed tubes. The low slope tubes may prevent adequate mixing with the bulk liquid phase and over time, a concentration gradient will develop between the bulk boiler water and the localized solution in contact with the magnetite surface. Localized concentrations for some species may be two or more orders of magnitude higher than in the bulk boiler water (Cohen et al., 1962). Under these conditions, species, such as NaOH and NaCl, with relatively high solubilities tend to stay in solution, while those of more limited solubility, such as those incorporating phosphate species, may exceed their solubility limits, and undergo precipitation. In general wherever the tubes had failed due to gouging, the analysis indicated phosphate salts.

### *APPEARANCES OF FAILED BED TUBES*

The gouging type failures (as in photo 1) have been seen in at least six installations where the slope of the bed tube happened to be less than 5 deg. The steam to water fraction happened to be higher and the overall circulation ratio was estimated as 8-12. Depending upon the water outlet temperature at economiser, the water inside the bed tubes begin to boil at a distance from the wall. The gouging mark was seen inside the tube after the steaming point. At one unit where the economiser outlet water temperature was very less, the gouging was seen in the upper portion of hairpin bed coil.

### *WHAT NEEDS TO BE DONE TO DELAY THE FAILURE?*

When it happened, the immediate concern was to how to keep the boiler on line before any remedial measures could be taken.

1. Operating at lower loads / lower pressure will lead to delayed failure. This is mainly due to the reason that the steam to water ratio is more at rated load & rated pressure.
2. Operation of the boiler within narrow range of phosphate offers a time delay against unavoidable failure.

### *WHAT IS TO BE DONE TO PREVENT THE FAILURES IN FUTURE?*

When it was zeroed down that the angle of slope of the bed coil was the prime cause for failure, the next question was how to rectify the design defect.

1. To prevent failure the slope of the tube has to be raised. In many cases the increase in angle would have resulted in less bed HTA. Alternate configurations have to be thought of to avoid lower slopes. While replacement of bed tubes increased slopes shall be considered. This conclusion was based on one boiler operating with 10 deg slope at 110 kg/cm2 pressure.
2. The circulation ratio can be improved by adopting better designed downcomer riser layout. We can not adopt a common downcomer system for two circuits which have different heat flux. This mistake is seen in some units: the downcomer is common for water walls that were having less steaming rates. In such circuits there will be poor flow rates. This also reduces the mass flow rate in bed tubes depending upon how the branching is done.
3. Rifle bore / internally ribbed tubes are to be used to enhance mixing of steam and water. In the installations where the tubes had already failed this was the only solution. Rifle bore tubes have spiral ribs which impart swirling motion to steam-water mixture flowing through the tubes. The mixing of steam & water ensures the constituents of water inside the tube are the same as that of bulk water. Rifle bore / internally ribbed tubes are being used in once-through boilers. In future for 88 kg/cm2 and beyond, rifle bore tubes are to be used.

### *A REVIEW OF CAUSTIC GOUGING MECHANISMS*

Caustic gouging is a form of corrosion of steel. It generally results from fouled heating surface and the active corrodent (sodium hydroxide) in the boiler water. Concentrated solutions of alkali occur in situations where the normal water washing of tube metal is restricted after the steam bubble release. The concentrations of corrosive solutions occur at the heat transfer surfaces as the result of fouling by porous deposits such as iron and copper oxides. These deposits are typically formed from particles suspended in boiler water. Once the corrosive concentration mechanism is started, the additional corrosion products are generated from porous deposits. Boiling under the deposits is often referred as Wick boiling. Boiler water permeates the porous deposit by capillary action through small pores like a liquid permeating a wick. Steam then escapes through the larger pores (channels) leaving non volatile solutes behind. These new deposits then concentrate beneath deposits.

Feedwater solids concentrate in the boiler relative to blow down rates. Boiler water solids may concentrate an additional 2000 times at the heat transfer surface as a result of a concentrating film produced from non boiling equilibrium. The formation of a steam bubble further concentrates boiler solids. These conditions are most likely reached in the presence of porous deposit.

Once the local caustic concentrations are reached such that caustic attack occurs, the corrosion can proceed to failure in a very short time. Caustic corrosion is an irregular thinning or gouging of the tube water side surface. Areas subject to caustic attack typically show smooth round rolling contours surrounded by encrusted boiler water solids and crystalline dense oxides. The oxides however are not protective. Particles of metallic copper may also be embedded in the deposit layer.

Failures due to caustic attack are caused by metal loss. The damage progresses to failure when the tube wall thins to a point where rupture occurs locally. The microstructure does not change and the tube metal retains ductility.

Caustic attack can also lead to other type of failures. One form is the hydrogen damage which results from hydrogen liberated in the corrosion process diffusing in to the metal. The hydrogen can then react with iron carbides in the metal to produce methane which develops pressure leading to the formation of inter-crystalline cracks. Stress corrosion cracking can also occur due to hydrogen diffusion along the grain boundaries.

**DETAILED CORROSION MECHANISM**
**FORMATION OF MAGNETITE LAYER**

The control of corrosion in boiler environment is based on maintaining conditions which enhance passive film formation. Magnetite, $Fe_3O_4$ is the preferred high temperature iron oxide form. Well crystallized (unhydrated) magnetite forms a dense layer resulting in excellent passivation. The formation of magnetite takes place as shown below.

$Fe^{2+}$ Ferrous ion
$Fe^{3+}$ Ferric Ion

$FeO$ Ferrous oxide – Iron II oxide
$Fe_2O_3$ Ferric oxide – Iron III oxide
$Fe_3O_4$ Ferrous ferric oxide – Iron II, III oxide

$FeOH_2$ Iron II hydroxide
$FeO(OH)$ Iron II oxide hydroxide
$Fe(OH)_3$ Iron III hydroxide

(Reaction -1) $Fe + 2H_2O \leftrightarrow Fe^{+2} + 2OH^- + H_2$

(Reaction -2) $Fe^{+2} + 2OH^- \leftrightarrow Fe(OH)_2$

(Reaction -3) $3Fe(OH)_2 \leftrightarrow Fe_3O_4 + 2H_2O + H_2$

It is seen from reaction 2, that the hydroxyl ions are to help in continuous formation of $Fe(OH)_2$ – that is soluble iron II oxide. $Fe_3O_4$ forms over the inner surface of tube offering a continuous protection. On the whole it is a passivation process is basically due to an active surface of Fe being corroded to a relatively inactive state of $Fe_3O_4$.

Under good operating condition, the oxidation of iron to magnetite at the metal surface is slow because the magnetite forms a fine, tight adherent layer with good protective properties. The film generally displays good adhesive strength in part because thermal coefficients of liner expansion for magnetite and layer are very similar. Therefore varying heat load and surface temperature do not cause undue stress between the film and the underlying metal surface.

***DETERIORATION OF MAGNETITE LAYER IN HIGHLY ALKALINE ENVIRONMENT***

Magnetite is considered to be a co polymer of the iron (II) hydroxide –FeO and iron (III) oxide – Fe2O3. In this system the bonds of divalent iron are more easily hydrolyzed. That is FeO can

become FeO.OH by the following equation. The iron (II) hydroxide system (aqueous) is considered to be in solution equilibrium with magnetite as follows.

(Reaction -4) - $Fe_3O_4 + 2H_2O \leftrightarrow Fe(OH)_2 + 2FeO.OH$

The solubility of magnetite layer in highly alkaline atmosphere ($OH^-$) is explained as below. Under highly alkaline conditions the ferrous hydroxide in solution may react as follows.

(Reaction -5) - $Fe(OH)_2 + OH^- \leftrightarrow Fe(OH)_3 \leftrightarrow HFeO_2 + 2H_2O$

(Reaction -6) - $Fe(OH)_2 + 2OH^- \leftrightarrow Fe(OH)_4 \leftrightarrow FeO_2^{-2} + 2H_2O$

Caustic attack occurs in this manner through activation of the carbon steel surface by removal of passive oxide layer inhibiting its formation. These conditions lead to the formation of a velvet black, finely crystalline, reactive magnetite. It has low adherence and practically no protective effect.
As a result the magnetite layer is dissolved in the form soluble ferrate ions as the equilibrium in reaction 4 is driven to the right via removal of ferrous oxide. In addition further formation of magnetite layer is inhibited as the equilibrium in reaction 2 is driven to favor soluble ferrate ion formation instead of magnetite as illustrated in reaction 3.

The distortion of equilibrium illustrated in reactions 2 and 4 following the reactions 5 and 6 requires the presence of very high concentration of hydroxyl ions. Concentration of hydroxyl ions can be found at boiler heating surfaces where normal washing of surfaces by boiler water is restricted due to either presence of deposits or the development of a film of superheated steam at the surface of tube.

***CONCLUSION***

To summarize, steam blanketing can also lead to caustic gouging. This occurs when stratification of the steam water mixture produces high concentration of caustic. Steam blanketing can occur when the fluid velocity is insufficient to maintain turbulence and produce phase mixing. Steam blanketing can also occur in low sloped tubes where the heat flux is high.

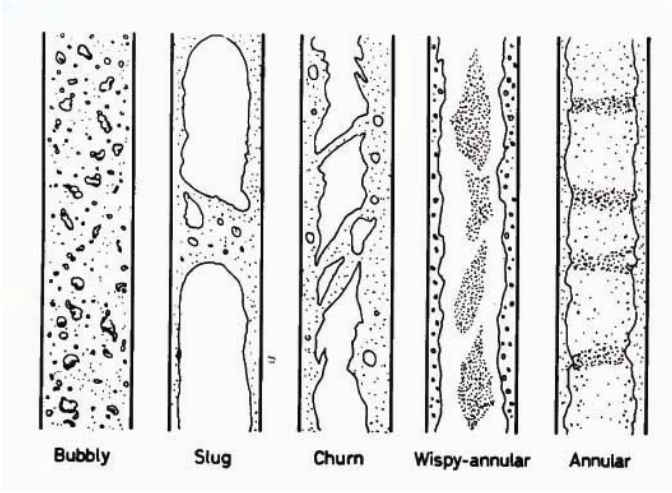


Figure 1: flow patterns in vertical oriented tube.

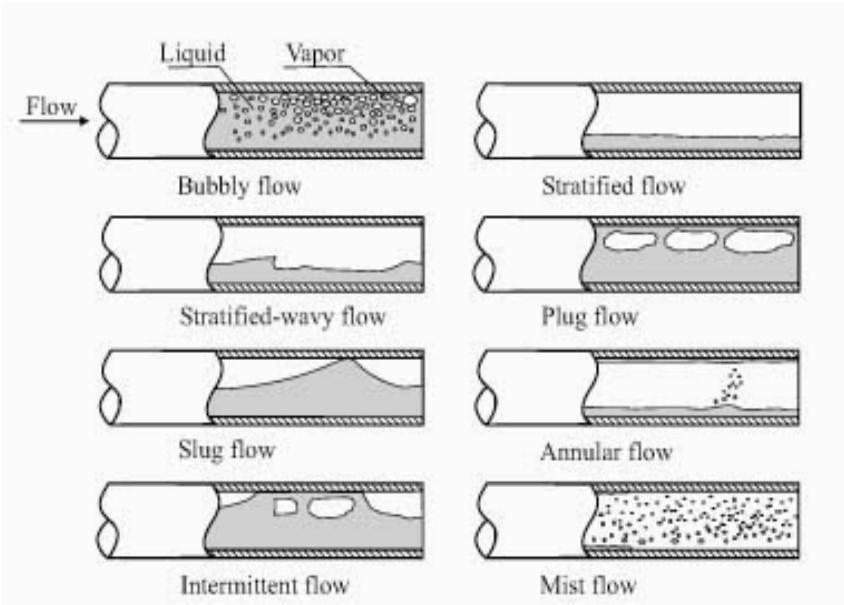


Figure 2. Flow patterns in horizontal tubes.

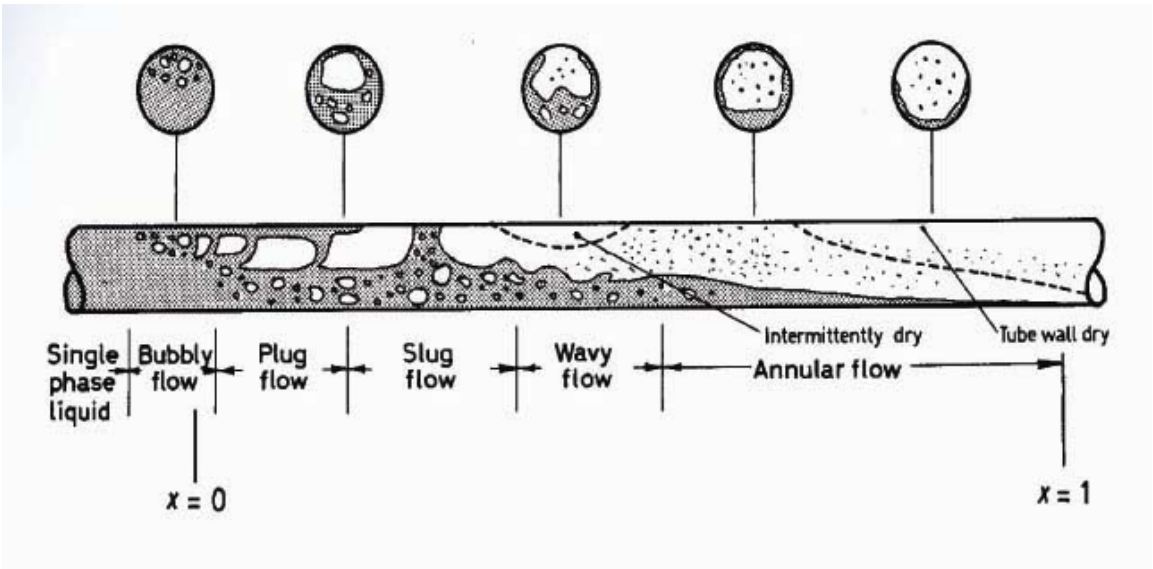


Figure 3. Boiling phenomenon in horizontal tubes for various steam fraction.

Photo 1- shows the deposition of chemical at top portion of bed tube.

Photo 2- shows the material loss at top portion of bed tube.

Photo 3- shows the internally ribbed tube / also known as rifle bore tube.

# AGRO FUELS & BOILER AVAILABILITY

The use of Agro fuels for steam generation is increasing day by day. Some agro fuels are waste products after we recover the useful grains / oil. Some agro fuels are biomass such as firewood which has no other use except for steam generation. Some times it could be a byproduct fuel such as plywood waste or saw dust. Many of the boiler users have had the bitter experience with firing agro fuels as it reduced boiler availability. In this paper, the fuel characteristics are discussed. The care to be taken for boiler design / operation is discussed. Measures to be taken to increase the boiler availability / efficiency are discussed.

Following Are The Partial List Of Agro Fuels Used In Boilers.

Fire wood, Saw dust, Coffee husk, Cashew shell, Palm bunch, Wood shavings, De oiled bran, Rice husk, Wheat straw, Cotton stalk, corn cobs, Coconut shell, Bagasse, Eucalyptus leaves, Groundnut shell, Cane trash, Bamboo dust, Julia flora and Coconut coir pith are some of the fuels

## *CHOICE OF COMBUSTION TECHNOLOGY*

The choice of combustion technologies had been based on several factors, major of which is the seasonal availability of fuels. Other criteria had always been the steaming capacity of the boiler and the process application. Power production does not tolerate pressure swings due to inconsistent fuel quality. Some plants required constant steam pressure for the process.

| **Available combustion technologies – use of fuels** | | |
|---|---|---|
| Hand firing on fixed grate | - | Used for firewood, plywood waste |
| Hand firing on dumping grate | - | For fibrous fuel where air can diffuse easily even if the fuel is dumped. -Used for bagasse & saw dust firing. |
| Dumped firing on horse shoe furnace | - | only for bagasse firing since fuel is fibrous |
| Suspension firing on fixed grate | - | Bagasse, saw dust |
| Suspension firing on dumping grate | - | Bagasse, saw dust |
| Suspension firing on traveling grate | - | Rice husk, bagasse, sawdust, GN shell |
| Mass firing on a traveling grate | - | Odd sized fuels |
| Over-bed firing in Fluidized bed combustor- open bottom | - | Rice husk, GN shell, Coffee husk, wood chips |
| Under-bed firing in fluidized bed combustor | - | Rice husk, GN shell |
| Circulating fluidized bed combustor | - | Ideal for rice husk, sized fuels with ash fusion temperature above 900 deg C |
| Mass firing on inclined grate | - | All kind of odd sized fuels |
| Mass firing on pusher grate | - | All kind of odd sized fuels |
| Underfeed stoker firing | - | Used for rice husk , GN shell, saw dust |

## *CHOICE OF BOILER CONFIGURATION*

| | | |
|---|---|---|
| External Refractory furnace with shell Boiler | - | Not suitable for slagging fuels |
| Internal furnace shell boiler | - | Firewood , rice husk |
| Waterwall furnace chamber with shell boiler | - | Firewood, rice husk, GN shell |
| Waterwall furnace chamber with water tube boiler | - | Wood chips, rice husk, GN shell, |
| Waterwall furnace chamber with radiant | - | Non slagging / fouling fuels |

| | | |
|---|---|---|
| Superheater | | |
| Waterwall furnace chamber with convection superheater | - | Slagging fuels |
| Waterwall furnace with tail end superheater | - | Ideal for Slagging fuels |

Following are the some properties of fuels that affect the efficiency & availability of the boiler.

- Moisture content
- Ash fusion temperature
- Alkali content
- Chlorine content
- Fuel size
- Flow property
- Decay property

***MOISTURE CONTENT EFFECT ON BOILER EFFICIENCY & AVAILABILITY***

- This brings down the boiler efficiency – more fuel has to be burnt to account for evaporation of fuel moisture which leaves the boiler as a waste.
- We can choose to dry the fuel in sun light. But long term storage brings down the calorific value of the fuel. Part of the volatile matter leaves the fuel over a period.
- We can choose to stock the fuel in a well ventilated covered storage yard.
- Room heating is an option. Steam coil heaters can be used to bring down and maintain consistent moisture. Many small boiler users do this trick by stacking the wood logs in the boiler room.
- The fuel moisture creates flow problems in bunker. This leads to difficulty in maintaining an interrupted fuel feed to furnace. Fuel feed interruptions increases the fuel consumption.
- Fuel moisture leads to fungus growth and leads to lump formation. Calls for manpower to dislodge the fuel.
- The fuel moisture adds to flue gas moisture which condenses inside air preheater tubes and acts as nuclei for ash build up. Subsequently the tubes choke up calling for use of tube scale cutters. In case of gas over tubes, the gas flow path may be blocked.
- The fuel moisture adding to flue moisture condenses in pollution control equipment such as bag house / Electrostatic precipitator. The steel casing corrodes away in ESP.
- The fuel moisture adding to flue gas moisture condenses in chimney & idle gas ducting sharing the chimney. This corrodes the chimney and leads to sudden collapse of chimney. RCC chimney is preferred for agro fuels. Self supported steel chimneys are to be avoided.
- When the flue gas moisture leads to choking of the APH tubes, the furnace draft is affected. The required combustion air can not be given. Thus blue smoke is seen in chimney.
- Reduction in draft also leads to soot formation in furnace / duct / chimney and leads to black particulate emission.
- Reduction in draft leads to reduction in FD fan air flow and leads to grate bar burning.
- Moisture leads to APH tube failure at leads to direct passage of air in to the ID system. The furnace starves for air. The boiler capacity comes down. Many boiler users wonder how this could have such a pronounced effect.
- Increased moisture content disturbs the furnace condition. Higher moisture content will need more drying time. This will cause shifting of combustion zone to Superheater leading to high Steam temperature. In case of slagging fuels, the deposits accumulate and block the flue path. Boiler has to be taken for cleaning.
- Decreased moisture than design also disturbs the furnace in case of slagging fuel. The deposits build up in refractory walls of the furnace.
- Moisture pick up is faster in case the biomass gets trenched in rain.
- When the biomass is stored in pyramidal form, the pick up is less as the water runs down easily.

## *DEPOSITS IN BOILER HEATING SURFACE*

Deposit formation on heating surfaces is the biggest problem in biomass firing. Its effect is to lead to shut down of boiler due to draft problem (depending on boiler configuration) and the loss of steam generation. Damages may occur in some cases due to increased gas velocity when fouling takes place. Every fuel has a non-combustible mineral fraction which is converted to ash on combustion. Formations of deposits are due to fuel quality, boiler-design, boiler-operation and boiler-maintenance.

## *SLAGGING & FOULING*

Deposits can be classified as slagging & fouling. Slagging occurs in the boiler sections that are directly exposed to flame. Slagging is a mechanism of stickiness of ash, ash melting & sintering. Fouling is due condensation of volatile compounds in fuel over tubes in convective path. Fouling deposit is porous and easily removable. Combustor design and furnace design have to be based on feedback on operating experiences. Inspection windows are to be strategically located for physical observation of deposition while the boiler is running. Based on actual deposition pattern & operating conditions, design of future boilers must be done.

## *SLAGGING IN FURNACE*

Slagging is due to ash fusion. Stickiness begins with initial deformation temperature of ash. The ash fusion in furnace is controlled by disposition of waterwall tubes, furnace plan dimensions, furnace volume, fuel distribution inside furnace, fuel size, excess air, combustion technology and the way in which the air is thoroughly mixed with fuel while spreading the fuel inside the furnace.

- The fuel moisture also decides slagging to a large extent. Part of the furnace volume is used up for drying itself. The furnace outlet temperature shoots up and thus leading to slagging at superheater / boiler bank. Hence it is necessary to maintain fairly constant moisture content in fuel.
- Slagging occurs over convective tubes when the furnace exit temperatures are higher. Superheater tubes would be fouled with harder deposits which are not easily removed.
- When the ash melting temperatures are lower, parallel flow superheater is adopted. This ensures the superheater is not coated with ash.
- Un-cooled Superheater spacer clamps offer sites for ash. The design should avoid such details.
- Radiant superheater is susceptible for ash slagging, particularly when the furnace volume is inadequate. The furnace gas residence time of 2.5 second is adopted. In addition the waterwall heating surface should be adequate to cool the gas to a temperature decided by the slagging tendency.
- When the air flow through furnace gets reduced due to wrong operation of boiler / leakages in boiler roof / leakages in Airpreheater would lead to high combustion temperature and leads to ash slagging in furnace. There are many cases where the furnace behavior has been returned to original design condition only by attending the leakages.
- In general the ash fusion temperature of the biomass is low. The low ash fusion temperature is due to low melting alkali compounds with Potassium & Sodium radicals. This leads to sticky deposits on Superheater tubes and refractory furnace walls & uncooled metal spacers / alignment bands used in convection coils. The deposits are not easily removed. The best way to avoid is to place the convection heating surfaces after the flue gas is cooled below 650-700 deg C. However this is not being done by any manufacturer as the boiler cost goes up. A typical boiler configuration has at least three passes made out of waterwall, before the gas enters convection Superheater.
- The ash melting tendencies of ash is modifiable by using fire side additives. A separate feeding system is used to add the chemicals. This keeps the superheater cleaner as compared to a case without any fire side additive.

- Co-firing of agro fuels with coal or a combination of agro fuels is found to modify the characteristics of deposition of sticky fuels. For example it has been possible to use cotton stalk along with rice husk.
- Many boiler users have arrived at the optimum combination of fuels which would extend the periods between cleaning. Yet the best is possible if only boiler design is modified.
- Fly ash from coal fired units may help in modifying ash fouling pattern.

***FOULING ON CONVECTIVE SURFACES***

Fouling occurs due to condensation of volatile species. It is removed by a mechanism of rapping or blowing. If not done, the fouling keeps on building up until a maximum thickness is achieved. Fouling can be seen in the rear portion of Superheater tubes.

- Fouling is not seen in boiler bank tubes / Economiser tubes as the deposits get cooled to powdery nature and flue gas velocity is generally sufficient for a self cleaning action.
- Locating Superheater in low temperature region avoids the build of fouled deposits. Self cleaning action ensures the Superheater is free.
- High temperature superheater at furnace exit gets fouled first. Then the ash builds up over the fouled ash and offers still hotter surface. Dripping molten ash is seen in some Superheater.
- Soot blower positioning & sequencing are important for removing the fouling.
- Furnaces which have good temperature control will avoid the fouling of convective surfaces. AFBC & CFBC technologies have good furnace temperature control compared to others. Grate firing technologies do not have accurate control over furnace temperature. The only way to control furnace outlet temperature would be furnace dilution by cold secondary air.

***FOULING ON AIRPREHEATER SURFACES***

Fouling on air preheater surface occurs with a different phenomenon. As the flue gas moisture condenses, the ash gets cemented over the tube surface in cold sections of Airpreheater. When the gas flows over the tubes, the flue path may not be obstructed provided pitch is in excess of a minimum value. When the gas flows over the tube, the ash is able to plug the tubes easily. Many Airpreheater tubes are cleaned annually by high pressure water jets. Sometimes the ash will have to be drilled through. Excessive fuel moisture leads to quicker choking in Airpreheater. When the flue gas contains sulfur dioxide, tube gets eaten away faster. Otherwise the Oxygen and water condensation together leads to tube puncture by pitting corrosion.

- When the gas flow is over tubes, the choking of flue path can be prevented.
- By adopting air operated soot blower system / acoustic cleaning system, flue path choking can be prevented.
- Use of steam coil air preheater would delay the tube failures due to flue gas moisture condensation.
- Use of steam coil air preheater would also delay the ash plug formation inside the tubes.

***CHLORINE CORROSION***

- This is a very serious matter in case of Boilers with high temperature Superheater. All green leafy biomass would have what is known as Chlorophyll. The chlorine is found to corrode the Superheater sections. The Chorine converts the ferrous ions to ferrous chloride. There is no way combat this except we locate the Superheater coils with inlet gas at less than 650 deg C. sulfur injection is found to be a solution. Injection of sulfur to maintain S/Cl ratio at a value between 2 to 4 have been proved to reduce the corrosion effect. But the boiler tail end heating surface such as economizer & air preheater and flue gas cleaning equipments have to be designed for this.

- The main steam pressure should be limited to 460 deg C, if chlorine is found to be present in agro fuel. Cotton stalk, sugar cane thrash, bamboo trees are known for their chlorine content.
- It is necessary to analyze any new biomass to be fired. Once the damage is done it does not reverse unless the deposits are removed in dry form.
- Injection of fly ash from coal may modify the deposition of ash over superheater, but the same should have been commenced even before the Superheater is coated with potassium, sodium & chlorine containing biomass.
- In view of the above fact black recovery boilers are designed for Steam temperature of 485 deg C. Similarly Municipal waste fired boilers are designed for 450 deg C steam temperature with a pressure of 45 kg/cm2g. The boiler is not provided with Airpreheater.
- Chlorine is present in three forms, namely molecular chlorine, Hydrogen Chloride and alkali chloride. Corrosion by HCl is seen in reducing atmosphere in furnaces. Alkali chlorides have lower fusion temperature and thus after deposition in superheater, they dissolve the metal as chloride. It has been proved that FeCl2 again oxidizes and releases chlorine. Part of the chlorine releases goes back to metal to cause continuous corrosion.

***SIZING OF FUELS FOR BETTER AVAILABILITY OF BOILERS***

- Depending upon the combustion technology adopted the fuel needs to be sized. Handling the different fuels require different kind of equipments. For example tractor with grab buckets are used for picking and dropping the cotton stalk / wheat straw.
- Husk / GN shell / coffee husk / Saw dust / De-oiled bran is pushed in to hoppers by tractors equipped with pusher plate.
- Oversized fuels have been notorious for tripping the fuel feeders. Secondary sizing equipment would be necessary.
- When the fuel is made uniformly small the handling becomes simpler. Yet many manufacturers ignore this.
- Oversized fuels reduce the availability of the boiler due to disturbances in fuel feeding. Steam pressure and steam temperature fluctuation and loss of steam generation have been seen in Industry. Silos and drum feeders adopted for bagasse can be used for other fuels if the secondary size reduction is addressed with respect to biomass.
- Foreign material such as stone had been of great problem with rice husk / Groundnut shell. Screening is a must to remove oversized stones.
- Iron piece coming with fuel trip / damage the fuel feeding system. Long wires, nails have been notorious in causing damage to traveling grate components. Magnetic separator is to be installed in feeding conveyor.
- Fuels that need sizing must be done when it is green. This is important to save chipping power. Processing after drying would call for more power.

***FLOW PROPERTY DISTURBING THE BOILER OPERATION***

- Of all the biomass fuels, rice husk has the best flowability. Thus the boiler with this fuel is provided with bunker. It is a practice to blend some fuels like saw dust, Ground nut shell with rice husk.
- Other fuels can also be stored & fired in system such as silo & drum feeders. But uniformity in size is important.
- Smaller hoppers must be used at boiler end to minimize the troubles due to fuel flow problems.

***DECAY PROPERTY CAUSING MORE FUEL CONSUMPTION***

- Being organic fuel, presence of moisture can lead to decay of the biomass fuels. It is important to avoid dead storage. The fuels should be consumed as much as possible from bottom. We may

implement expiry date system to avoid unnecessary decaying of biomass. As the decay takes place the hydro carbons leave in the gaseous form. The useful calorific value is lost.

- Ventilated but covered storage is required during rainy season. Closed room drying is preferred to bring down the fuel moisture.

### *CARRYOVER OF WATER TO SUPERHEATER*

- When the fuel feed can not be properly regulated the steam generation is reduced. As the steam drawal continues, it leads to water level fluctuation leading to carryover. It is not possible to maintain drum level with erratic fuel feed.
- Fuel silos system is required to avoid this.
- When the carryover is present, the high TDS water gets carried to Superheater. As the dissolved solids get deposited, the Superheater gets heated locally, leading to long term / short term overheating failure.

### *SHELL TUBE CHOKING*

- Shell tube boiler is not a right choice for fuels which have low ash fusion temperature. The First pass tubes often get choked and cleaning is resorted to. This is a great disturbance for plants. Water tube configuration is the right choice.
- Again adequate radiant furnace area must be provided before a convection bank is arranged. The deposits over the tubes do not lead to boiler stoppage.
- Sonic soot blowers or steam operated soot blowers can be used when the gas flows over tubes. But when gas flows inside tubes only sonic systems are usable.

### *CONCLUSION*

There is a need to review the boiler design for improved boiler availability. Boiler outages on account of ash slagging & fouling must be avoided. An update of boiler design in Europe needs to be understood.

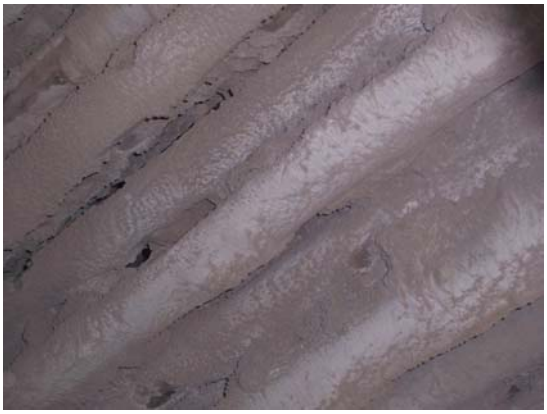

Photo 1: Ash deposition over tubes

Photo 2: Flue gas moisture condensation inside duct

Photo 3: Ash build up due to moisture condensation inside APH tubes

Photo 4: APH metal loss due to moisture condensation

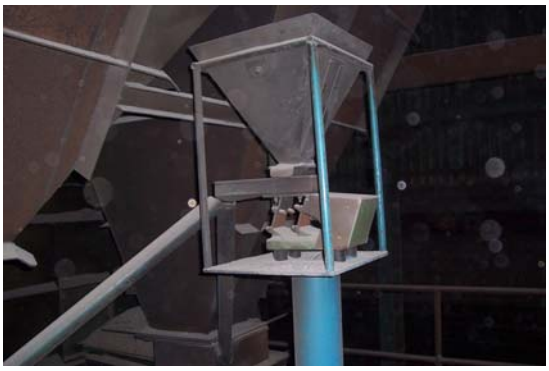

Photo 5: Fire side additive feed arrangement.

Photo 6: Ash build up over superheater due to inadequate furnace volume / water wall.

Photo 7: Ash deposition over tubes

Photo 8: Fouling & corrosion over superheater

Photo 9: Furnace ash slagging since the waterwall surface is in adequate.

Photo 10: frequent shell tube cleaning calls for disturbance in plant.

Photo 11: Ash builds up on convective Surface – inadequate furnace volume

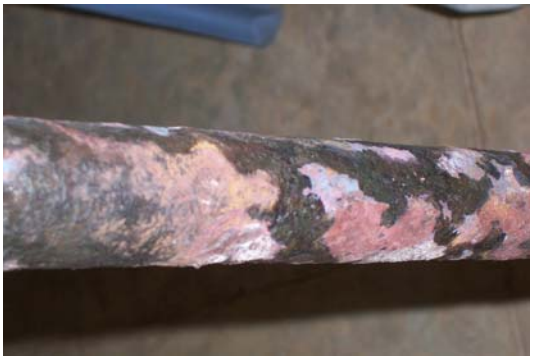

Photo 12: Superheater tube corrosion due to alkaline chloride corrosion.

Photo 13: oversized wood chips – cause interruption in fuel feeding

Photo 14: A clean furnace with bagasse as fuel.

Photo 15: Corn cobs cause fouling in furnace. Furnace must have water wall without refractory.

Photo 16: Ash molten in furnace due in adequate furnace size & waterwall surface.

Photo 17: Poor fluidization in furnace - mal-operation

Photo 18: Air ingress from roof in a boiler designed for paper mill.